Dec. 27, 1949 A. HEURTIER 2,492,696

PHOTOGRAPHIC SOUND REPRODUCING HEAD

Filed June 5, 1947 4 Sheets-Sheet 1

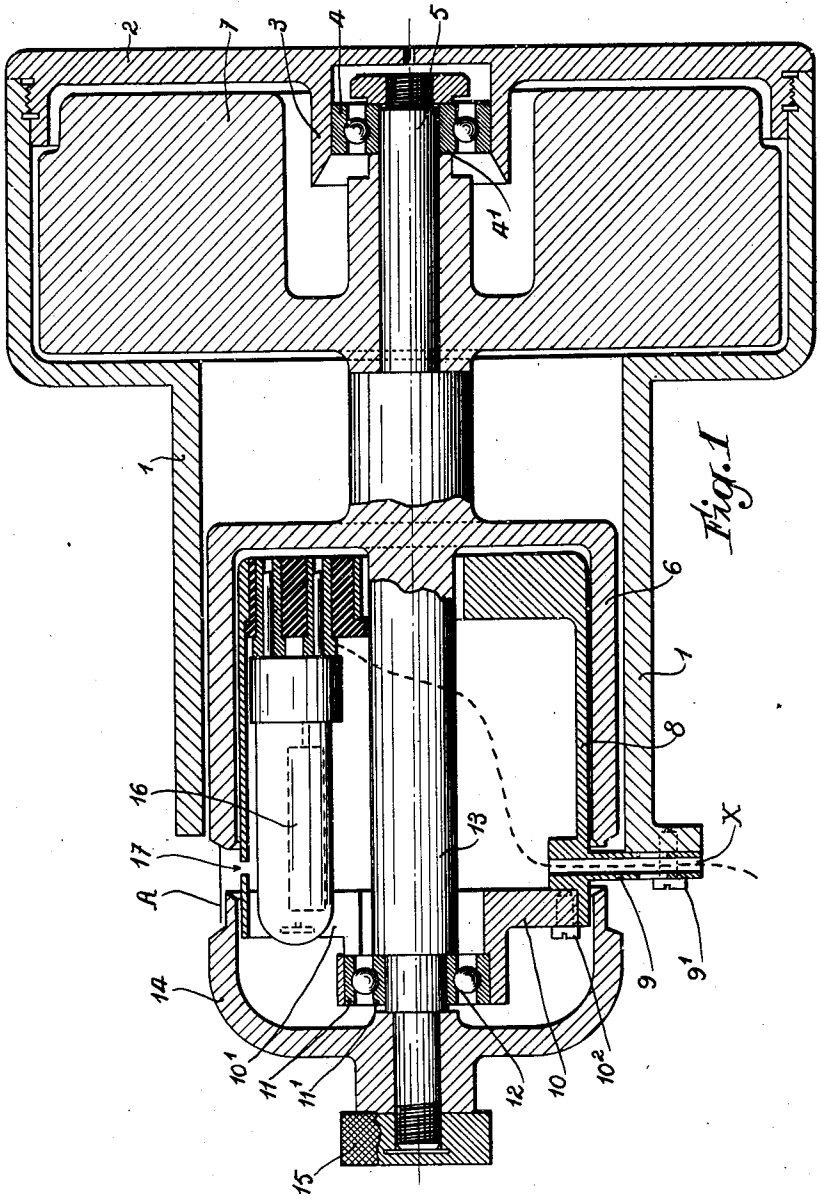

Fig. 1

INVENTOR.
Antoine Heurtier
BY
Attorneys

Dec. 27, 1949 A. HEURTIER 2,492,696

PHOTOGRAPHIC SOUND REPRODUCING HEAD

Filed June 5, 1947 4 Sheets-Sheet 2

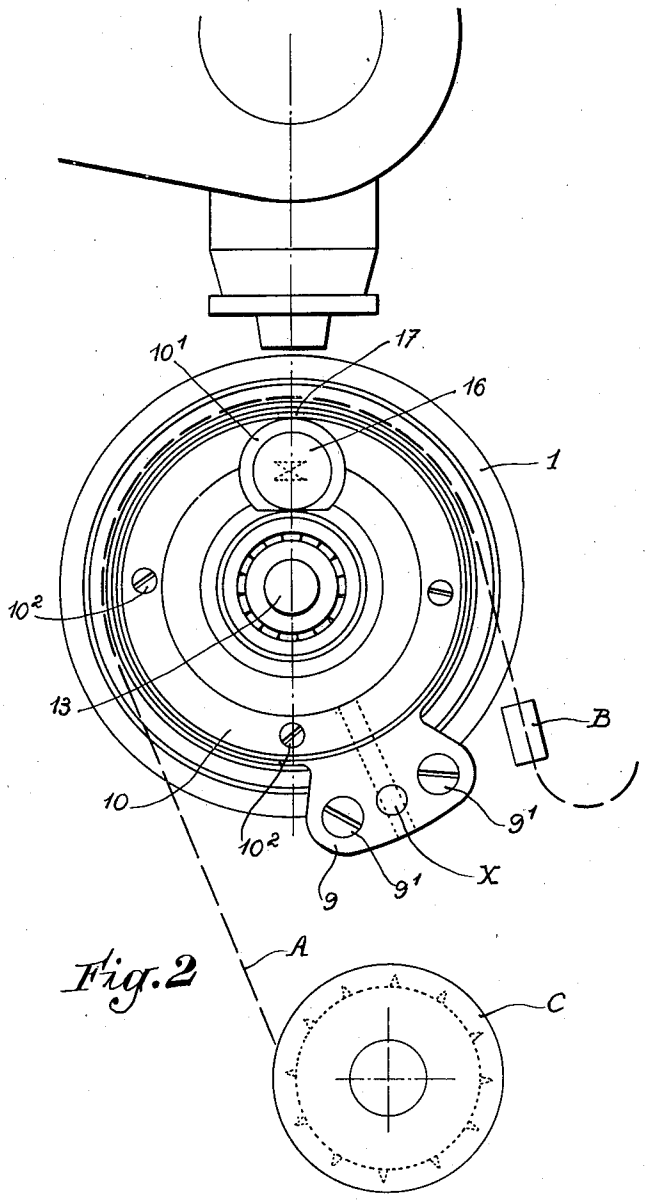

Fig. 2

INVENTOR.
Antoine Heurtier
BY
Alexander & Dowell
attorneys

Dec. 27, 1949 A. HEURTIER 2,492,696

PHOTOGRAPHIC SOUND REPRODUCING HEAD

Filed June 5, 1947 4 Sheets-Sheet 3

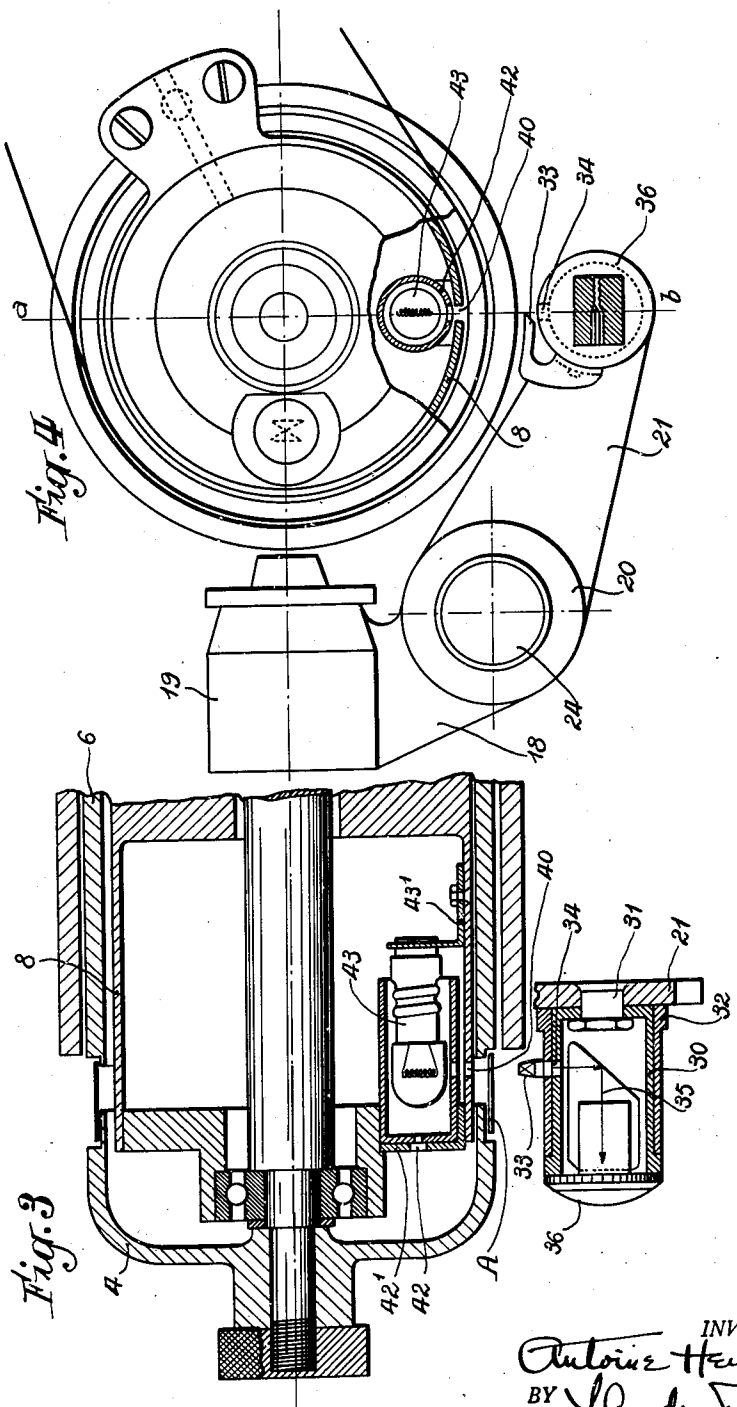

INVENTOR.
Antoine Heurtier
BY Alexander & Dowell
attorneys

Dec. 27, 1949 A. HEURTIER 2,492,696

PHOTOGRAPHIC SOUND REPRODUCING HEAD

Filed June 5, 1947 4 Sheets-Sheet 4

Fig. 8

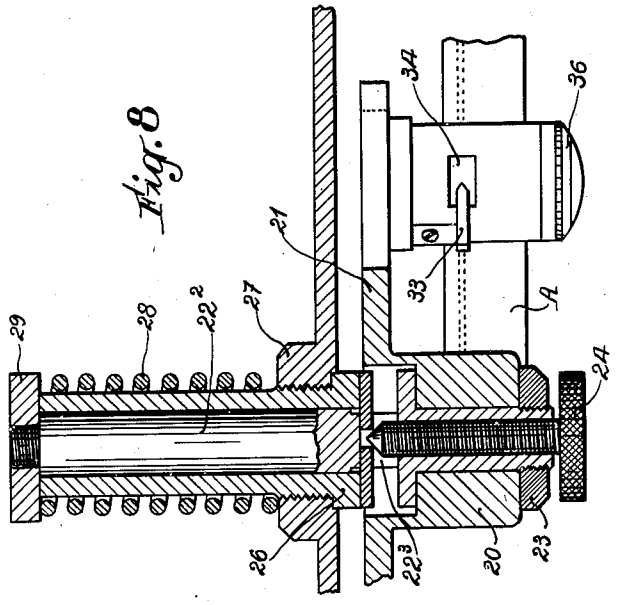

Fig. 7

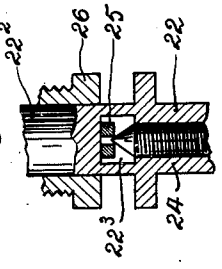

Fig. 6

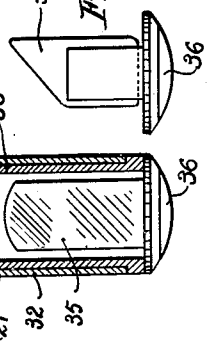

Fig. 5

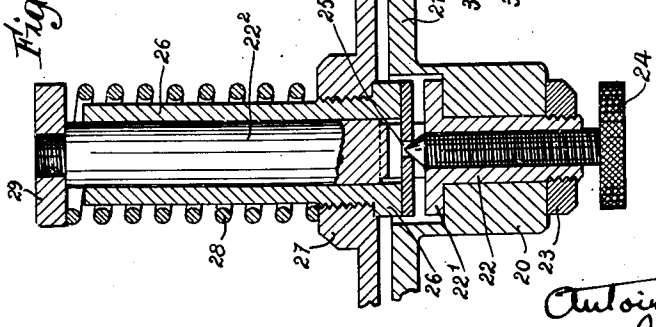

INVENTOR.
Antoine Heurtier
BY
Attorneys

Patented Dec. 27, 1949 2,492,696

UNITED STATES PATENT OFFICE

2,492,696

PHOTOGRAPHIC SOUND REPRODUCING HEAD

Antoine Heurtier, Saint-Etienne, France

Application June 5, 1947, Serial No. 752,766
In France June 8, 1944

4 Claims. (Cl. 179—100.3)

Section 1, Public Law 690, August 8, 1946
Patent expires June 8, 1964

1

My invention relates to sound reproducing devices used in connection with cinematograph film projecting apparatus.

A first object of my invention is to obtain a smooth running of a cinematographic film provided with the conventional sound track.

Another object of my invention is to provide a sound reproducing device wherein the transverse position of the beam of light adapted to impress the photo-electric cell through the sound track may be correctly adjusted with respect to the film in order to avoid undesirable noises.

A further object of my invention is a device comprising a drum made in two parts separated by a free cylindrical space, the film being wound over the said free space, while the photo-electric cell is fixed within the drum.

Still a further object of my invention is a device of the character above-defined, wherein the two parts are bell-shaped and are carried by a common shaft in opposed respective relation, while the photo-electric cell is carried by an inner support itself supported by the fixed frame or casing through an intermediate member passed through the free space provided between the two parts of the drum.

In the annexed drawings:

Fig. 1 is a general longitudinal section of a sound reproducing device according to my invention.

Fig. 2 is an end view thereof to a reduced scale, the drum being supposedly open (i. e. its forepart being removed).

Fig. 3 is a fragmental longitudinal section of a modification comprising means to observe the transverse position of the beam of light on the film.

Fig. 4 is the corresponding end view with the drum supposedly open.

Fig. 5 is an enlarged longitudinal section of the adjusting gear for the optical devices producing the beam of light.

Fig. 6 is a side view of the arrangement of prism and lens permitting observation of the controlling pointer with respect to the film.

Fig. 7 is a fragmental section similar to Fig. 5, but illustrating the parts at another position.

Fig. 8 shows the arrangement of the pointer.

In Figs. 1 and 2, numeral 1 designates a fixed casing provided with an end cover 2 carrying a central boss 3 adapted to house a ball bearing 4 having its inner ball race 4^1 mounted on a shaft 5 in one with a bell-shaped member 6 and with a heavy flywheel 7. As indicated, member 6 opens outwardly with respect to flywheel 7.

2

Member 6, which rotates with shaft 5, houses a fixed hollow support 8 connected with casing 1 by means of a tray 9 clamped by screws 9^1. Support 8, which is substantially cylindrical, is closed beyond the open end of member 6 by an end cover 10 fixed by means of screws 10^2. And cover 10 carries axially a ball bearing 11, the inner ball race 12 of which is fixed on a shouldered portion 11^1 of an extension 13 of shaft 5.

It will be seen that the rotating part, i. e. shafts 5 and 13 together with flywheel 7 and member 6, are supported by materially spaced bearings, which ensures smooth running and avoids misalignments and vibrations.

Shaft 13 receives at its outer end a bell-shaped cover 14 fixed thereon by a blind nut 15. Cover 14 opens towards member 6 and it has the same external diameter. It is spaced from drum 6 and stay 9 is passed through the relatively narrow free intermediate space, as indicated. Cover 14 is supposedly removed in Fig. 2.

The photo-electric cell 16 is carried by support 8 within drum 6, as illustrated, the end cover 10 being provided with an opening 10^1 to permit of introducing or removing cell 16. The conductor leading to cell 16 is passed through a hole x provided through stay 9.

Member 6 and cover 14 may be regarded as forming a single drum and a film A (Fig. 2), driven by a toothed roller C, passes over the cylindrical free spaced provided between the two parts, as indicated in Fig. 1. The film is slightly braked by an appropriate device B (Fig. 2) of any description. A slit 17 (Fig. 1) is provided in the periphery of support 8 to afford a passage for the light beam towards cell 16 in the mean transverse plane of the intermediate space between parts 6 and 14.

In the modified construction of Figs. 3 to 8, means are provided to permit of accurately adjusting the optical devices associated with the apparatus described, with respect to the sound track of the film.

There is provided a support 18 (Fig. 4) for the optical device associated with the photo-electric cell, the said support being provided with a boss 20 and with an arm 21. Boss 20 houses a rod 22 (Fig. 5) provided with a shoulder 22^1. A nut 23 is screwed on the end of rod 22 which is thus fixed to boss 20 as illustrated.

The portion of rod 22 comprised between shoulder 22^1 and its threaded end is hollow and accommodates an axial adjusting screw 24 the inner end of which bears against a transverse bar

25 passed through a transverse opening 22^3 provided through rod 22 (Figs. 5 and 7).

The portion 22^2 of rod 22 opposed to boss 20 is unperforated and is slidable within a tubular member 26 screwed in the main frame 27 of the apparatus. A compression spring 28 is disposed around member 26 and acts on a nut 29 screwed on the outer end of portion 22^2.

It will be observed that opening 22^3 is materially wider in axial direction than the thickness of bar 25. It will also be remarked that spring 28 tends to move nut 29 upwardly in Fig. 5. Screw 24 is thus pressed against bar 25, the latter resting against the shouldered end of member 26. Actuation of screw 24 therefore permits of adjusting the position of boss 20 and of support 18, as illustrated by Figs. 5 and 8.

The above-mentioned arm 21 carries a socket 30 (Fig. 5) fixed by a bolt 31, and a ring 32 is rotatably mounted on socket 30, such ring carrying a pointer 33 (Fig. 8), the end of which is disposed in front of two openings 34 provided through socket 30 and ring 31 (Fig. 3). An optical prism 35 is disposed within socket 30, such prism being carried by a lens 36 forming a cover for the said socket (Fig. 6).

The other parts of the apparatus are similar to those already described with reference to Figs. 1 and 2, but support 8 is perforated at 40 (Fig. 3) in front of the sound track of the film A and it carries a closed casing 42 supported by an angle member 42^1; an electric bulb 43 is disposed within casing 42 and the latter is perforated in front of hole 40, as shown.

The operator observes through lens 36 and prism 35 the sound track and pointer 33, and by means of screw 24 he brings them in registration with each other. As above explained, actuation of screw 24 causes support 18 and extension 21 to move axially, whereby pointer 33 may be brought to the proper position with respect to film A. At the same time, the optical device 19 is moved axially and things are so arranged that when pointer 33 is just in front of the sound track, the light beam from device 19 is correctly adjusted for satisfactory sound reproduction, which means that pointer 33 and device 19 are in the same transverse plane.

I claim:

1. In a sound reproducing device for a cinematographic film having a sound track, a casing; a shaft rotatably supported by said casing at one of its ends; a first bell-shaped member carried by said shaft co-axially thereto, said member opening outwardly with respect to the end of said shaft supported by said casing; a second bell-shaped member removably fixed on the end of said shaft which is not supported by said casing, said second-named bell-shaped member opening towards said first-named bell-shaped member and having its edge spaced from the edge of said first-named bell-shaped member to form an intermediate space having a width which is less than the width of the film to be reproduced, said second-named bell-shaped member being adapted to form with said first-named bell-shaped member a drum whereon the film is passed with its sound track on said intermediate space; means carried by said casing externally to said members to project a beam of light through said intermediate space in a substantially radial direction with respect to said members; a support internal to said members to carry a photo-electric cell adapted to receive said beam of light; means passing through said intermediate space to fix said internal support to said casing; and means on said internal support to rotatably carry said shaft in the vicinity of its end which is not supported by said casing.

2. In a sound reproducing device for a cinematographic film having a sound track, a pair of rotatable co-axial bell-shaped members opening towards each other with their edges longitudinally spaced from each other to form an intermediate space having a width which is less than the width of the film to be reproduced, said members being adapted to form a drum whereon the film is wound with its sound track on said intermediate space; means to rotatably support said members while connecting same with each other; a support external to said members and slidable in a direction substantially parallel to the axis of said members; means to displace said support; means on said support to project a beam of light through said intermediate space in a direction substantially radial to said members; a support internal to said members to carry a photo-electric cell adapted to receive said beam of light through said intermediate space, and also a source of light of reduced dimensions adapted to be disposed in a transverse plane passing through said intermediate space; means passing through said intermediate space to support said internal support; light-reflecting means on said external support to receive light from said source in a direction substantially radial with respect to said members and to reflect said light in a direction substantially parallel to the axis of said members; and means carried by said external support and interposed between said source and said light-reflecting means and adapted to appear in the center of said source of light when said light-projecting means are in the mean plane of said sound track.

3. In a sound reproducing device as claimed in claim 2, said external support being carried by a rod parallel to the axis of said members and longitudinally slidable in said casing, said rod being provided with a transverse opening and with a threaded axial bore; and said means to displace said support comprising a bar passed through said opening with its ends resting against said casing, a screw screwed through said threaded bore and resting against said bar, and spring means acting axially on said rod to press said screw against said bar and said bar against said casing.

4. In a sound-reproducing device for a cinematographic film having a sound track, a pair of rotatable co-axial bell-shaped members opening towards each other with their edges longitudinally spaced from each other to form an intermediate space having a width which is less than the width of the film to be reproduced, said member being adapted to form a drum whereon the film is wound with its sound track on said intermediate space; means to rotatably support said members while connecting same with each other; a support external to said members and slidable in a direction substantially parallel to the axis of said members; means to displace said support; means on said support to project a beam of light through said intermediate space in a direction substantially radial to said members; a support extending into said members through said space and carrying therewithin a photo-electric cell adapted to receive said beam of light through said intermediate space, and also carrying a source of light of reduced dimensions adapted to be disposed in a transverse plane passing through said itermediate space the light

shining outwardly through said space; and sighting means carried by said external support opposite said internal source of light to permit observation of the position thereof with respect to the portion of the film lighted by said source of light through said intermediate space.

ANTOINE HEURTIER.

REFERENCES CITED

The following references are of record in the file of this patent:

UNITED STATES PATENTS

Number	Name	Date
1,807,409	Hoxie	May 26, 1931
1,839,037	Kellogg	Dec. 29, 1931
2,014,537	Page	Sept. 17, 1935
2,069,137	Esdaile	Jan. 26, 1937
2,085,900	Collins	July 6, 1937
2,100,751	Runge	Nov. 30, 1937
2,261,410	Perez	Nov. 4, 1941
2,285,975	Hubschmid	June 9, 1942