Feb. 6, 1968 W. A. RACINE 3,367,195

MECHANICAL MOVEMENT

Filed May 23, 1966 2 Sheets-Sheet 1

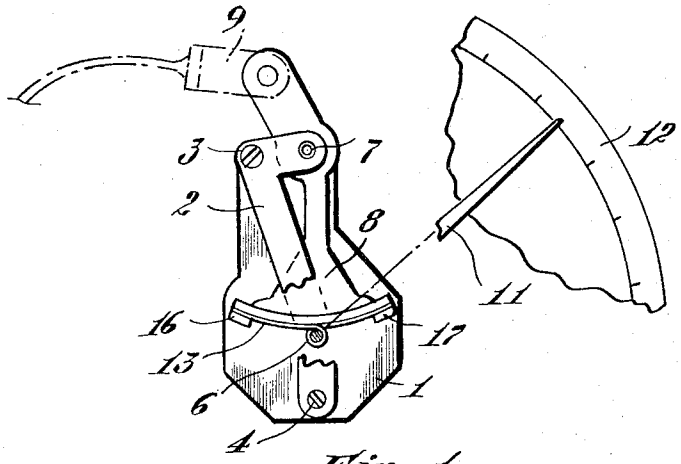

Fig. 1

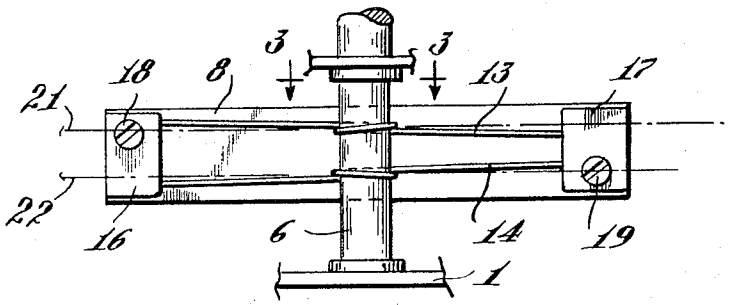

Fig. 2

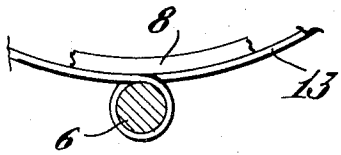

Fig. 3

INVENTOR.
William A. Racine
BY
Roberts, Cushman & Grover
ATT'YS

Feb. 6, 1968 W. A. RACINE 3,367,195

MECHANICAL MOVEMENT

Filed May 23, 1966 2 Sheets-Sheet 2

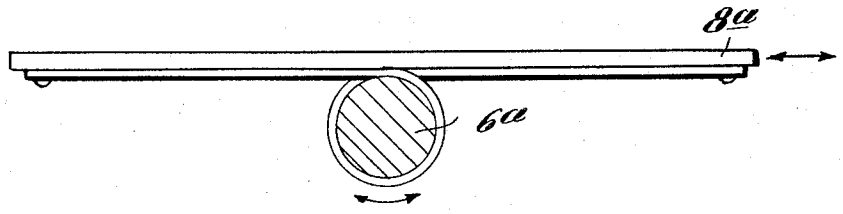

Fig. 4

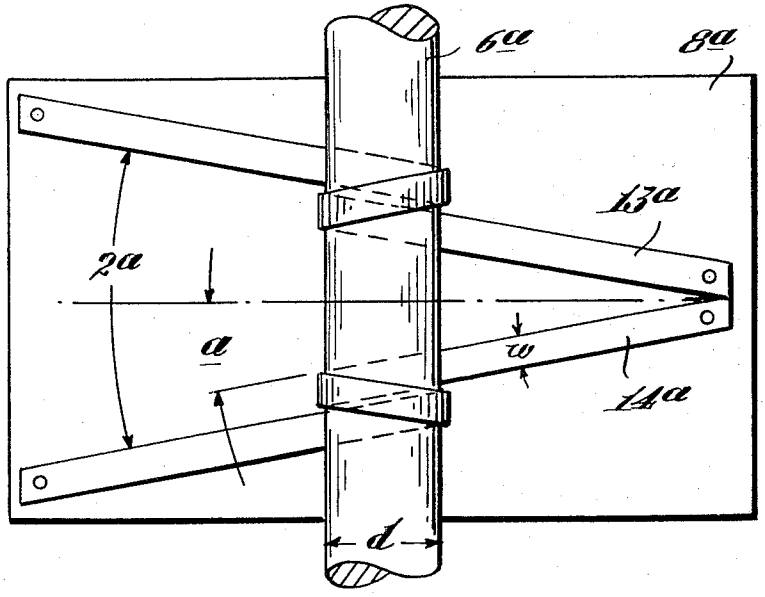

Fig. 5

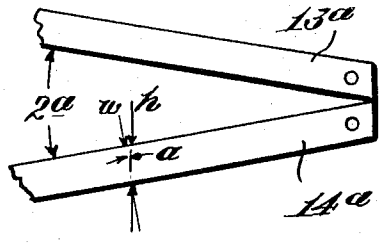

Fig. 6

United States Patent Office 3,367,195
Patented Feb. 6, 1968

3,367,195

MECHANICAL MOVEMENT

William A. Racine, Bridgewater, N.H.
(P.O. Box E, Bristol, N.H. 03222)

Continuation-in-part of application Ser. No. 318,737, Oct. 24, 1963. This application May 23, 1966, Ser. No. 575,197

4 Claims. (Cl. 74—89.2)

This application is a continuation-in-part of application Ser. No. 318,737, filed Oct. 24, 1963, now abandoned.

This invention relates to mechanical movements of the type in which a rotor is driven by an oscillator through the medium of a belt in the form of a filament, string, wire, cable or other flexible connector. The rotor may comprise a shaft and the oscillator a drum. The periphery of the drum may extend through 360° or through only a segment of lesser extent and the belt has at least one complete turn around the shaft. In the case of a complete drum the belt may extend all the way around the drum and may or may not be attached to the drum at some point around its circumference. In the case of a segmental drum or reciprocating oscillator the belt is attached to the oscillator on opposite sides of the shaft. While the shaft may drive the oscillator, ordinarily the oscillator drives the shaft as in the case of a pressure gauge where the drum is actuated by a Bourdon tube and the shaft actuates a pointer.

Objects of the invention are to provide a movement of the type referred to which is simple and economical to produce, which is free from slippage, which has minimum friction, which produces no end thrust on the rotor, and which is durable and reliable in use.

According to this invention the movement comprises a shaft and an oscillator having a surface movable back and forth transversely of the shaft tangentially to the shaft, two belts each having a turn around the shaft with portions extending along the oscillator on each side of the shaft, said turns spiraling in opposite directions axially of the shaft so that the inner ends of the turns are closer together than the outer ends of the turns, the outer ends of the portions extending from said inner ends of the turns being connected to the oscillator at one pair of points and the outer ends of the portions extending from said outer ends of the turns being connected to the oscillator at a second pair of points farther apart than the other two points so that said portions are disposed at an angle to each other on both sides of said shaft, thereby to prevent the overlapping parts of each turn from rubbing on each other. The periphery of said shaft should be unobstructed adjacent said turns so that the turns may spiral back and forth lengthwise of the shaft as the oscillator moves back and forth. The sine of half said angle should be at least as great as the belt width divided by pi times the diameter of said shaft.

In a more specific aspect the movement comprises a rotor and a shaft having substantially parallel axes and a belt having a turn around the shaft with portions extending circumferentially of the rotor on each side of the shaft, the belt extending around the shaft spirally with adjacent parts of the spiral spaced apart to avoid friction between the parts. Preferably the peripheries of the rotor and shaft are substantially tangent so that the belt bears on the rotor from the line of tangency in each circumferential direction along the rotor, and the aforesaid portions of the belt are attached to the rotor on opposite sides of a plane perpendicular to the axis of the shaft at the aforesaid turn. In the preferred embodiment there are two belts and said portions of each belt are attached to the rotor at points on opposite sides of a plane perpendicular to the shaft at said turn and the points of attachment of corresponding

portions of the two belts are located approximately equal distances on opposite sides of the planes respectively.

For the purpose of illustration typical embodiments of the invention are shown in the accompanying drawings in which

FIG. 1 is a front view of a pressure gauge embodying the invention;

FIG. 2 is a bottom plan view of the gauge;

FIG. 3 is a section on the line 3—3 of FIG. 2;

FIG. 4 is a view like FIG. 1 showing a modification;

FIG. 5 is a view of the modification like FIG. 2; and

FIG. 6 is a diagrammatic view of the angle between the belts.

The particular embodiment of the invention shown in FIGS. 1 to 3 comprises a back plate **1** and a front L-shaped strap **2** secured to the back in spaced relation thereto by means of screws **3** and **4**. A shaft **6** is journaled in the back **1** and strap **2**. Pivotally mounted on shaft **7** between the back **1** and strap **2** is a segmental rotor **8** connected at its upper end to a Bourdon tube **9**. Fast to shaft **6** is a pointer **11** movable over a dial **12**.

According to this invention two belts **13** and **14** each has one turn around the shaft **6** with portions extending circumferentially of the rotor on each side of the shaft, these portions being attached to the rotor by clamps **16** and **17** secured by screws **18** and **19**. As shown in FIG. 1 the axes of the shaft **6** and rotor **8** are parallel and as shown in FIG. 3 the shaft and rotor are substantially tangent so that the belt bears on the rotor from the line of tangency in each circumferential direction along the rotor. As shown in FIG. 2 the aforesaid portions of each belt are attached to the rotor at points on opposite sides of a plane perpendicular to the shaft at the turn around the shaft. In FIG. 2 the two planes are indicated by broken lines **21** and **22**. From this figure it is evident that the portions of the two belts on each side of the shaft are located equal distances on opposite sides of the planes respectively. Thus the right-hand portion of belt **13** is below the plane **21** and the corresponding portion of belt **14** is above the plane **22**, while the left-hand portion of belt **13** is above the plane **21** and the left-hand portion of belt **14** is below the plane **22**. By inclining the belts relatively to the shaft as aforesaid each belt extends spirally around the shaft so that the adjacent parts of each spiral are spaced apart to avoid friction between the parts, and by inclining the two belts in opposite directions the end thrust of one belt on the shaft counteracts the end thrust of the other belt.

The modification shown in FIGS. 4 to 6 is like that shown in FIGS. 1 to 3 except in that the oscillator **8***a* is straight instead of curved and it reciprocates lengthwise instead of rotating about an axis and in that the belts **13***a* and **14***a* are flat instead of cylindrical.

In FIGS. 5 and 6 w is the width of the belts, h is the dimension of the belts parallel to the axis of the shaft **6***a* and a is one-half the angle between the belts. The overlapping parts of each belt turn are prevented from rubbing one each other by making the angle between the belts at least sufficiently large that the sine of half the angle is equal to the width of the belts divided by the diameter of the shaft times pi

$$\left(\text{sine } a=\frac{w}{\pi d}\right)$$

For example, with a belt one-quarter inch wide, the angle should be at least 6.1° for a and 12.2° between the belts with a three-quarter inch shaft and at least 18.6° for a and 37.2° between the belts with a one-quarter inch shaft. In other words the lead of each helix should be greater than the width of the belt.

From the foregoing it will be evident that, as shown in FIGS. 2 and 5 the aforesaid turns spiral in the same

direction circumferentially of the shaft but in opposite directions axially of the shaft so that the inner ends of the turns are closer together than the outer ends of the turns, the oscillator and shaft being substantially tangent to each other and said portions bearing on the oscillator from the line of tangency in each circumferential direction along the oscillator, said portions being attached to the oscillator at points on opposite sides of a plane perpendicular to the shaft between said turns.

It should be understood that the present disclosure is for the purpose of illustration only and that this invention includes all modifications and equivalents which fall within the scope of the appended claims.

I claim:

1. A mechanical movement comprising a shaft and an oscillator having a surface movable back and forth transversely of the shaft tangentially to the shaft, two belts each having a turn around the shaft with portions extending along the oscillator on each side of the shaft, said turns spiraling in opposite directions axially of the shaft so that the inner ends of the turns are closer together than the outer ends of the turns, the outer ends of the portions extending from said inner ends of the turns being connected to the oscillator at one pair of points and the outer ends of the portions extending from said outer ends of the turns being connected to the oscillator at a second pair

of points farther apart than the other two points so that said portions are disposed at an angle to each other on both sides of said shaft, thereby to prevent the overlapping parts of each turn from rubbing on each other.

2. A mechanical movement according to claim 1 wherein the periphery of said shaft is unobstructed adjacent said turns so that the turns may spiral back and forth lengthwise of the shaft as said oscillator moves back and forth.

3. A mechanical movement according to claim 1 wherein the sine of half said angle is at least as great as the belt width divided by pi times the diameter of said shaft.

4. A mechanical movement according to claim 3 wherein the periphery of said shaft adjacent said turns is unobstructed so that said turns may spiral back and forth lengthwise of the shaft as said oscillator moves back and forth.

References Cited

UNITED STATES PATENTS

1,263,404	4/1918	Green	78—89.2
2,195,400	4/1940	Arens	74—501
2,948,887	8/1960	Mounteer et al.	
3,204,472	9/1965	Gorgens et al.	74—89.2

MILTON KAUFMAN, *Primary Examiner.*