(No Model.) 2 Sheets—Sheet 1.

A. G. HART.

INFORMATION SLOT MACHINE.

No. 456,566. Patented July 28, 1891.

Fig-8-

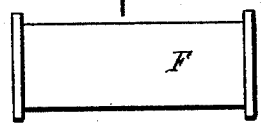

Fig-1-

Fig-2-

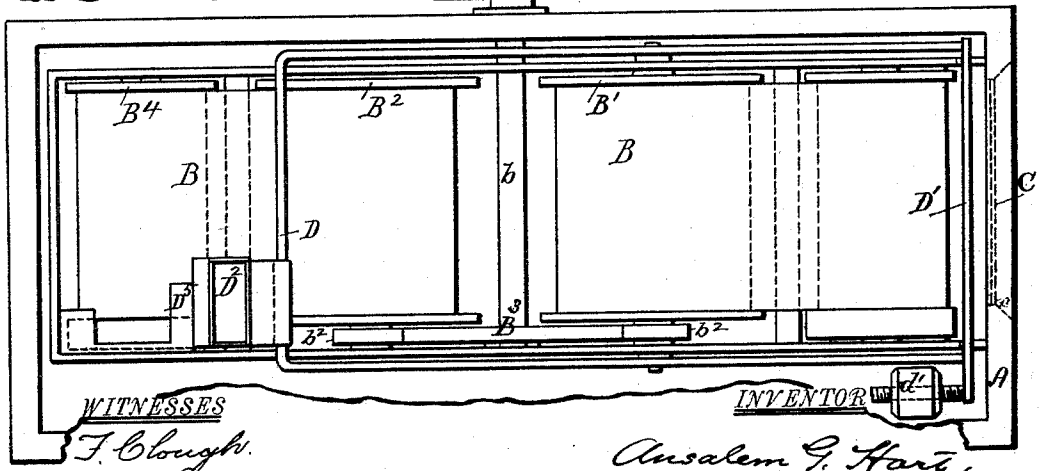

WITNESSES

T. Clough.

M. A. Reeve

INVENTOR

Ansalem G. Hart.

By W. W. Leggett.

Attorneys.

THE NORRIS PETERS CO., PHOTO-LITHO., WASHINGTON, D. C.

(No Model.) 2 Sheets—Sheet 2.

A. G. HART.

INFORMATION SLOT MACHINE.

No. 456,566. Patented July 28, 1891.

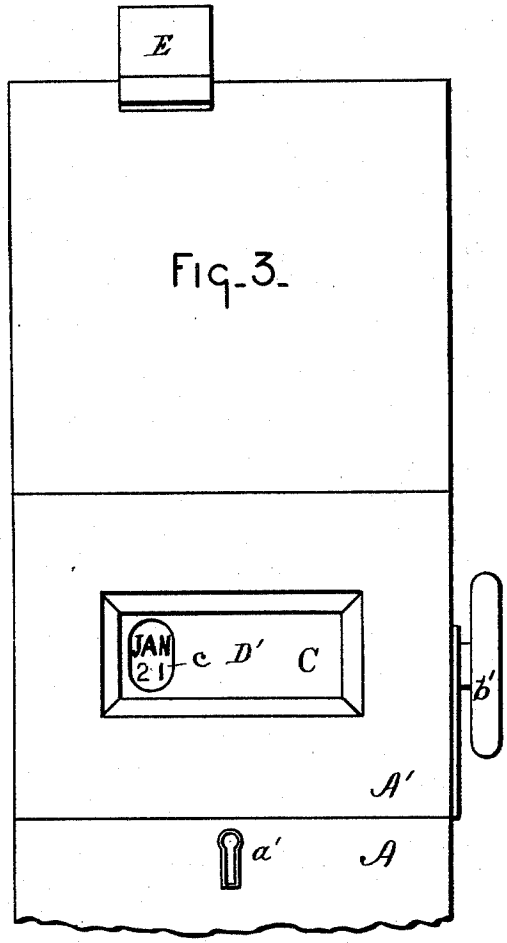

Fig. 3.

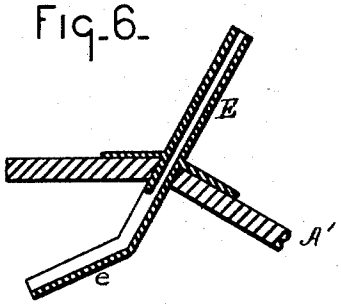

Fig. 6.

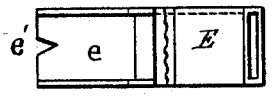

Fig. 7.

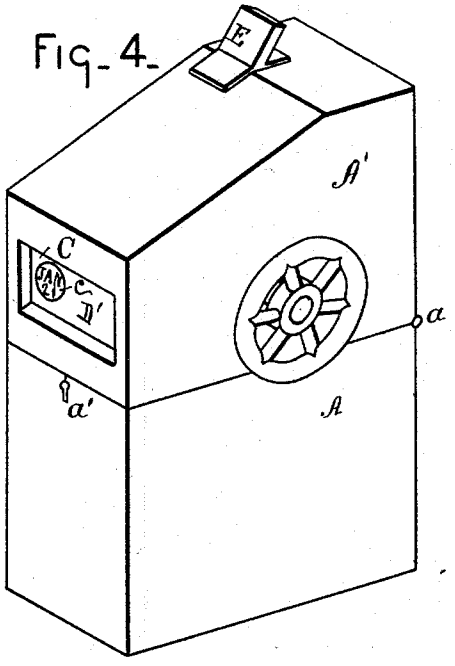

Fig. 4.

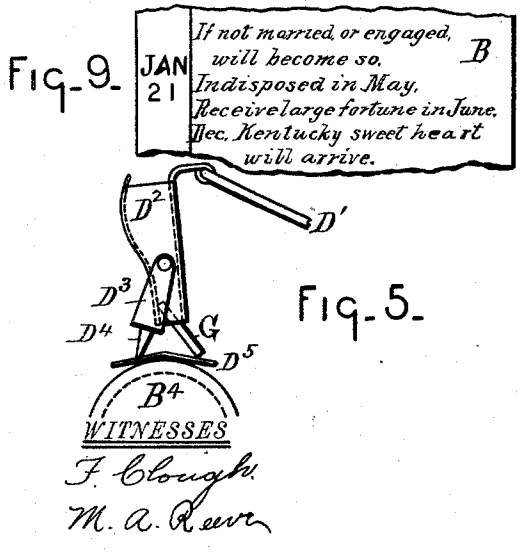

Fig. 9. Fig. 5.

WITNESSES

F. Clough.

M. A. Rewn

INVENTOR

Absalom G. Hart,

By W. W. Leggett.

Attorneys.

THE NORRIS PETERS CO., PHOTO-LITHO., WASHINGTON, D. C.

UNITED STATES PATENT OFFICE.

ANSALEM G. HART, OF DETROIT, MICHIGAN.

INFORMATION SLOT-MACHINE.

SPECIFICATION forming part of Letters Patent No. 456,566, dated July 28, 1891.

Application filed January 9, 1891. Serial No. 377,246. (No model.)

To all whom it may concern:

Be it known that I, ANSALEM G. HART, a citizen of the United States, residing at Detroit, county of Wayne, State of Michigan, have invented a certain new and useful Improvement in Information Slot-Machines; and I declare the following to be a full, clear, and exact description of the same, such as will enable others skilled in the art to which it pertains to make and use the same, reference being had to the accompanying drawings, which form a part of this specification.

In the drawings, Figure 1 is a view in elevation of an apparatus embodying my invention, with the adjacent face removed, so as to illustrate the operative mechanism. Fig. 2 is a plan view of the same with the top removed, showing the operative parts. Fig. 3 is an end elevation of the apparatus. Fig. 4 is a perspective view. Fig. 5 is a separate view illustrating the hopper in the operation of discharging the money therefrom. Fig. 6 is a separate view of the slot into which the money is dropped. Fig. 7 is a plan view of the same. Fig. 8 is a separate view of the roller for taking up the slack in the ribbon. Fig. 9 represents a section of the ribbon.

It is the purpose of my invention to produce a slot-machine of that type designed to operate when a piece of money is dropped into a slot, and which shall produce before the operator the information which he seeks—as, for instance, a forecast of the events he may look to transpire within the year next following his birthday.

The invention consists, essentially, in a ribbon having printed upon its face dates corresponding with every day in the year and opposite said date a printed statement of circumstances and events, the device being so constructed that a person desiring to ascertain the events relating to himself during the year next following his birthday may turn the machine in one direction or another until the date corresponding with his birthday is displayed at an indicating-glass. Then by dropping the proper coin into the slot an obscuring-shield shall be displaced, thus exposing at the same or another indicating-glass the information corresponding with the said date, and a construction whereby any further movement of the ribbon shall serve to replace the obscuring-shield until it may be again raised by another coin.

In carrying out my invention, A represents a suitable case or shell preferably provided with a cover A′, hinged at *a* and provided with a lock and key *a′*, whereby access may be readily had with the interior.

B represents a ribbon of paper or fabric wound upon suitable rollers B′ and B^2.

C is an indicating-glass, back of which the ribbon traverses as it is wound off of one roller onto the other.

B^3 is a cog-wheel upon a shaft *b* and actuated by a handle *b′* upon the exterior of the case. The gear-wheel B^3 meshes with pinions b^2 upon the rollers B′ and B^2, so that as the gear-wheel B^3 is turned by a handle *b′* it will operate to unwind the ribbon from one of the rollers and to wind the same upon the other roller. Upon this ribbon B is printed in successive order the dates corresponding with every day in the year, one of which dates is shown exposed in Fig. 3. Opposite each of these dates may be printed the information desired. Thus, for instance, suitable instructions may be posted upon the machine. These instructions may set forth that anybody wishing to ascertain the events connected with himself which are liable to transpire within one year from his last or next succeeding birthday shall bring to the glass indicator the date corresponding with his birthday, and there will be printed opposite each said date a series of events such as from the experience of astrologers and clairvoyants have been found most likely to be associated with the lives of persons born upon the said dates. The said information is, however, concealed, only to be exposed upon the dropping of a coin into the slot.

As will be now explained, D is a suitable frame pivoted at *d*. D′ is an obscuring-shield secured at its end and adapted before the coin is dropped into the machine to rest down back of the indicating-glass C, as shown by the full lines in Fig. 1. At the opposite end of this frame is a hopper D^2. D^3 is a yoke, which serves to close the bottom of the said hopper, and provided with a pin D^4, projecting downward from its lower end. B^4 is a

roller, about which the ribbon is passed. d' is an adjustable weight located at any suitable point upon the said pivoted frame.

We will now presume the machine is designed to operate by dropping a dime into the slot. The weight d' is carefully adjusted so that the frame D may be tilted by just the weight of a dime. The dime, having been dropped into the hopper D^2, serves to tilt the frame D, causing the point D^4 to come down and impinge against the roller B^4. This operates to raise the obscuring-shield D′ and exposes the printed matter at the side of the date. The coin, however, remains in the hopper D^2 until the ribbon is moved in either direction; but as soon as the ribbon is moved the point D^4 is dragged to the right or left until the coin is discharged from the hopper, as shown in Fig. 5. Then the frame immediately tilts in the opposite direction and brings the obscuring-disk down behind the indicating-glass C, leaving nothing exposed except the dates which may be observed through the orifice c in the said shield for this purpose.

E is the slot through which the coin is dropped. I prefer to line the bottom of the said slot along the portion e with lead or other frictional matter. This slot is so located with respect to the hopper D^2 that the proper coin—as, for instance, a dime—when dropped into the slot will slide freely therefrom and enter the hopper. If, however, a slug of lead should be introduced instead of a dime, this lead would meet with so much friction against the lead surface e that it would fall directly from the end of the slot into the interior of the case without shooting over the case into the coin-hopper, and would of course not operate the frame D.

Again, suppose a mischievous person should tie a string into a hole in a dime coin and drop it through the slot. The string would pass into the notch e', (shown in Fig. 7,) and in attempting to again remove the dime it would be cut off and dropped into the interior of the box. Moreover, the string would prevent the dime from jumping across into the hopper. His attempt would therefore simply result in the loss of his money.

F represents a weighted roller resting upon the ribbon B and designed to take up the slack and maintain the same taut as it is being rolled off from one of the rollers onto the other.

I do not limit myself herein to a construction in which the point D^4 shall strike against the roller B^4. It may strike against any of the other rollers or against the ribbon itself or against any other moving part which moves as the ribbon is moved.

D^5 represents any suitable deflector for directing the coin in any desired direction after it drops from the hopper.

The coin is illustrated at G in Fig. 5.

This is of course not limited to the employment of a ribbon with a forecast of events, as described; but any other information may be arranged upon the ribbons, and instead of the key being a series of dates it may be a series of letters or any other signs, it being only necessary that the operator may be furnished with proper instructions how to set the ribbon in order to gather the information he seeks and which it purports to give him.

What I claim is—

1. An information slot-machine comprising a ribbon upon which the data to be displayed is printed, rolls for causing the said ribbon to traverse past an indicating-orifice, and a tilting frame provided at one end with an obscuring-shield adjacent to said orifice and at the other end with a coin-hopper, said frame adapted to be tilted by the weight of a coin in the hopper, and said hopper adapted by the weight of the coin to be brought into engagement with the ribbon mechanism and constructed to be dumped by the latter upon any movement of the ribbon in either direction, substantially as described.

2. An information slot-machine comprising two rollers upon which is wound a ribbon with the desired information printed thereon and adapted to traverse past an indicating-orifice, a gear-wheel engaged with said rollers, and an exterior handle for actuating the same, and in connection therewith an obscuring-shield fixed at one end of a tilting frame, and a coin-hopper fixed to the other end of said frame, this frame adapted to be tilted by the weight of the coin in the hopper, and said hopper being adapted by the weight of the coin to be brought into engagement with the ribbon mechanism and constructed to be dumped by the latter upon any movement of the ribbon in either direction, substantially as described.

3. An information slot-machine comprising a ribbon B and rollers for causing the same to traverse past an indicating-orifice, said ribbon provided with dates corresponding with the consecutive days, and opposite each date the information desired to be exposed therewith, and in combination with said ribbon an obscuring-shield adapted to obscure the information adjacent to the date, but to continuously expose the date, and a tilting frame to which said obscuring-shield and coin-receiver are attached, said frame adapted to be tilted by the weight of a coin in the hopper and expose the desired information, and said coin-receiver adapted by the weight of the coin to be brought into engagement with the ribbon mechanism and constructed to be dumped by the latter upon any movement of the ribbon in either direction, substantially as described.

4. An information slot-machine consisting of a ribbon with means for traversing the same in front of an indicating-orifice, said ribbon having the information to be displayed printed thereon, and a tilting frame provided with an obscuring-shield and a coin-hopper,

said frame adapted to tilt and shift the shield by the weight of the coin in the hopper, said hopper provided with a swinging bottom adapted to be actuated by a moving part of the mechanism when the ribbon is shifted, and thereby dropping the coin, subtantially as described.

In testimony whereof I sign this specification in the presence of two witnesses.

ANSALEM G. HART.

Witnesses:
MARION A. REEVE,
DELL. BROWNE.