Oct. 13, 1931. H C. MILLIGAN 1,827,536

FLEXIBLE VITREOUS COATING FOR METALS

Filed Jan. 16, 1930 2 Sheets-Sheet 1

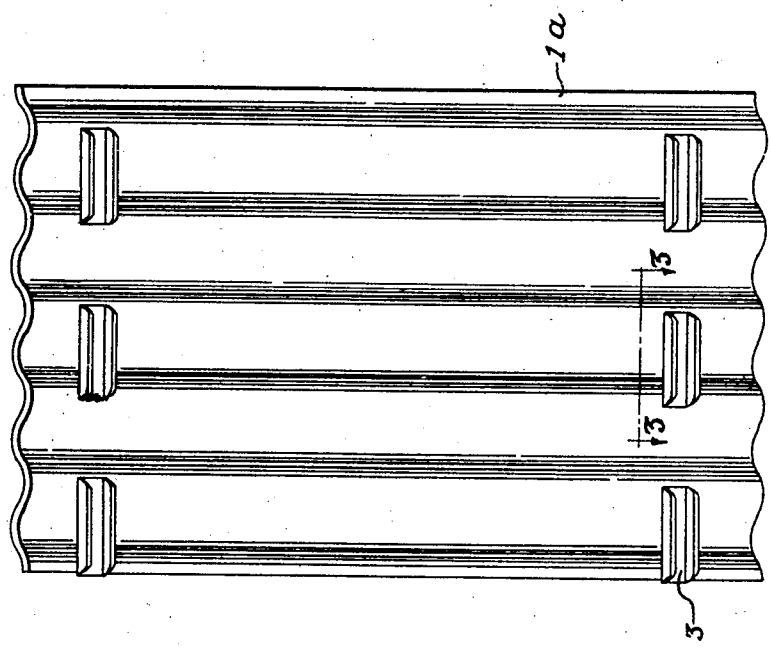

Fig. 2

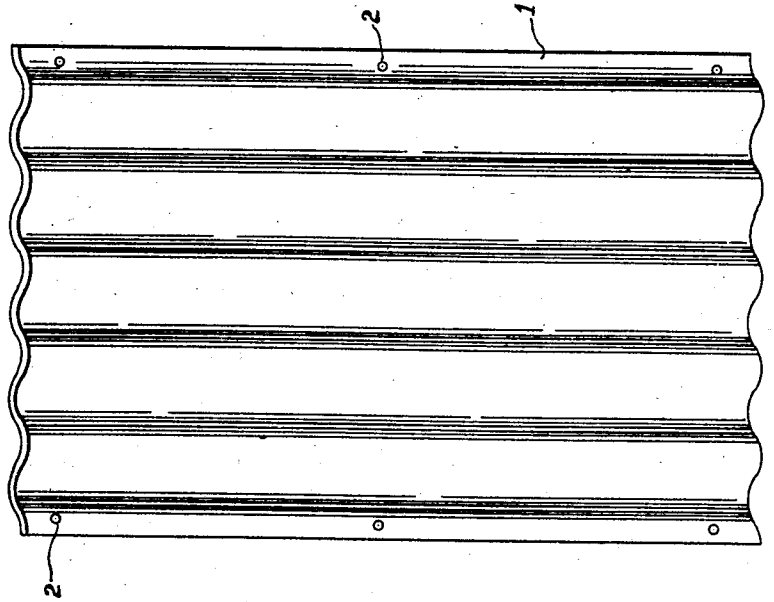

Fig. 1

Inventor

H. C. Milligan

By Frease and Bishop

Attorneys

Oct. 13, 1931. H. C. MILLIGAN 1,827,536

FLEXIBLE VITREOUS COATING FOR METALS

Filed Jan. 16, 1930 2 Sheets-Sheet 2

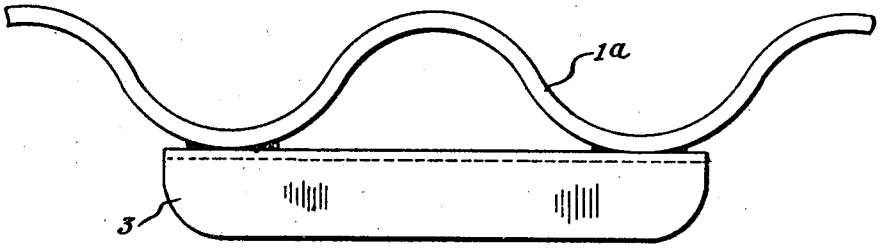

Fig. 3

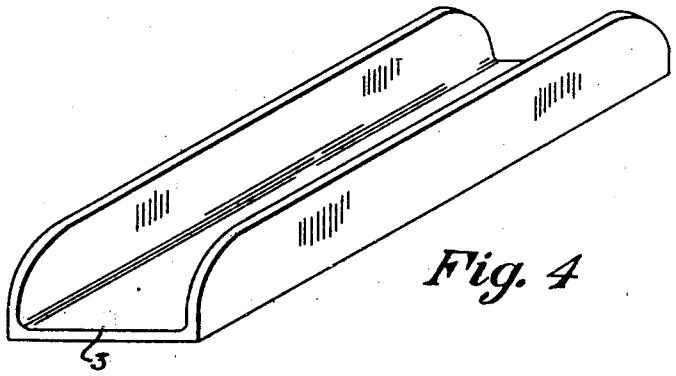

Fig. 4

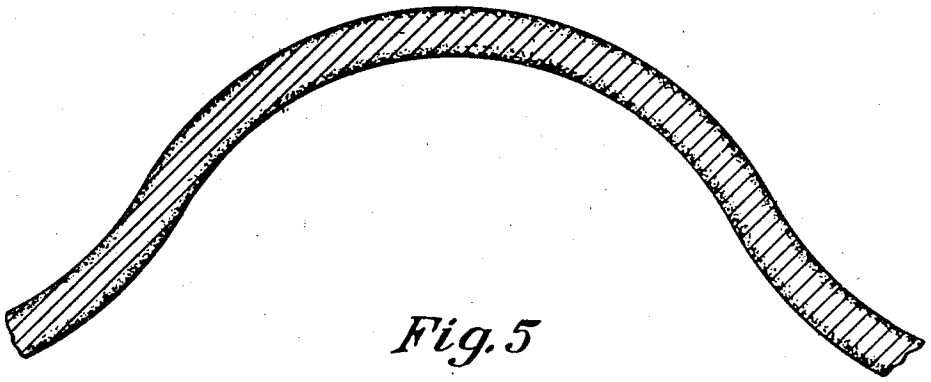

Fig. 5

Inventor

H. C. Milligan

By Frease and Bishop

Attorneys

Patented Oct. 13, 1931 1,827,536

UNITED STATES PATENT OFFICE

HENRY C. MILLIGAN, OF CANTON, OHIO

FLEXIBLE VITREOUS COATING FOR METALS

Application filed January 16, 1930. Serial No. 421,192.

The invention relates to the coating of metal, especially iron or steel sheet metal, and more particularly to a flexible vitreous coating for sheet metal used for various building purposes.

The object of the invention is to provide metal sheets for exterior building purposes having a non-oxidizable, flexible vitreous coating entirely covering all surfaces of the sheet metal and fused or welded to the surface and into the pores of the metal; and to provide means for attaching the metal sheets to the frame structure of a building without exposing any unprotected portions of the metal to the elements.

An embodiment of the invention as applied to corrugated metal sheets for building purposes is illustrated in the accompanying drawings, in which

Figure 1 is a perspective view of one of the improved corrugated sheets provided with apertures to receive nails or the like for attaching to the frame structure of a building;

Fig. 2, a similar view showing attaching cleats welded to the inner surface of the sheet and arranged to be coated with the non-oxidizable vitreous coating;

Fig. 3, an enlarged sectional view on the line 3—3, Fig. 2;

Fig. 4, a detached perspective view of one of the attaching cleats, and

Fig. 5, an enlarged fragmentary sectional view through a portion of the sheet showing the vitreous coating welded or fused into the pores thereof.

Similar numerals refer to similar parts throughout the drawings.

Although the invention is adapted to the coating of any kind of sheet metal building material in order to provide a flexible non-oxidizable surface thereon, the accompanying drawings illustrate the invention as applied to corrugated metal sheets.

In Fig. 1 is shown a corrugated metal sheet 1 provided at its edge portions with apertures 2, to receive nails or the like for attaching the sheet to the frame structure of a building.

All surfaces of this sheet are arranged to be covered with the vitreous coating to be hereinafter described, the coating being applied after the apertures 2 are formed in the sheet in order that there will be no exposed portions of the metal when the sheet is placed in use.

In Fig. 2, the sheet 1*a* is similar to the sheet shown in Fig. 1, the nail apertures being omitted and attaching cleats, preferably of channel form as illustrated at 3 being welded to the rear surface of the sheet near each end thereof, bridging certain of the corrugations as shown.

After these attaching cleats have been welded to the sheet, all surfaces of the sheet and cleats are then covered with the improved vitreous coating in the manner hereinafter described.

Wires or any suitable form of clips may be engaged with the cleats 3 for attaching the sheet to a building structure. A sheet metal article is thus produced, all surfaces of which are covered with a flexible non-oxidizable vitreous coating which is welded or fused to the metal and will not be affected by weather conditions or hard usage.

Before the silicate or alkali coating is applied to the surface of an iron or steel sheet, all scale and oxidation is removed therefrom as by immersing it in a pickling solution in usual and well known manner; but for the purpose of the present invention, a certain amount of iron sulphide is added to the pickling solution to prevent the formation of "jumpers" which result from a "fish scaling" of the coating on the metal.

The iron sulphide treatment may be accomplished in the usual period required for pickling, which may be from three to five minutes, depending upon the character of the iron or steel, and upon the amount of oxidation or scale to be removed therefrom.

A pickling solution containing 2½% of sulphuric acid may be used, and when a pickling tank containing 400 gallons of the pickling solution is used, it has been found desirable, if not necessary, to initially add thereto some 2 pounds and 4 ounces of dry lump iron sulphide, and to add the same amount of iron sulphide thereto every two hours during the

time the pickling solution is in use; and after the solution has been used a week, it is preferred to replace the entire contents of the tank with a new solution.

It has been found that by the use of iron sulphide in addition to the ordinary pickling solution, there is accomplished a chemical action which results in a perfect adhesion of the silicate or alkali coating thereon, and overcomes the greatest difficulty which has been experienced in the art of enameling iron and steel surfaces, to-wit: a "fish scaling" which causes what is known as "jumpers" in the enameling art.

Without the use of iron sulphide in the pickling solution, it is absolutely impossible to make an elastic enamel coated sheet metal which will not chip off or "fish scale", so as to form the "jumpers" in or on the surface of the metal.

In producing the vitreous coating to which the invention pertains, the metals to be used in the coating are first converted to oxides such as antimony, lead, arsenic, nickel, manganese, cobalt and the like. Although these metals are given as examples, it should be understood that the invention is not limited to these particular metals, but other suitable metals, whose oxides will fuse at a low degree of temperature, with suitable fluxes, may be used.

A given amount of any one or more of the metal oxides is added to a mixture containing boracic acid, sodium oxide, and fluoride, such as cryolite and/or fluor spar, silica, quartz, or other silicate and alumina.

The exact proportions of the several ingredients may vary as desired as follows:

10% to 20% in weight of boracic acid.
5% to 20% in weight of sodium oxide.
5% to 20% of fluoride.
30% to 50% of silicate.
5% to 10% in weight of alumina.

There is added to a certain weight of these compounds, something less than an equal amount in weight of any one or more of the metal oxides. This mass is thoroughly mixed and then put into a smelter where it is thoroughly fused, allowing the volatile matters to pass off.

The fused mass is then poured into water, splintering the mass into condition for grinding. The splintered mass is then ground to an almost impalpable powder to which is added a small amount of borax, soda, litharge or such other fluxes as are commonly used for bracing purposes, which may vary from one-half percent to two percent in accordance with the desired hardness or resisting qualities.

The powdered mass is then mixed with water to the proper consistency for dipping or spraying under pressure and the sheets having been pickled and treated with iron sulphide in the manner described are then coated with the metal oxide and silicate mixture, and permitted to dry.

The coated sheets are then submitted to a high temperature which may be approximately 2000° F. and the coated sheets are held at this temperature until the coating has thoroughly fused and the coating and the sheets are welded together, the time required for fusing and welding depending upon the thickness and size of the metal sheets being treated, ranging from two minutes upward.

During this heating of the coated sheets the coating is fused into the pores of the metal and welded to the surface thereof. A non-oxidizable, flexible, vitreous coating is thus fused to all surfaces of the sheet metal, permitting the metal to be flexed or bent without damaging the coating and providing a rust-resisting covering upon all portions of the metal sheet.

The coating being flexible will not chip or spawl from the sheets to expose the metal surfaces thereof and may be attached to the frame structure of a building without leaving any exposed portions of the metal.

I claim:

1. The method of coating steel and iron sheets with enamel which consists in cleaning the surfaces of the sheets with pickling solution containing iron sulphide, coating the sheets with metal oxides and silicates, and then submitting the coated sheets to a high temperature to thoroughly fuse the coating and weld it upon the sheets.

2. The method of coating steel and iron sheets with enamel which consists in clearing the surfaces of the sheets with sulphuric acid solution containing iron sulphide, coating the sheets with metal oxides and silicates, and then submitting the coated sheets to a high temperature to thoroughly fuse the coating and weld it upon the sheets.

3. The method of coating steel and iron sheets with enamel which consists in cleaning the surfaces of the sheets with pickling solution containing two pounds and four ounces of iron sulphide in 400 gallons of solution, coating the sheets with metal oxides and silicates, and then submitting the coated sheets to a high temperature to thoroughly fuse the coating and weld it upon the sheets.

4. The method of coating steel and iron sheets with enamel which consists in cleaning the surfaces of the sheets with pickling solution containing two pounds and four ounces of iron sulphide in 400 gallons of solution, adding two pounds and four ounces of iron sulphide to the solution bi-hourly, coating the sheets with metal oxides and silicates, and then submitting the coated sheets to a high temperature to thoroughly fuse the coating and weld it upon the sheets.

5. In a method of coating steel and iron sheets, the step of cleaning the surface on the

sheets with a pickling solution containing a metal sulphide.

6. In a method of coating steel and iron sheets with enamel, the step of pickling the sheets in a sulphuric acid bath containing a metal sulphide.

7. In a method of coating steel and iron sheets with enamel, the step of treating the sheets which consists in preparing a sulphuric acid pickling solution, adding a metal sulphide to the solution, and immersing the sheets in the solution.

8. In a method of coating steel and iron sheets with enamel, the step of treating the sheets which consists in preparing sulphuric acid pickling solution, adding iron sulphide to the solution and immersing the sheets in the solution.

In testimony that I claim the above, I have hereunto subscribed my name.

HENRY C. MILLIGAN.