US 20050170814A1

(19) United States

(12) Patent Application Publication (10) Pub. No.: US 2005/0170814 A1

Joao et al. (43) Pub. Date: Aug. 4, 2005

(54) TRANSACTION SECURITY APPARATUS AND METHOD

(76) Inventors: **Raymond Anthony Joao**, Yonkers, NY (US); **Robert Richard Bock**, Yonkers, NY (US)

Correspondence Address:
RAYMOND A. JOAO, ESQ.
122 BELLEVUE PLACE
YONKERS, NY 10703 (US)

(21) Appl. No.: **11/091,200**

(22) Filed: **Mar. 28, 2005**

Related U.S. Application Data

(63) Continuation of application No. 09/949,694, filed on Sep. 10, 2001, which is a continuation of application No. 09/169,053, filed on Oct. 9, 1998, now Pat. No. 6,529,725, which is a continuation of application No. 08/873,945, filed on Jun. 12, 1997, now Pat. No. 5,878,337, which is a continuation of application No. 08/694,199, filed on Aug. 8, 1996, now abandoned.

Publication Classification

(51) **Int. Cl.**[7] **G06K 5/00**

(52) **U.S. Cl.** **455/411**; 235/380

(57) **ABSTRACT**

A transaction security apparatus and method, including a receiver which receives a limitation or restriction on an account usage, wherein the limitation or restriction on an account usage is received in real-time from a communication device associated with an individual account holder, a memory device for storing the limitation or restriction on an account usage, and a processing device for processing a transaction on an account or an authorization request in conjunction with the limitation or restriction on an account usage. The processing device generates a signal, wherein the signal contains information for authorizing or disallowing the transaction.

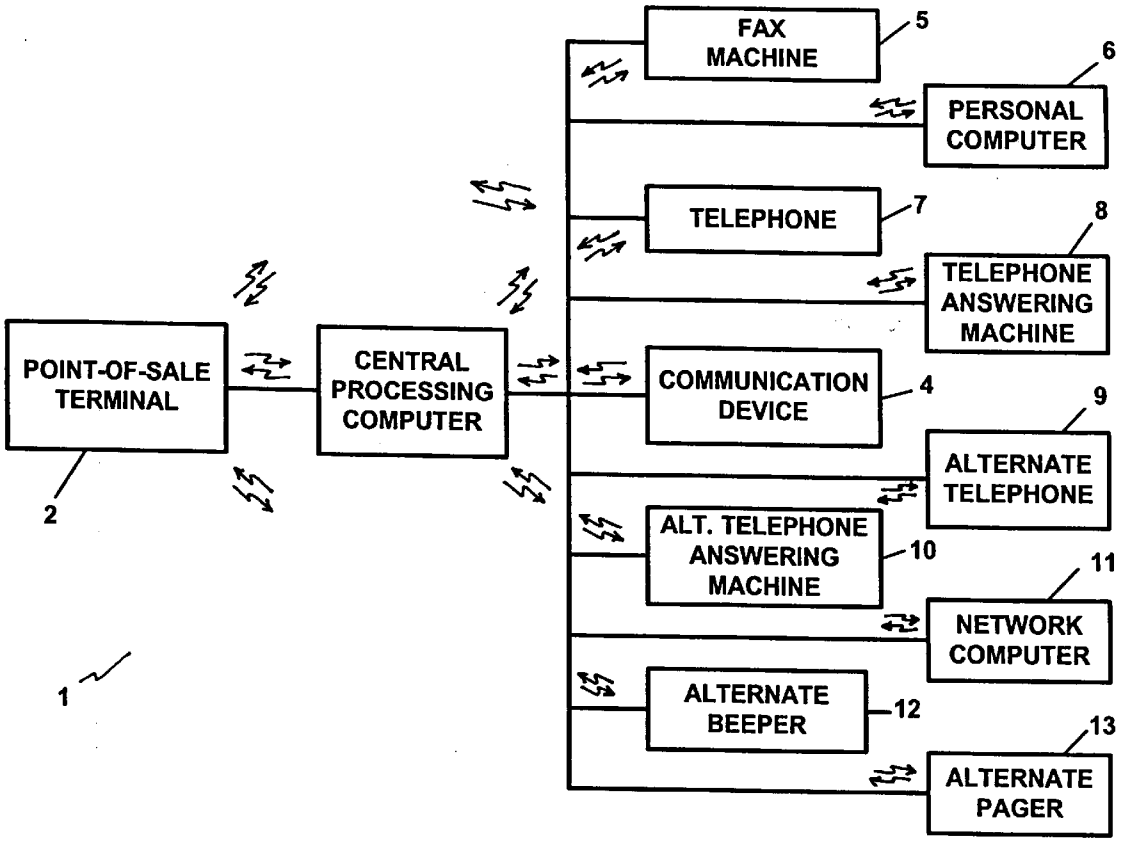

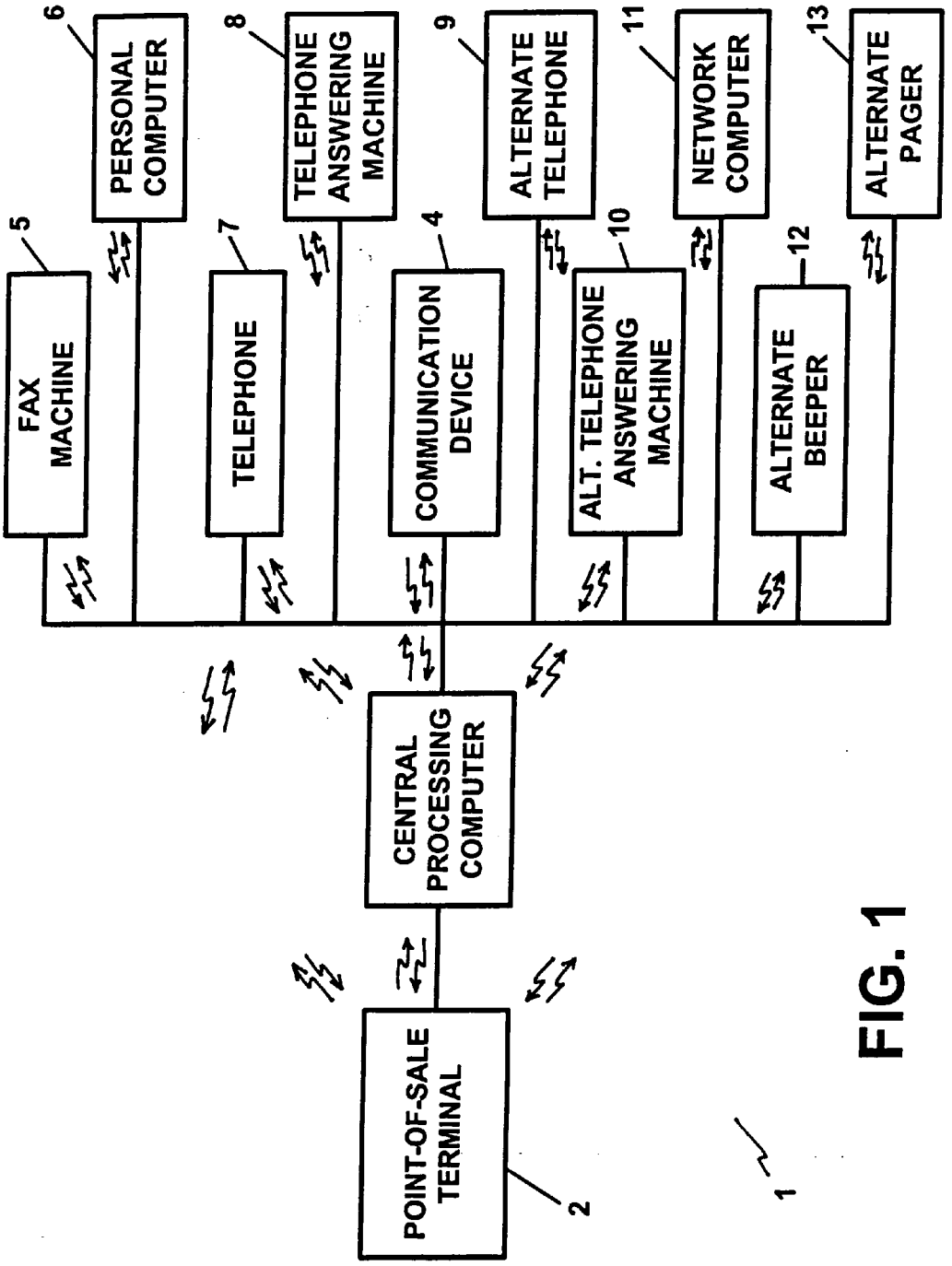
PERSONAL COMPUTER
6
TELEPHONE ANSWERING MACHINE
8
ALTERNATE TELEPHONE
9
NETWORK COMPUTER
11
ALTERNATE PAGER
13
FAX MACHINE
5
TELEPHONE
7
COMMUNICATION DEVICE
4
ALT. TELEPHONE ANSWERING MACHINE
10
ALTERNATE BEEPER
12
CENTRAL PROCESSING COMPUTER
POINT-OF-SALE TERMINAL
2
1

FIG. 1

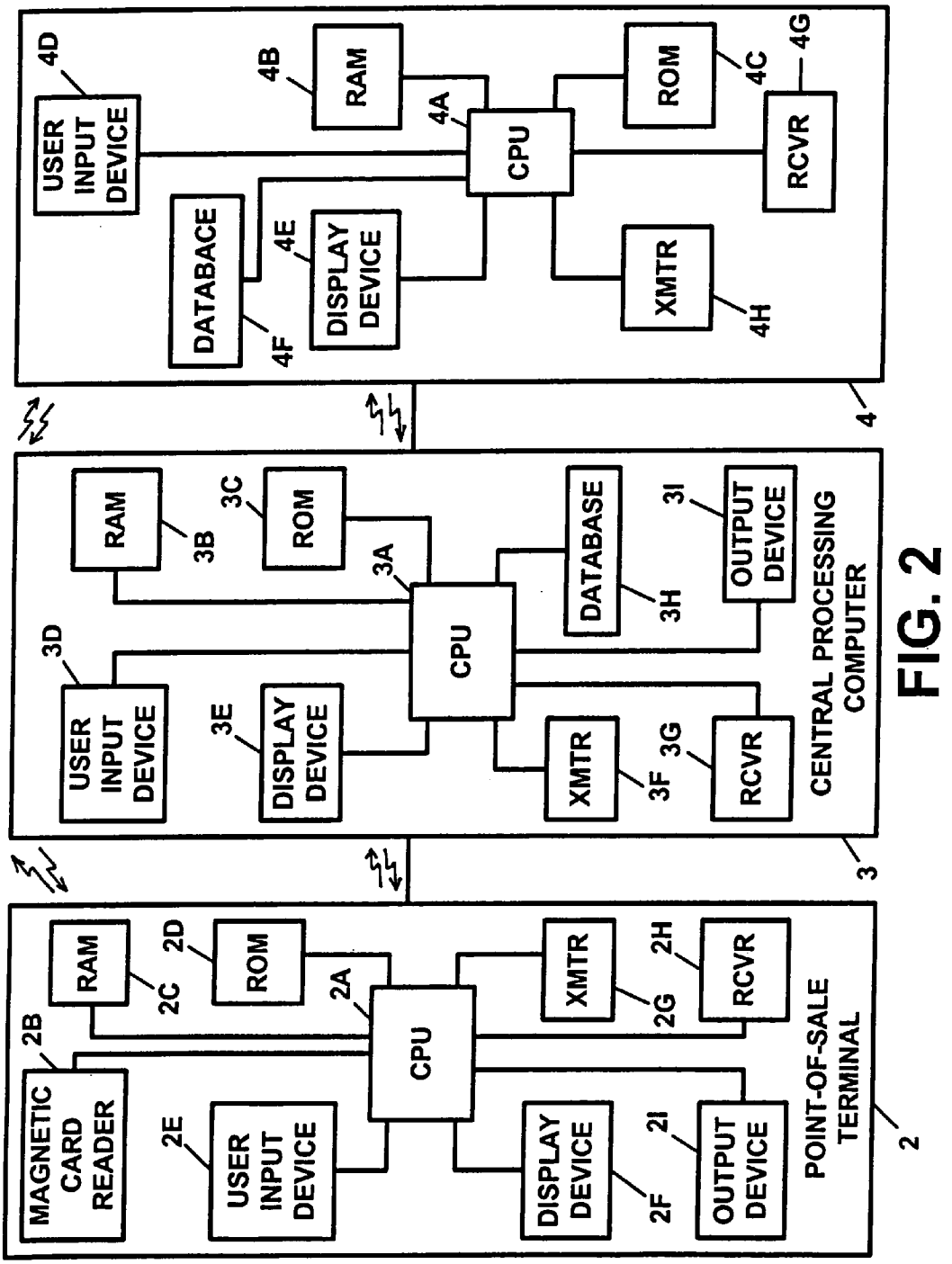
4
USER INPUT DEVICE
4D
RAM
4B
CPU
4A
ROM
4C
RCVR
4G
DATABACE
4F
DISPLAY DEVICE
4E
XMTR
4H
3
CENTRAL PROCESSING COMPUTER
RAM
3B
ROM
3C
CPU
3A
DATABASE
3H
OUTPUT DEVICE
3I
USER INPUT DEVICE
3D
DISPLAY DEVICE
3E
XMTR
3F
RCVR
3G
2
POINT-OF-SALE TERMINAL
RAM
2C
ROM
2D
CPU
2A
XMTR
2G
RCVR
2H
MAGNETIC CARD READER
2B
USER INPUT DEVICE
2E
DISPLAY DEVICE
2F
OUTPUT DEVICE
2I

FIG. 2

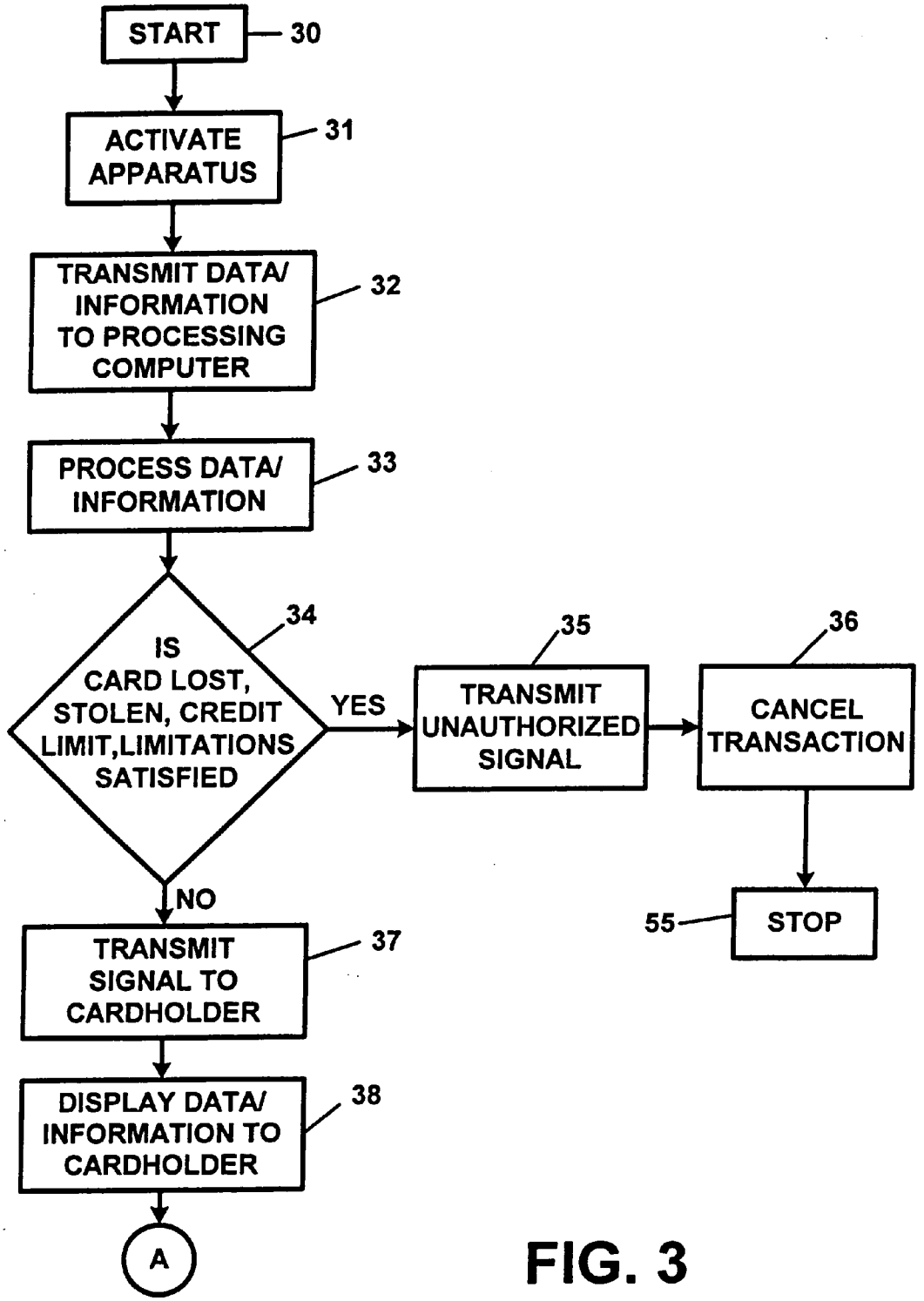
START
30
ACTIVATE APPARATUS
31
TRANSMIT DATA/ INFORMATION TO PROCESSING COMPUTER
32
PROCESS DATA/ INFORMATION
33
IS CARD LOST, STOLEN, CREDIT LIMIT,LIMITATIONS SATISFIED
34
YES
35
TRANSMIT UNAUTHORIZED SIGNAL
36
CANCEL TRANSACTION
55
STOP
NO
TRANSMIT SIGNAL TO CARDHOLDER
37
DISPLAY DATA/ INFORMATION TO CARDHOLDER
38
A

FIG. 3

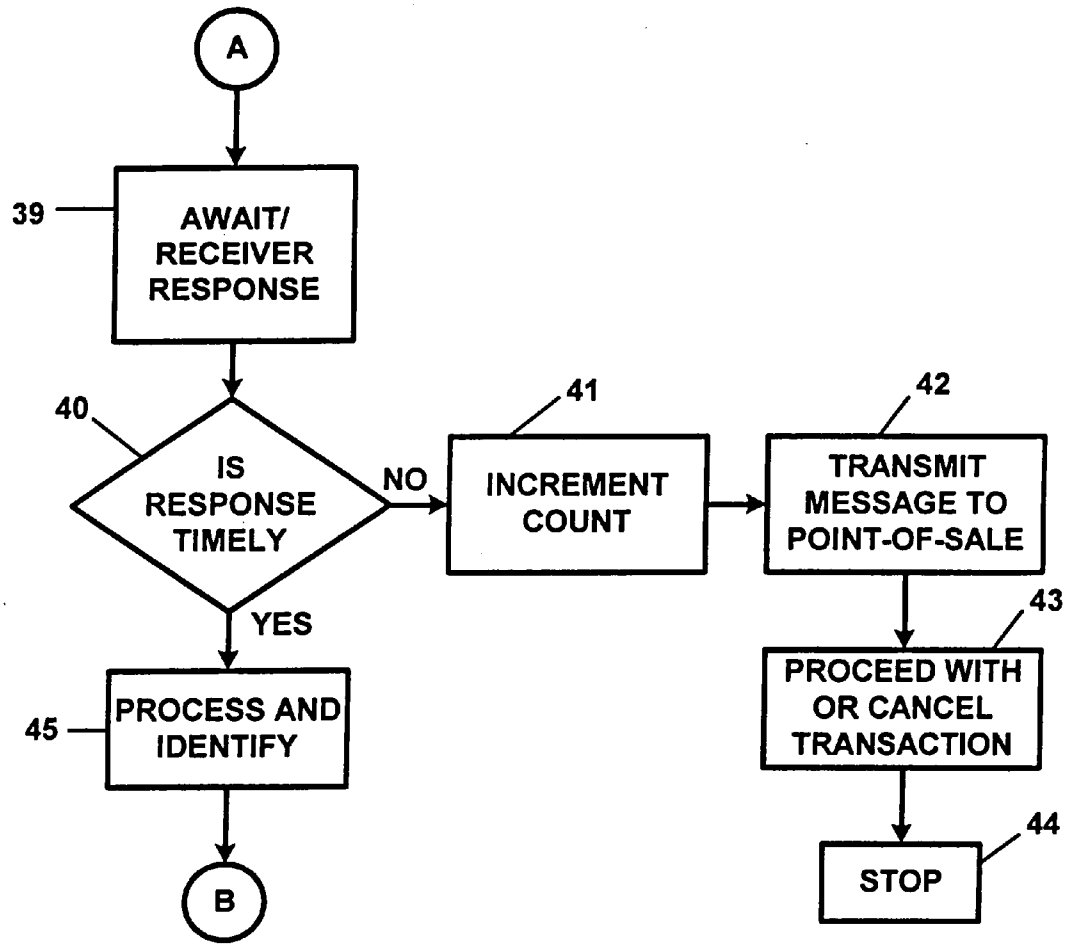
A
39
AWAIT/ RECEIVER RESPONSE
40
IS RESPONSE TIMELY
NO
41
INCREMENT COUNT
42
TRANSMIT MESSAGE TO POINT-OF-SALE
43
PROCEED WITH OR CANCEL TRANSACTION
44
STOP
YES
45
PROCESS AND IDENTIFY
B

FIG. 3 (CONT.)

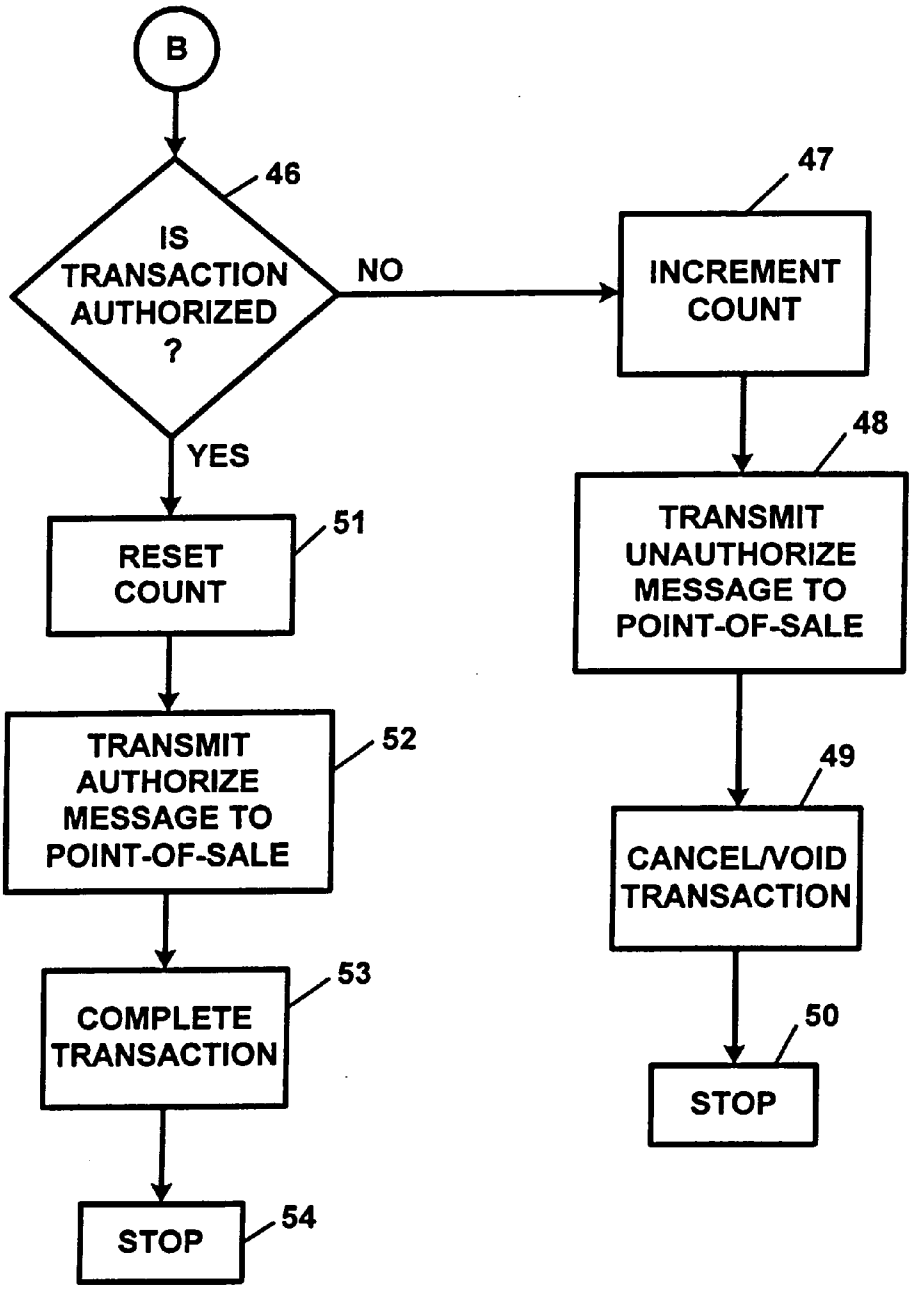
B
46
IS TRANSACTION AUTHORIZED ?
NO
47
INCREMENT COUNT
48
TRANSMIT UNAUTHORIZE MESSAGE TO POINT-OF-SALE
49
CANCEL/VOID TRANSACTION
50
STOP
YES
51
RESET COUNT
52
TRANSMIT AUTHORIZE MESSAGE TO POINT-OF-SALE
53
COMPLETE TRANSACTION
54
STOP

FIG. 3 (CONT.)

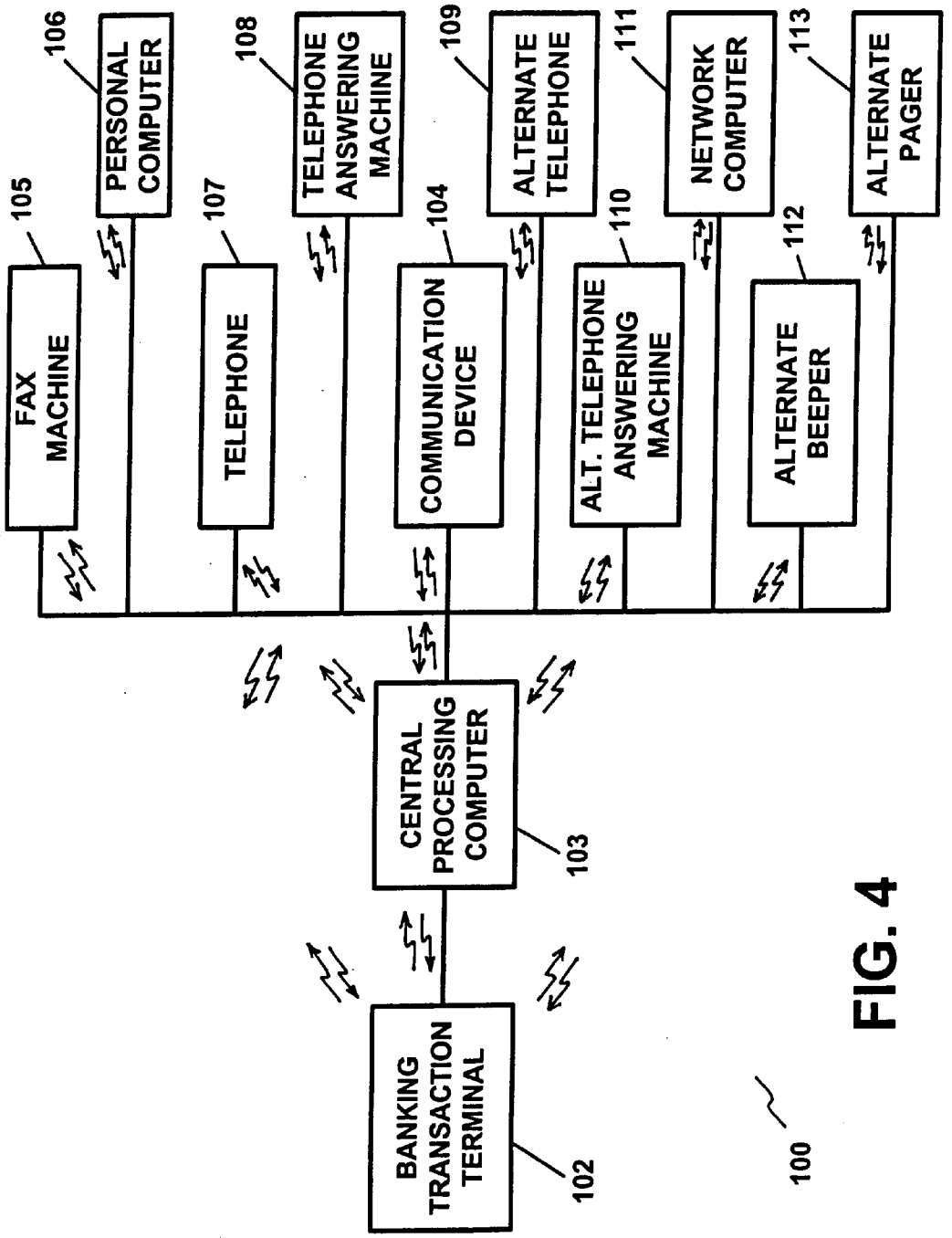
BANKING TRANSACTION TERMINAL
102
CENTRAL PROCESSING COMPUTER
103
COMMUNICATION DEVICE
104
FAX MACHINE
105
PERSONAL COMPUTER
106
TELEPHONE
107
TELEPHONE ANSWERING MACHINE
108
ALTERNATE TELEPHONE
109
ALT. TELEPHONE ANSWERING MACHINE
110
NETWORK COMPUTER
111
ALTERNATE BEEPER
112
ALTERNATE PAGER
113
100

FIG. 4

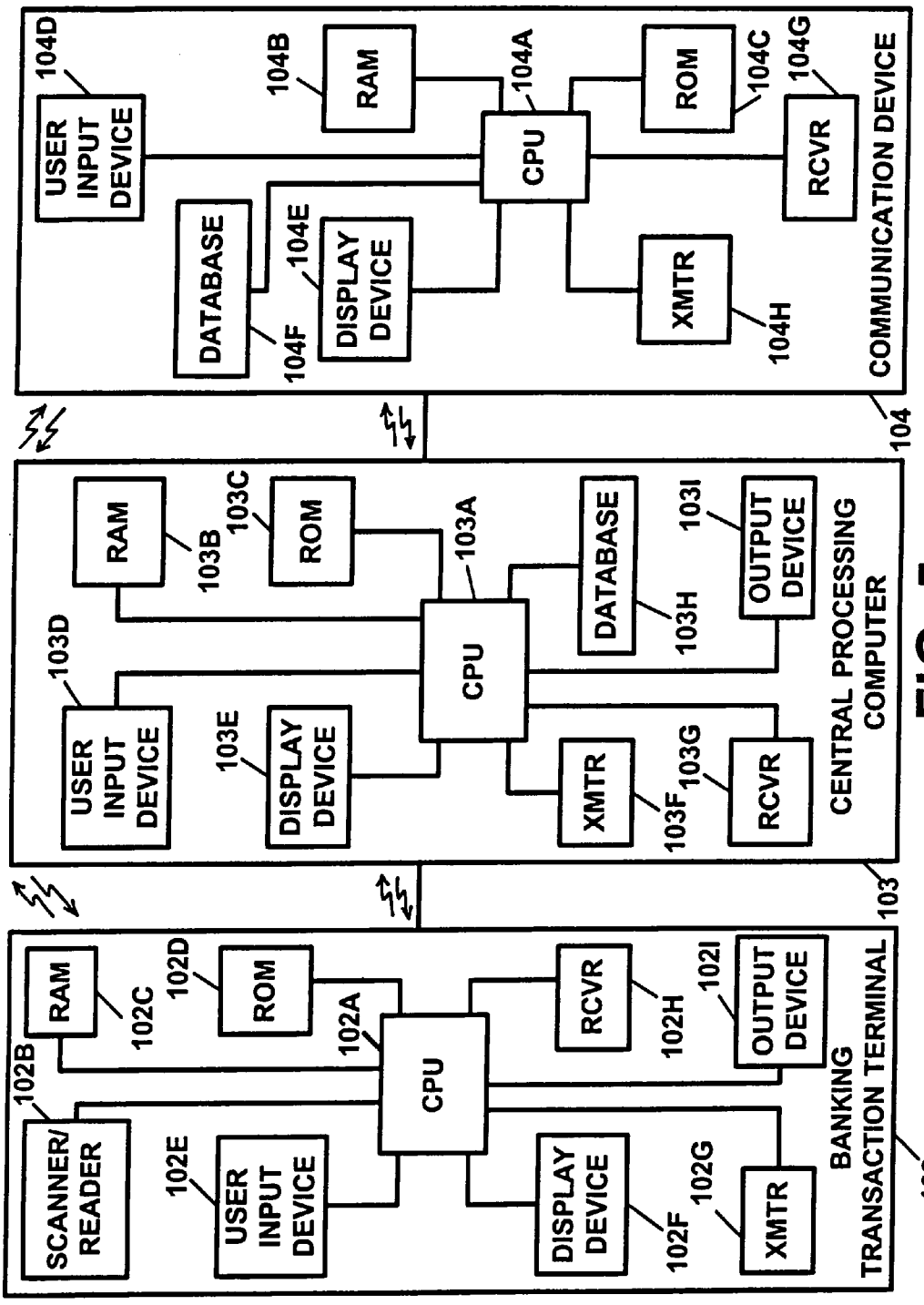
BANKING TRANSACTION TERMINAL
102
SCANNER/ READER
102B
USER INPUT DEVICE
102E
DISPLAY DEVICE
102F
XMTR
102G
OUTPUT DEVICE
102I
RCVR
102H
CPU
102A
RAM
102C
ROM
102D
CENTRAL PROCESSING COMPUTER
103
USER INPUT DEVICE
103D
DISPLAY DEVICE
103E
XMTR
103F
RCVR
103G
CPU
103A
RAM
103B
ROM
103C
DATABASE
103H
OUTPUT DEVICE
103I
COMMUNICATION DEVICE
104
USER INPUT DEVICE
104D
DATABASE
104F
DISPLAY DEVICE
104E
XMTR
104H
CPU
104A
RAM
104B
ROM
104C
RCVR
104G

FIG. 5

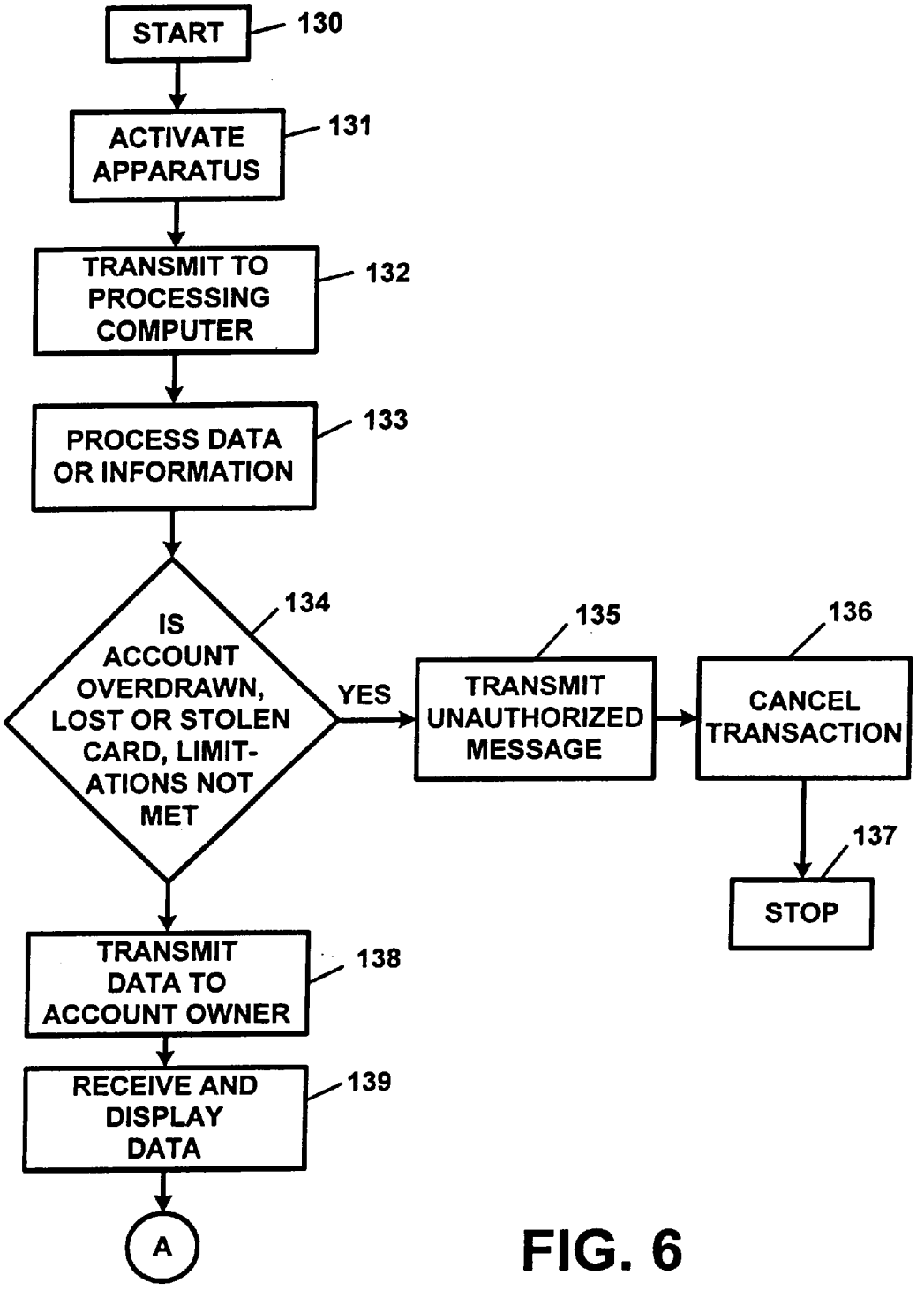
START
130
ACTIVATE APPARATUS
131
TRANSMIT TO PROCESSING COMPUTER
132
PROCESS DATA OR INFORMATION
133
IS ACCOUNT OVERDRAWN, LOST OR STOLEN CARD, LIMIT-ATIONS NOT MET
134
YES
135
TRANSMIT UNAUTHORIZED MESSAGE
136
CANCEL TRANSACTION
137
STOP
TRANSMIT DATA TO ACCOUNT OWNER
138
RECEIVE AND DISPLAY DATA
139
A

FIG. 6

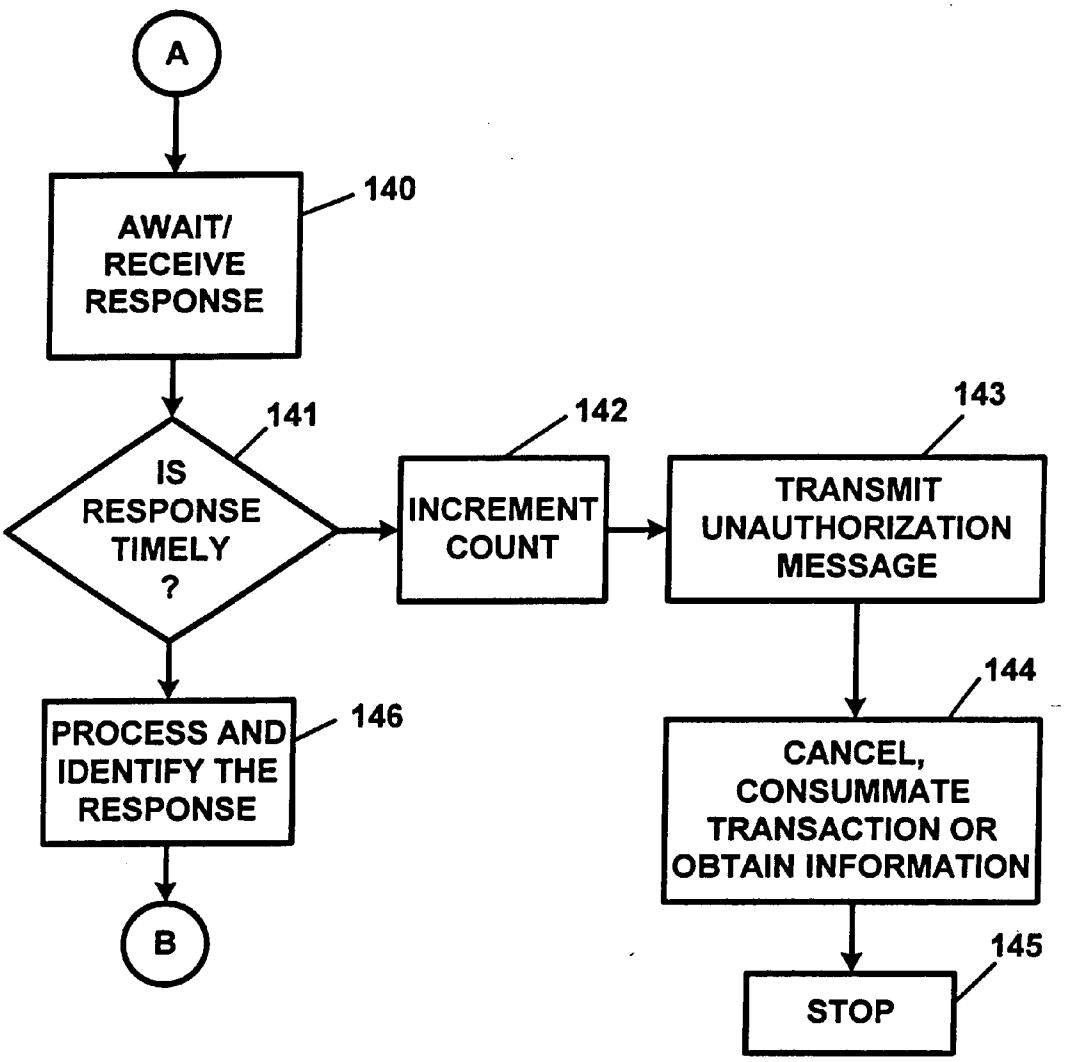
A
AWAIT/ RECEIVE RESPONSE
140
IS RESPONSE TIMELY ?
141
INCREMENT COUNT
142
TRANSMIT UNAUTHORIZATION MESSAGE
143
PROCESS AND IDENTIFY THE RESPONSE
146
B
CANCEL, CONSUMMATE TRANSACTION OR OBTAIN INFORMATION
144
STOP
145

FIG. 6 (CONT.)

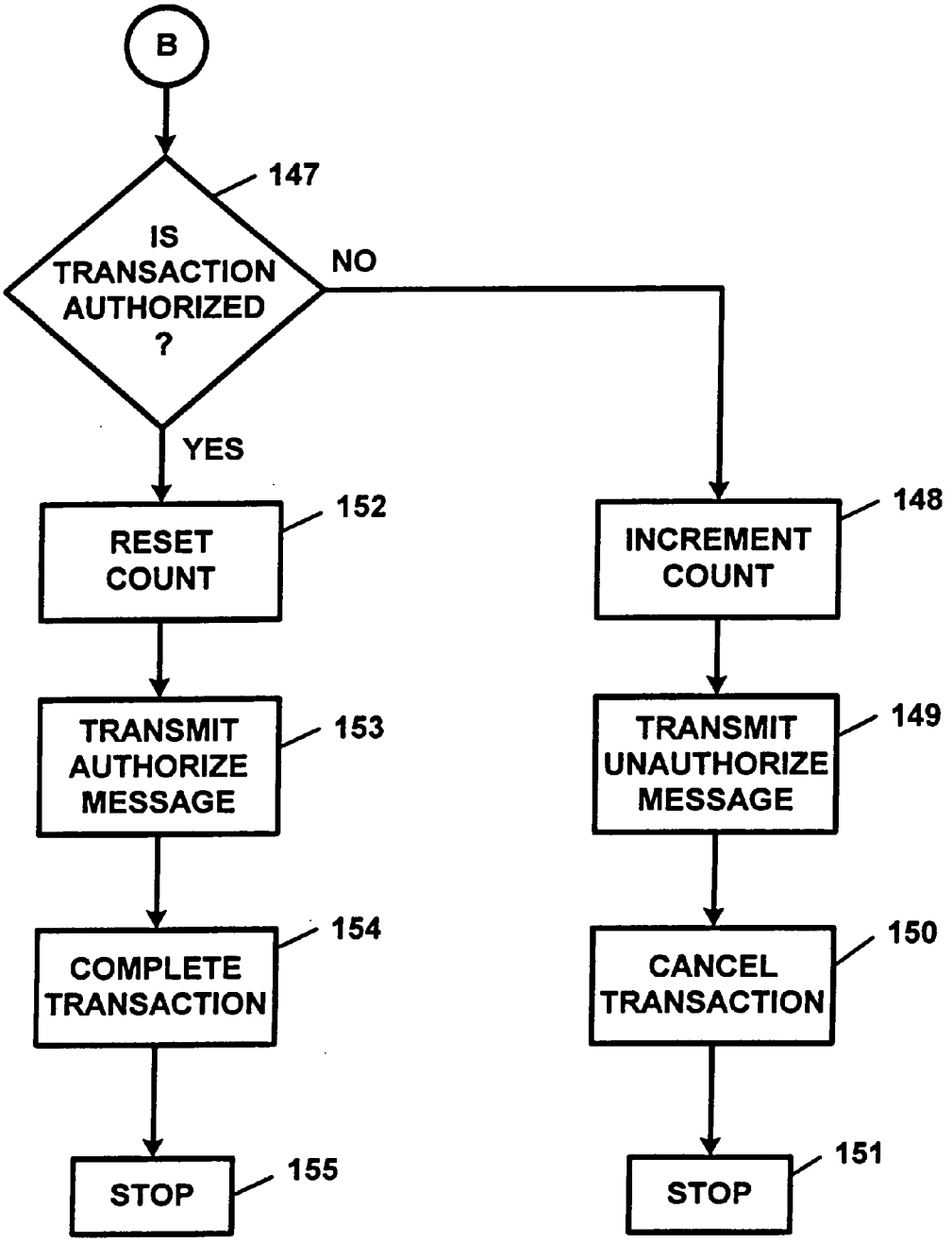
B
147
IS TRANSACTION AUTHORIZED ?
NO
YES
RESET COUNT
152
INCREMENT COUNT
148
TRANSMIT AUTHORIZE MESSAGE
153
TRANSMIT UNAUTHORIZE MESSAGE
149
COMPLETE TRANSACTION
154
CANCEL TRANSACTION
150
STOP
155
STOP
151

FIG. 6 (CONT.)

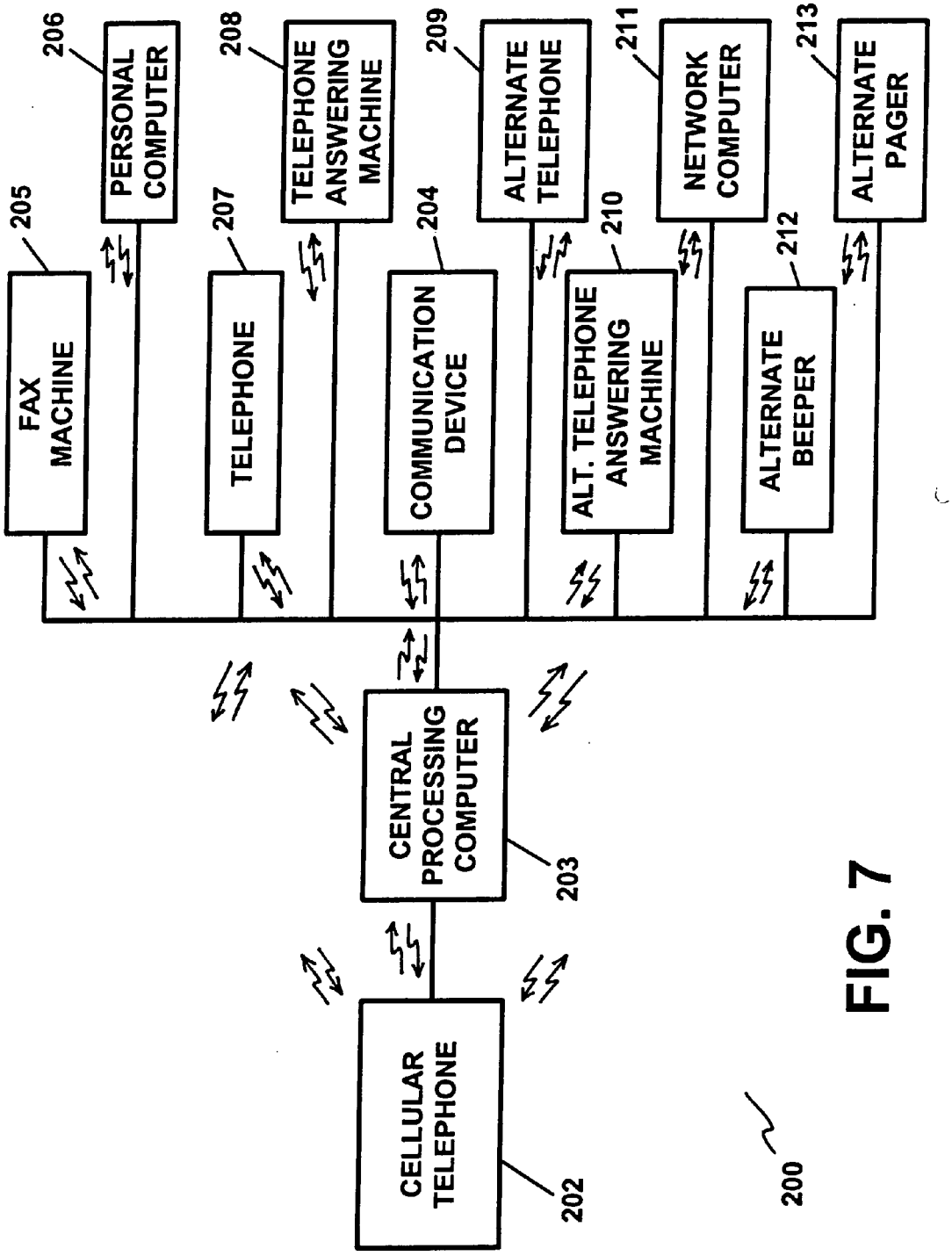
206
PERSONAL COMPUTER
208
TELEPHONE ANSWERING MACHINE
209
ALTERNATE TELEPHONE
211
NETWORK COMPUTER
213
ALTERNATE PAGER
205
FAX MACHINE
207
TELEPHONE
204
COMMUNICATION DEVICE
210
ALT. TELEPHONE ANSWERING MACHINE
212
ALTERNATE BEEPER
CENTRAL PROCESSING COMPUTER
203
CELLULAR TELEPHONE
202
200

FIG. 7

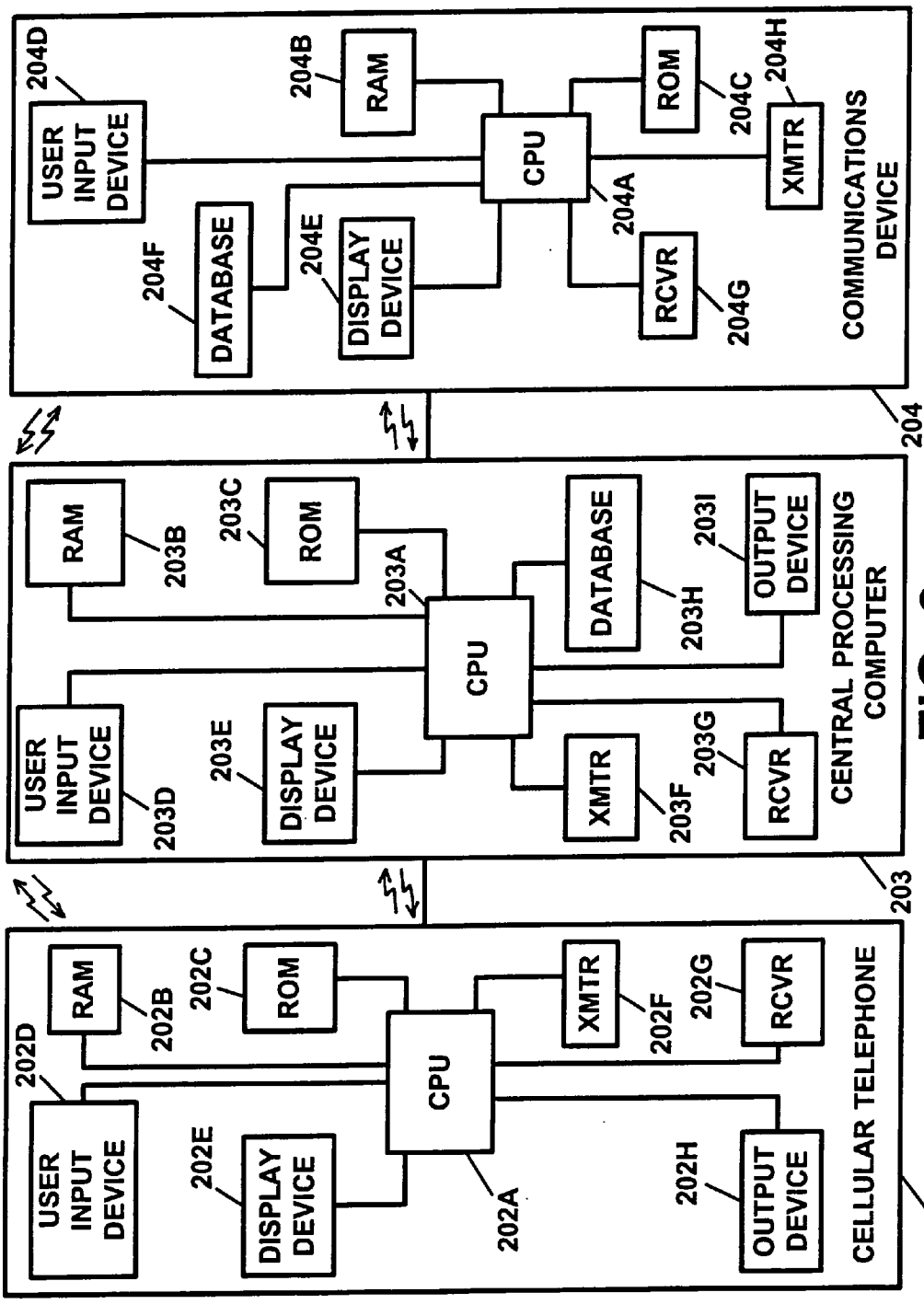
CELLULAR TELEPHONE
202
USER INPUT DEVICE
202D
RAM
202B
ROM
202C
CPU
202A
DISPLAY DEVICE
202E
XMTR
202F
RCVR
202G
OUTPUT DEVICE
202H
CENTRAL PROCESSING COMPUTER
203
USER INPUT DEVICE
203D
RAM
203B
ROM
203C
CPU
203A
DISPLAY DEVICE
203E
XMTR
203F
RCVR
203G
DATABASE
203H
OUTPUT DEVICE
203I
COMMUNICATIONS DEVICE
204
USER INPUT DEVICE
204D
RAM
204B
ROM
204C
CPU
204A
XMTR
204H
DATABASE
204F
DISPLAY DEVICE
204E
RCVR
204G

FIG. 8

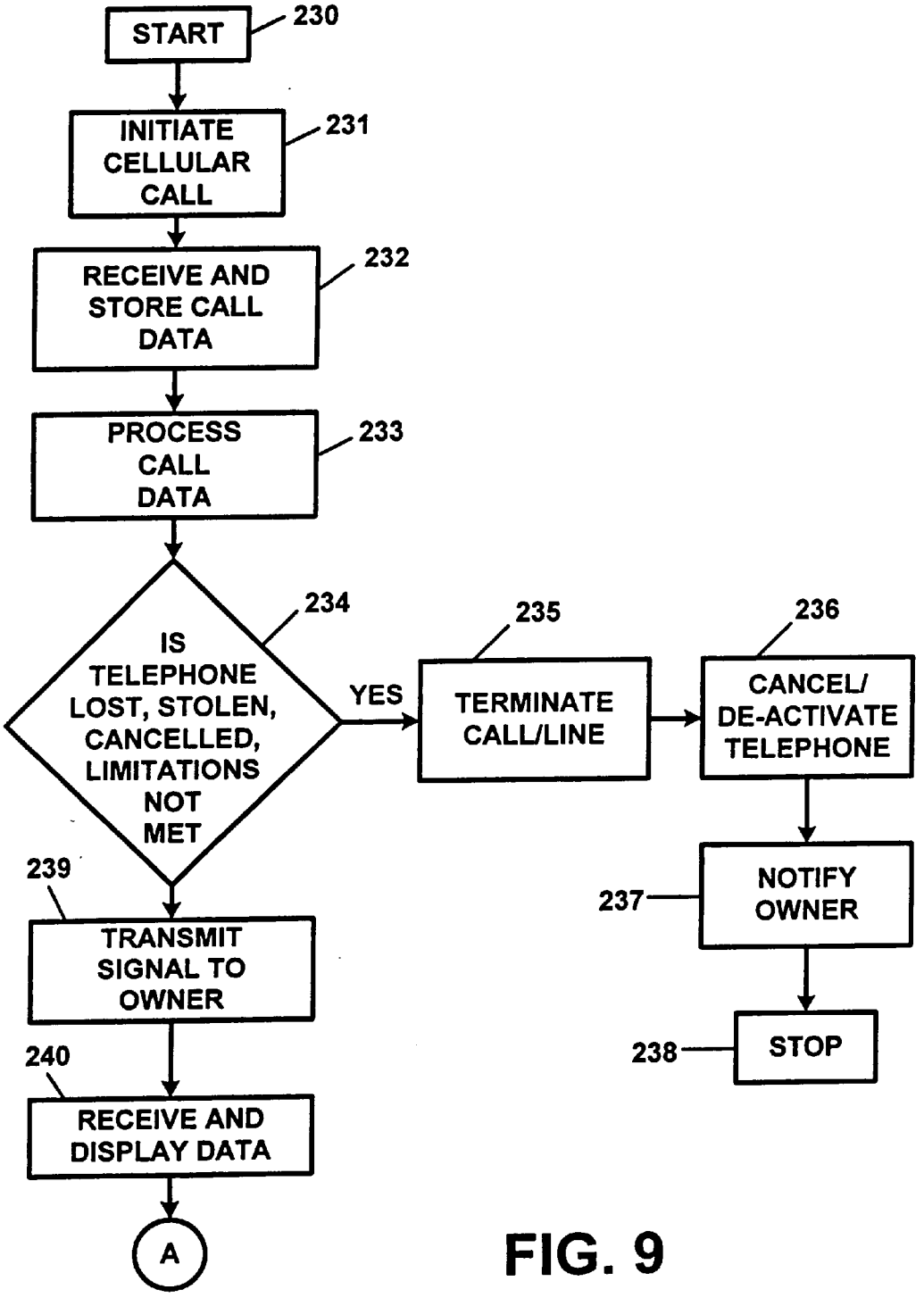
START
230
INITIATE CELLULAR CALL
231
RECEIVE AND STORE CALL DATA
232
PROCESS CALL DATA
233
IS TELEPHONE LOST, STOLEN, CANCELLED, LIMITATIONS NOT MET
234
YES
235
TERMINATE CALL/LINE
236
CANCEL/ DE-ACTIVATE TELEPHONE
NOTIFY OWNER
237
STOP
238
239
TRANSMIT SIGNAL TO OWNER
240
RECEIVE AND DISPLAY DATA
A

FIG. 9

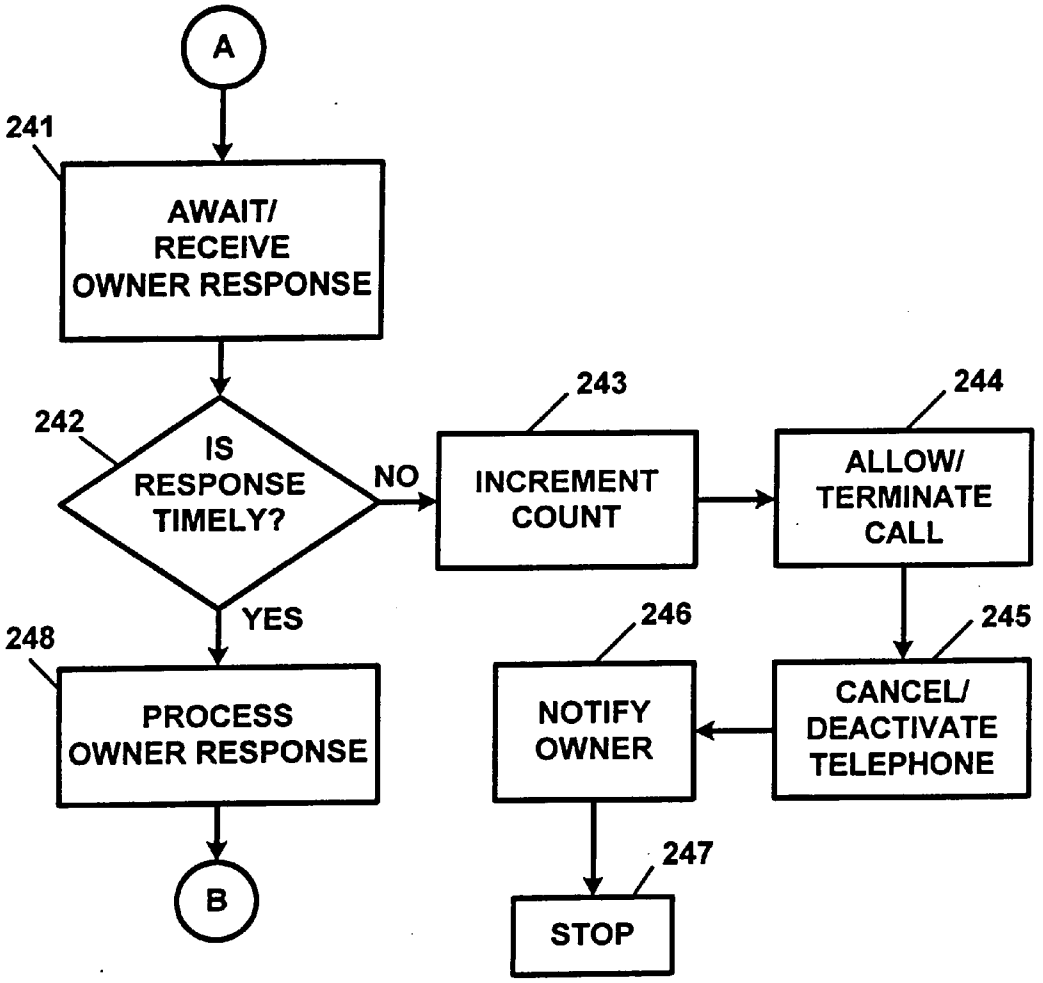
A
241
AWAIT/
RECEIVE
OWNER RESPONSE
242
IS
RESPONSE
TIMELY?
NO
243
INCREMENT
COUNT
244
ALLOW/
TERMINATE
CALL
YES
248
PROCESS
OWNER RESPONSE
246
NOTIFY
OWNER
245
CANCEL/
DEACTIVATE
TELEPHONE
B
247
STOP

FIG. 9 (CONT.)

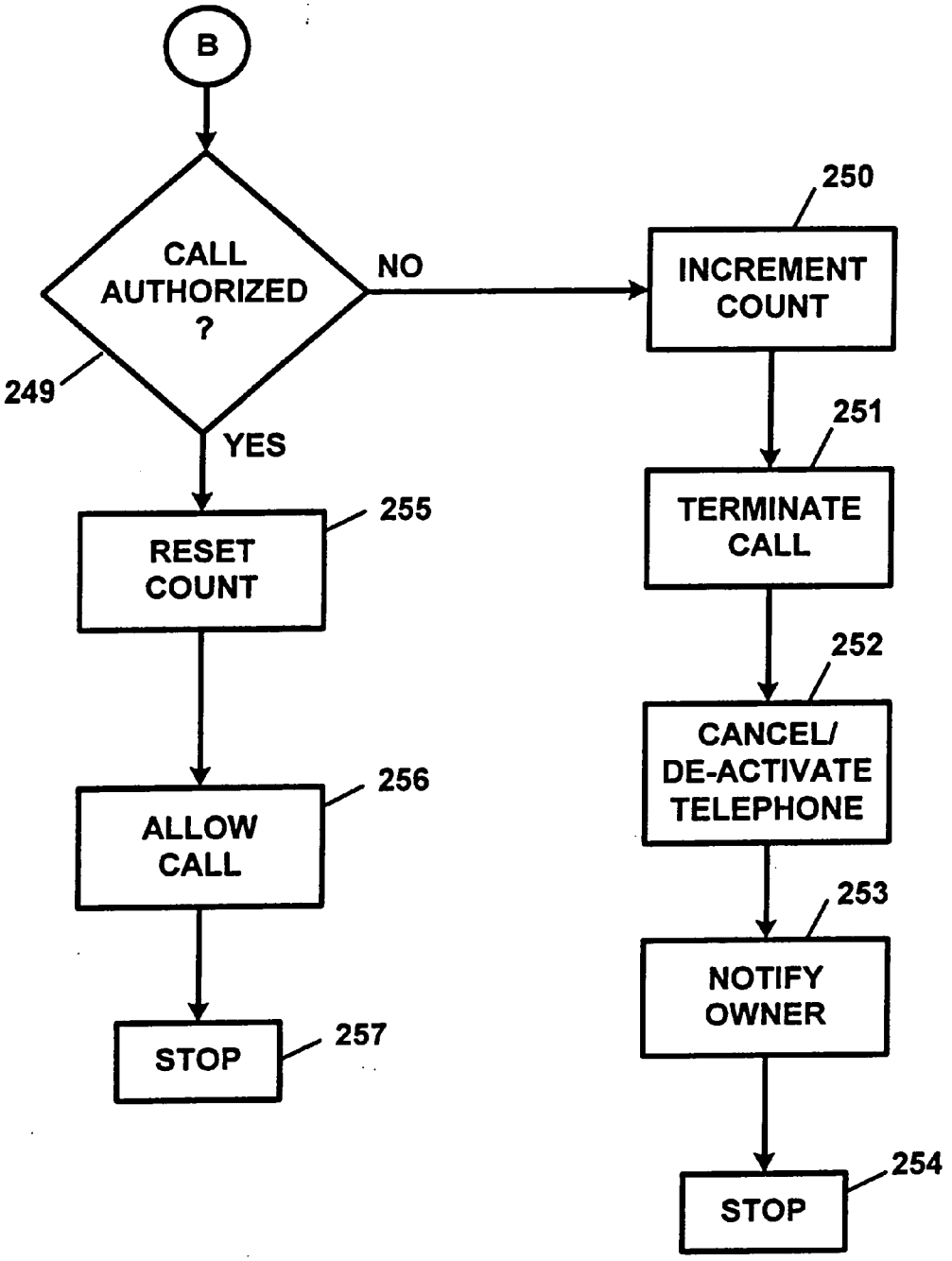
B
CALL AUTHORIZED ?
249
NO
YES
250
INCREMENT COUNT
251
TERMINATE CALL
252
CANCEL/ DE-ACTIVATE TELEPHONE
253
NOTIFY OWNER
254
STOP
255
RESET COUNT
256
ALLOW CALL
257
STOP

FIG. 9 (CONT.)

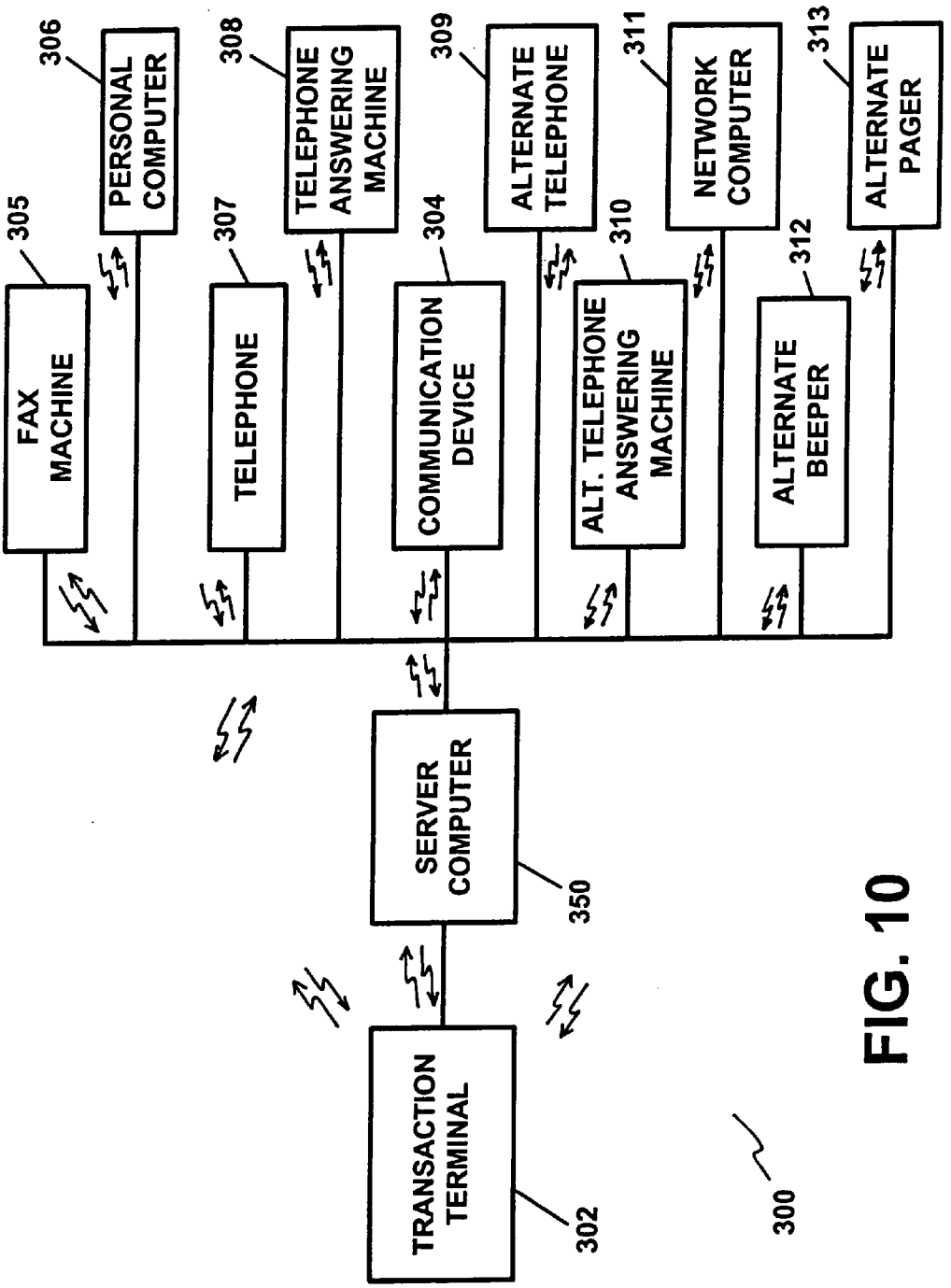
306
PERSONAL COMPUTER
308
TELEPHONE ANSWERING MACHINE
309
ALTERNATE TELEPHONE
311
NETWORK COMPUTER
313
ALTERNATE PAGER
305
FAX MACHINE
307
TELEPHONE
304
COMMUNICATION DEVICE
310
ALT. TELEPHONE ANSWERING MACHINE
312
ALTERNATE BEEPER
SERVER COMPUTER
350
TRANSACTION TERMINAL
302
300

FIG. 10

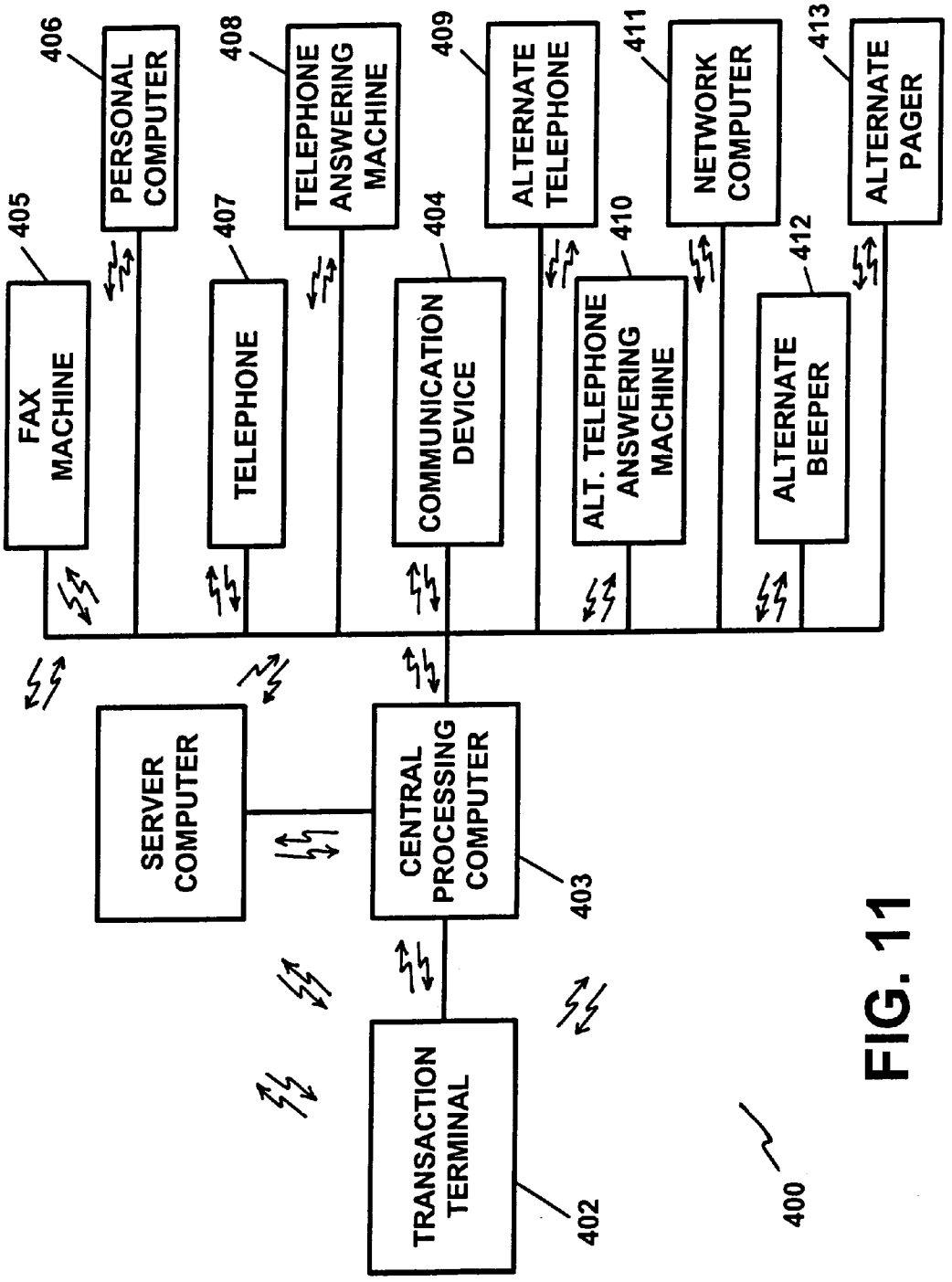
TRANSACTION TERMINAL
402
CENTRAL PROCESSING COMPUTER
403
SERVER COMPUTER
COMMUNICATION DEVICE
404
FAX MACHINE
405
PERSONAL COMPUTER
406
TELEPHONE
407
TELEPHONE ANSWERING MACHINE
408
ALTERNATE TELEPHONE
409
ALT. TELEPHONE ANSWERING MACHINE
410
NETWORK COMPUTER
411
ALTERNATE BEEPER
412
ALTERNATE PAGER
413
400

FIG. 11

TRANSACTION SECURITY APPARATUS AND METHOD

FIELD OF THE INVENTION

[0001] The present invention pertains to a financial transaction and/or wireless communication device authorization, notification and/or security apparatus and method, and, in particular to a financial transaction and/or wireless communication device authorization, notification and/or security apparatus and method for use in providing authorization, notification and/or security in conjunction with credit card, charge card and/or debit card use, savings and/or checking account activity and/or cellular telephone use.

BACKGROUND OF THE PRESENT INVENTION

[0002] Millions of individuals enjoy the convenience of utilizing credit cards, charge cards, debit cards, and/or currency or "smart" cards as a convenient way in which to purchase goods and/or services. By utilizing credit cards, charge cards, debit cards, and/or currency or "smart" cards, an individual may enter into a transaction without having to have cash or currency in hand or otherwise. In the case of credit cards, charge cards and debit cards, the individual, in effect obtains an instant loan of the funds needed to make a purchase and/or enter into a transaction. In the case of currency or "smart" cards, the individual may "store" an amount of money on the card(s) and, thereafter, utilize the card(s), instead of cash or currency, in order to make purchases and/or enter into transactions.

[0003] Millions of individuals also enjoy the benefits of having savings accounts, checking accounts and/or automated teller machine accounts which allow then to enjoy the security of saving their money in accounts which are usually insured and which allow them to, in some instances, earn interest on their money. In the case of checking accounts, individuals enjoy the convenience of writing checks and/or other transaction instruments which allow them to draw against their money without having to undergo the inconvenience of going to the bank or financial institution to withdraw their money, in currency form, and traveling to, in some cases, a distant location to either make a purchase, payment and/or to otherwise settle an account. In this regard, the ability to write checks, drafts and/or other instruments against an account is a very convenient manner in which to conduct transactions of any kind.

[0004] In the case of automated teller machines, individuals may conveniently withdraw and/or deposit money into a bank of other financial account.

[0005] Many individuals also enjoy the convenience of owning and/or using wireless, mobile or cellular telephones or devices as a means by which to make telephone calls when a conventional line or permanent telephone is not within reach and/or when the individual is "on the go", such as in an automobile, on foot, and/or in any other type of environment, such as away from home, when a conventional line or permanently fixed telephone is not available.

[0006] Unfortunately, with the convenience of each of the above credit cards, charge cards, debit cards, and/or currency or "smart" cards, savings accounts, checking accounts, automated teller machine accounts, and cellular telephones or cellular communications devices, comes many disadvantages and the opportunity for theft and/or fraud. In the case of credit cards, charge cards and/or debit cards, hundreds of millions, if not billions, of dollars a year are lost as a result of the theft of, and/or the fraudulent use of, credit cards, charge cards and/or debit cards, or the account numbers which correspond thereto.

[0007] A lost or stolen card may be utilized by an unauthorized individual to spend upwards of thousands of dollars before the unauthorized use is detected and/or before the cardholder can ascertain, and/or be notified, either by the card issuer or servicing institution or when the cardholder detects the unauthorized transaction on his or her monthly account statement, that the card is lost or stolen. Similarly, even in the absence of the physical card, an unauthorized individual may utilize the account number which corresponds to the card in order to make certain transactions.

[0008] While card holders are usually protected by various coverages which shield them from the liabilities associated with the fraudulent use of a card or the corresponding account number, the card issuers, credit, charge and/or debit card issuing companies and/or institutions, and/or their insurance companies, end up paying for the above described thefts and/or fraudulent and/or unauthorized uses. Ultimately, the consumer also shoulders the burden of the costs associated with these thefts and/or fraudulent and/or unauthorized uses in the form of increased prices.

[0009] While authorization terminals and/or devices are utilized at a point-of-sale and/or at the vendor's, the seller's, or the service provider's, location, these authorization terminals and/or devices typically are utilized to obtain an authorization from the card issuer or account servicing institution which, usually entails a screening of whether the card has been lost, stolen, cancelled, de-activated and/or whether the cardholder has exceeded and/or will exceed his or her credit limit. This current authorization practice fails to prevent the use of a lost or stolen card, or the unauthorized use of either the card or the account number corresponding thereof, if the card has not been reported, and/or discovered, to be lost, stolen or used without authorization and/or if the account credit limit has not yet been reached.

[0010] Current practices do not entail and/or do not include the provision for obtaining an authorization, and/or for providing notice to the cardholder before, during and/or shortly after a transaction, which cardholder authorization and/or notification procedure would be helpful and prove to be essential in preventing the fraudulent use and/or unauthorized use of a card and/or the account number corresponding thereto in a unauthorized transaction and/or shortly thereafter an unauthorized transaction has occurred, thereby minimizing the fraudulent and/or unauthorized use of the card and/or the account number corresponding thereto.

[0011] In the case of currency or "smart" cards, which typically may serve as bearer instruments, the monetary credit on these cards may be completely depleted before the card owner even discovers same to be lost or stolen.

[0012] In the case of savings accounts, checking accounts, and/or automated teller machine accounts, these accounts may be accessed, and funds be withdrawn, without the account owner's notification and/or knowledge. In the case of savings accounts and checking accounts, these accounts

may be accessed, and/or funds may be withdrawn therefrom, when checks drawn on insufficient funds are returned, and/or when the account number is inadvertently and/or fraudulently utilized in an endorsement, or otherwise, by an individual attempting to cash or perform a transaction with a fraudulent instrument, a forged instrument and/or an otherwise "bad" check. In these instances, the accounts and/or funds involved are usually accessed, invaded, and/or withdrawn from the account involved without the account owner being notified and/or having a say in the matter.

[0013] The account owner is typically notified of the above-described activity involving his or her account days later when he or she either receives a mailed notice and/or when they receive and review their monthly or periodic statement, which notice may be received at a time when it may be too late for the account owner to stop or reverse the transaction and/or, in the case of a check or draft returned for insufficient funds, at a time which is too late for the account owner to attempt to collect the funds. In the case of automated teller machine accounts, these accounts may be accessed, such as with a lost, stolen, or counterfeit card and/or with a card account number(s) and/or associated personal identification number(s), by a thief or by any other unauthorized person who could then make an unauthorized withdrawal(s) therefrom.

[0014] Once again, the account owner would not receive notification and/or have knowledge of the unauthorized transaction until they are notified by the bank or financial institution either via a monthly and/or periodic statement, and/or when they attempt a transaction at the automated teller machine and, at that time, discover that funds are missing and/or have been withdrawn. In the case of savings accounts, checking accounts and/or automated teller machine accounts, there is no present apparatus or method by which to provide notification to an account owner at the time of the unauthorized transaction and/or account activity and/or shortly thereafter same.

[0015] In the case of cellular telephones, recent practices involving "cloning" cellular telephones, which entails intercepting telephone transmissions from a cellular telephone, which transmissions contain the phone number of the transmitting phone and/or the associated personal identification number (PIN), and utilizing the intercepted information to program a different cellular phone which by then be utilized in conjunction with the account of the "cloned" cellular telephone, has also resulted in widespread theft and fraudulent use of cellular telephones and/or cellular communications devices The "cloned" telephones are typically sold on the "black" market. In these instances, the cellular telephone owner has no way of knowing whether, or when, his or her cellular transmissions are being intercepted and/or if and when a "cloned" cellular phone is created and/or is utilized on, or over, his or her cellular telephone account.

[0016] Typically, the cellular telephone owner first becomes aware of the unauthorized usage of his or her cellular telephone account when he or she receives their telephone account statement. Once again, in the time between the "cloning" of the cellular telephone and the discovery of same, hundreds, if not thousands, of dollars worth of cellular telephone calls may have been made before the unauthorized use is detected. At present, there is no apparatus or method for providing notification to the cellular telephone owner as to when his or her cellular telephone and/or cellular telephone number is, or has been, utilized in an unauthorized manner.

SUMMARY OF THE INVENTION

[0017] The present invention provides an apparatus and a method for providing financial transaction authorization, notification and/or security, and, in particular, provides an apparatus and a method for providing financial transaction authorization, notification and/or security in conjunction with credit card, charge card, debit card, and/or currency or "smart" card use, savings and/or checking account activity and use and/or cellular telephone use, which overcomes the shortcomings of the prior art.

[0018] The apparatus and method of the present invention, which is utilized in conjunction with a credit card, a charge card, a debit card and/or a currency or "smart" card authorization process comprises a point-of-sale authorization terminal which terminals are found in various establishments and which are utilized in conjunction with the sale of goods and/or services and/or in other types of financial transactions. The point-of-sale terminal may be utilized at the location of the seller and/or service provider, such as at a retail store or office, and/or the point-of-sale terminal may be located at the site of the goods or service provider or vendor, such as in cases when the sale is a telephone order, mail order and/or other type of transaction, including transactions made on, or over, the INTERNET and/or other on-line services or communication networks or mediums.

[0019] The apparatus also comprises a central processing computer for processing the credit, charge, debit and/or currency or "smart" card and/or other transaction requests, and data and/or information pertaining thereto, and/or the authorization pertaining thereto. The central processing computer may service any predefined group of card holders and/or any pre-defined group(s) and/or type(s) of cards. The central processing computer may also process accounts for any of the various banks and/or financial institutions which issue and/or manage credit cards, charge cards, debit cards and/or currency or "smart" cards and/or process or manage these accounts.

[0020] The point-of-sale terminal is linked and/or connected to the central processing computer via a communications system, link and/or medium, such as, for example, a telephone network or line. The communications system which is utilized may be any communications system and may include telecommunication systems, satellite communications systems, radio communication systems, digital satellite communications systems, personal communications services communication systems as well as any other appropriate communications system.

[0021] The point-of-sale terminal transmits signals and/or data to the central processing computer as well as receives signals and/or data from the central processing computer.

[0022] The apparatus also comprises a cardholder communication device which may receive signals and/or data from either or both of the point-of-sale terminal and/or the central processing computer. The communication device may also be equipped with a transmitter for transmitting signals and/or data to the central processing computer. In this regard, the central processing computer transmits sig-

nals and/or data to the communication device as well as receives signals and/or data from the communication device. The communication device may also transmit signals and/or data directly to the point-of-sale terminal and receive signals and/or data directly from the point-of-sale terminal.

[0023] The point-of-sale terminal may transmit signals and/or data to the central processing computer and to the communication device and may receive signals and/or data from the central processing computer and from the communication device.

[0024] The communication device may be a wireless device. In this regard, the communication device may be a telephone signal receiving device which may be a beeper or pager or other device which may be carried by the cardholder and/or be kept on and/or close to the cardholder's person so that the central processing computer may transmit signals and/or data to the communication device so as to communication with the cardholder at any time and at any location.

[0025] The apparatus may also comprise a facsimile (fax) machine, a personal computer, a telephone, a telephone answering machine, an alternate telephone, an alternate telephone answering machine, a network computer and/or an alternate beeper or pager. The central processing computer may be linked with the above fax machine, personal computer, telephone, associated answering machine, alternate telephone and associated answering machine, network computer, and/or alternate beeper or pager via any suitable communication system. The telecommunications link or telephone line or link, which may or may not be a wireless link depending on the device and/or the circumstances, is utilized in order to link the central processing computer with each of the fax machine, the personal computer, the telephone, the associated answering machine, the alternate telephone, alternate telephone answering machine, the network computer and/or the alternate beeper or pager.

[0026] The apparatus and method of the present invention may be utilized in order to provide cardholder authorization, notification and/or security measures in financial transactions involving credit cards, charge cards, debit cards, and/or currency or "smart" cards and may be utilized in order to obtain cardholder authorization in a card-related transaction.

[0027] The apparatus and method of the present invention may commence operation when the card, which is to be utilized in a credit card, charge card, debit card, and/or currency or "smart" card, or number corresponding thereto, transaction, is offered at the point-of-sale or other appropriate location whereupon the attendant or point-of-sale terminal operator will activate the apparatus in any typical manner, such as by obtaining a phone line and entering card information into the point-of-sale terminal. Data entry may typically be performed by swiping the magnetic strip of the card through a card reader of the point-of-sale terminal. The information and/or data pertinent to the transaction and the card is then transmitted to the central processing computer.

[0028] The central processing computer will then process the information and/or data pertinent to the transaction and to the particular card account and may request, if needed, that the point-of-sale operator enter the transaction amount. The central processing computer will process the information and/or data pertinent to the transaction in conjunction with the card account information in order to determine if the card has been lost, stolen and/or cancelled and/or de-activated. Further, the central processing computer may perform a test in order to determine if the maximum credit, charge or debit account limit has been exceeded and/or if the card has been depleted of its currency value.

[0029] Once all of the information and/or data processing has been completed, the central processing computer will determine if the card has been lost, stolen, and/or cancelled and/or de-activated and/or if the credit, charge or debit account limit of the card has been reached and/or exceeded and/or if the currency value of the card has been depleted.

[0030] The central processing computer may also perform a test in order to determine if the predetermined maximum number of unauthorized transactions have occurred on the account. If any of the above listed conditions are found to exist (i.e. card is lost, stolen, cancelled and/or de-activated, or credit, charge or debit account limit has been reached or exceeded, currency value depleted, or unauthorized transaction limit reached or exceeded), the central processing computer may transmit a signal to the point-of-sale terminal indicating that the transaction is not approved and/or is not authorized. The point-of-sale terminal operator may then cancel the transaction. The point-of-sale terminal operator may then confiscate the card and/or alert the authorities.

[0031] If, however, the central processing computer should determine that the card is not lost, stolen, cancelled or de-activated, or that the credit, charge or debit account limit of the card has not been reached or exceeded, or that the of unauthorized transactions count has not reached a predefined limit, the central processing computer may transmit a signal and/or data to the communication device which is located with the cardholder. The central processing computer may then also transmit respective signals and/or data to any one or more of the cardholder's designated fax machine, personal computer, telephone, telephone answering machine, alternate telephone, alternate telephone answering machine, network computer, and/or alternate beeper or pager, either sequentially and/or simultaneously.

[0032] The information and/or data transmitted to the communication device includes information and/or data identifying the transaction and may include the name of the store or the service provider and the amount of the transaction. The information and/or data may also provide the time of the transaction, the location (i.e. city, town, village, state, country, etc.) of the transaction. The information and/or data may also include the phone number of the central processing office and/or computer servicing the account so that the cardholder may telephone same in order to authorize or cancel the transaction. The information and/or data may also be supplemented to include the type of goods and/or services involved in the transaction, if such information can be entered at the point-of-sale terminal.

[0033] The information and/or data which is transmitted from the central processing computer, and received at the communication device, may be displayed to the cardholder on a display device of the communication device. The information displayed on the display device may include the name of the store or the service provider, the amount of the transaction, the time of the transaction and the location of the transaction. The information and/or data may also be supplemented to include the type of goods and/or services

involved in the transaction, if such information can be entered at the point-of-sale terminal.

[0034] The apparatus, or the central processing computer, may then wait for the cardholder to respond to the transmission. During this time, the cardholder may either utilize the reply or two-way pager feature on the communication device in order to either approve, or authorize, the transaction or to disapprove, or void the transaction. The apparatus may then determine if the cardholder has made a reply or response within a pre-defined time limit. The cardholder may also transmit a signal via an appropriate key or button suspending use of the card such as when he or she may first be apprised of the fact that the card has been lost or stolen. If the cardholder has replied or responded to the notice, the response may then be transmitted to, and received by, the central processing computer. The cardholder may also simply telephone the central processing office or processing center, servicing the card, so as to personally notify the office or center of his or her response to the central processing computer transmission regarding the transaction.

[0035] If the cardholder does not reply to the central processing computer within a pre-specified time, the central processing computer may transmit a signal and/or data to the point-of-sale terminal indicating that, with the exception of receiving the authorization of the cardholder, the transaction is otherwise approved. The central processing computer may also simply transmit a signal indicating that the transaction is not authorized and, therefore, should be cancelled of voided. The point-of-sale terminal operator may then either proceed to complete the transaction, try to obtain additional information from the purchaser, or cancel the transaction.

[0036] The action taken by the point-of-sale terminal operator may be dictated by the specific agreement in effect between the sales or service establishment and the bank or financial institution administering the card accounts. Thereafter, the operation of the apparatus will cease. If the cardholder should reply or respond to the transaction notice at a later period, this information may then be utilized in order to approve, or to disapprove, and/or to dispute the transaction.

[0037] The central processing computer, after receiving the reply or response from the cardholder, may then identify the cardholder response. The apparatus, or the central processing computer, may then determine if the cardholder has replied or responded so as to authorize the transaction. If the cardholder's response is to cancel, to disapprove or not authorize, the transaction, the central processing computer may transmit a signal and/or data to the point-of-sale terminal which will notify and/or instruct the point-of-sale terminal operator that the transaction is not authorized and, therefore, should be cancelled or voided. The point-of-sale terminal operator may then cancel the transaction. The point-of-sale terminal operator may then confiscate the card and/or alert the authorities. Thereafter, the apparatus will cease operation.

[0038] If, however, the central processing computer identifies the cardholder reply or response as being one to authorize the transaction, the central processing computer may then transmit a signal and/or data to the point-of-sale terminal which may notify and/or instruct the point-of-sale terminal operator that the transaction is authorized and/or approved. The point-of-sale terminal operator may then complete the transaction. Thereafter, operation of the apparatus will cease.

[0039] In cases when the cardholder is the party to the transaction, he or she, having the communication device with, or on, his or her person, may authorize the transaction at the point-of-sale location or from his or her remote location. The cardholder may also program and/or set the communication device to automatically authorize or disapprove or disallow transactions.

[0040] In this regard, the communication device may be programmable so as to receive and/or to analyze the transaction information and/or data and reply or respond to same automatically and/or with preset or programmed replies and/or responses. The communication device may also be programmable so as to limit and/or restrict the amounts and/or types of transactions, and/or the goods and/or services which may be purchased with the card, the stores or service providers which may be authorized to accept the card, limits on the dollar amounts of transactions pertaining to each authorized vendor, seller and/or service provider, daily spending limits, and/or the geographical area or location to which authorized use may be limited, and/or authorized times for card usage (i.e. specific days, dates, time of day, time of month, year, etc.), and/or any other limitation and/or restriction regarding amount of the transaction, the parties involved, the geographical area limitations, and/or the times of allowed usage. In this regard, the cardholder may provide for temporary transaction and/or purchasing amounts.

[0041] The communication device may also be provided with a memory device for storing any number of transactions so that the cardholder may review his account activity and/or transactions which have occurred involving his or her card. In this manner, the cardholder may "scroll" through and/or in other ways review account activity at any time and for any time period and/or interval. The communication device may also be equipped to service more than one card. For example, a plurality of cards may be serviced with or by a single communication device.

[0042] The apparatus and method of the present invention provides for the real-time authorization, notification and/or security of financial transactions involving credit cards, charge cards, debit cards, and/or currency or "smart" cards, which enables a cardholder to monitor, in real-time, all activity involving his or her card(s) and the corresponding account numbers. The apparatus and method of the present invention also provides a means and a mechanism by which to inform a cardholder that his or her card(s) are lost, stolen and/or are or have been fraudulently used, and/or when his or her card number(s) are or have been fraudulently used, and provides an indication to the cardholder of where his or her card(s) are being or have been utilized in transactions. The cardholder may then report the card lost or stolen and/or cancel and/or de-activate the card.

[0043] The present invention also provides a means and a mechanism by which to monitor the number of transactions which are unauthorized by the cardholder and determine whether or not to authorize transactions and/or to cancel or to de-activate the card(s). In the above manner, the present invention provides an apparatus and a method to prevent and/or to drastically limit fraudulent and/or unauthorized use

of credit cards, charge cards, debit cards, and/or currency or "smart" cards, and/or the account numbers corresponding thereto.

[0044] The present invention, in an alternate embodiment, may be utilized so as to provide authorization, notification and/or security in banking and related financial transactions involving checking accounts, savings accounts and/or automated teller machine (ATM) transactions and/or other transactions wherein an account holder can be notified of a transaction and/or attempted transaction. In such an alternate embodiment, the apparatus comprises a banking transaction terminal, which terminals are found in banks and financial institutions, and which may be a teller terminal, a processing computer terminal and/or an ATM terminal. The apparatus also comprises a central processing computer and a communication device. The banking transaction terminal transmits an authorization request which may include the data pertaining to the particular account which is accessed and/or involved in the transaction and the type and the amount of the transaction, over a communications medium, to the central processing computer for processing the transaction request and/or the authorization pertaining thereto.

[0045] The central processing computer may transmit signals and/or data pertaining to the transaction to the communication device. The apparatus may then operate and/or be utilized in a manner similar to, or analogous to, the apparatus utilized in conjunction with credit cards, charge cards, debit cards, and/or currency or "smart" cards, and/or the account numbers corresponding thereto, as described above.

[0046] In this manner, the apparatus and method of the present invention may provide for the real-time notification of banking and/or financial transactions involving various bank and/or financial accounts and enable an account owner to monitor, in real-time, all activity involving his or her bank and/or financial accounts. The apparatus and method of the present invention also provides a means and a mechanism by which to inform an account owner that his or her account is overdrawn, has been charged against and/or that his or her ATM card(s) are lost, stolen, cancelled or de-activated and/or provides an indication to the account owner of when and/or where his or her accounts are being accessed in transactions and/or are being otherwise compromised. The account owner may then report the unauthorized activity, or the discovery of a lost or stolen ATM card, and/or cancel and/or de-activate the respective account(s) and/or ATM card(s).

[0047] In another alternate embodiment, the apparatus and method of the present invention may also be utilized so as to provide authorization, notification and/or security for, and in conjunction with, cellular and/or mobile telephones and/or communication systems wherein a cellular or mobile telephone owner and/or account holder can be notified of a transmission and/or an attempted transmission and/or telephone call made with his or her cellular or mobile telephone and/or with the telephone number and/or account information, which information may include, but not be limited to, transmission codes and/or associated signatures and/or data which corresponds to his or her cellular or mobile telephone.

[0048] The apparatus utilized in conjunction with a cellular telephone comprises a cellular telephone which serves as the transaction terminal, a central processing computer and a communication device. The cellular telephone transmits signals and/or data which are received by the central processing computer. The central processing computer may then transmit signals and/or data which are received by the communication device. The apparatus may then operate and/or be utilized in a manner similar to, or analogous to, the apparatus utilized in conjunction with credit cards, charge cards, debit cards, and/or currency or "smart" cards, savings accounts, checking accounts and/or automated teller machine accounts, and/or the account numbers corresponding thereto, as described above.

[0049] The apparatus and method of the present invention provides for the real-time notification of cellular or mobile telephone usage which enables a cellular telephone owner and/or account holder to monitor, in real-time, all activity involving his or her cellular telephone. The apparatus and method of the present invention also provides a means and a mechanism by which to inform a cellular telephone owner and/or account holder that his or her cellular telephone is lost, stolen and/or is being fraudulently used, and/or that the telephone number is being used in an unauthorized manner, and provides an indication to the cellular telephone owner and/or account holder of how, when and where his or her cellular telephone, or the account number which corresponds thereto, is being utilized in cellular communication transactions. The cellular telephone owner and/or account holder may then report the cellular telephone lost or stolen and/or cancel and/or de-activate the cellular telephone and/or the corresponding account and/or the account number.

[0050] The present invention also provides an apparatus and a method by which to monitor the number of cellular or mobile telephone transactions which are unauthorized by the cellular or mobile telephone owner and to determine whether or not a central processing computer should cancel or de-activate the cellular telephone and/or the account. In the above manner, the present invention provides an apparatus and a method for preventing and/or for drastically limiting fraudulent use and/or unauthorized use of cellular or mobile telephones and/or cellular or mobile telephone numbers. The present invention also provides an apparatus and a method for combating cellular telephone "cloning."

[0051] The apparatus and method of the present invention may also be utilized in connection with an on-line service and/or on, or over, the Internet and/or the World Wide Web, so as to provide for a means by which the authorized user or operator may utilize the apparatus in conjunction with a home and/or a personal computer and/or a commercial or industrial computer system (i.e., an internet server computer) and/or any other appropriate device, including a personal communication and/or computing device, in a network environment, and which may be utilized over any suitable and/or appropriate communications network or medium.

[0052] The communications system utilized in conjunction with the present invention may operate anywhere in the electromagnetic and/or the radio spectrum. Personal communication service (PCS) systems and devices, including stationary, portable and/or hand-held devices, and digital signal communications devices and systems, may also be utilized. The communication system or medium should provide for the transmission and for the reception of a multitude of remote electrical, electronic, electromagnetic, and/or other suitable signals, over long distances and/or in a mobile and/or a wireless communications environment.

[0053] The apparatus and method of the present invention may be utilized in conjunction any appropriate communications device which may be utilized with any appropriate communications system and/or medium.

[0054] The present invention may also be equipped with, and be utilized with, hardware and software necessary for providing self-monitoring functions, automatic control and/or responses to occurrences, automatic notice of an occurrence and/or a situation, to an owner, user and/or authorized individual. In this regard, any and all of the embodiments described above may comprise a monitoring device, a triggering device and/or any other suitable device for detecting an occurrence and/or identifying a situation which may warrant providing notice to a card holder, account owner, cellular telephone owner and/or an authorized individual.

[0055] In this regard, the apparatus and method may provide a transmission of any appropriate signal from a transmitter and, if desired, from a voice synthesizer to the card holder, account owner and/or cellular telephone owner. The signal utilized could be in the form of a communication transmission, depending upon the communication medium utilized, a telephone call, a voice message, a beeper and/or a pager message, an electronic mail message, a fax transmission, and/or any other mode of communication which may be utilized with any of the apparatuses, devices and/or components described herein.

[0056] In this regard, the apparatus may be designed or programmed to telephone the cardholder, account owner and/or cellular telephone owner, and/or other authorized individual, at a primary phone number, at an alternate or forwarding phone number, and/or at a business phone number, send a beeper or pager message to the individual, and/or send a fax message, an electronic mail (e-mail) message, a voice mail message and/or an answering service message to, or for, the card holder, account owner and/or cellular telephone owner or authorized individual. In this manner, the apparatus may communicate with the desired individual by utilizing multiple notification and/or reporting avenues and/or devices so as to provide and to ensure that best efforts are to be made to communicate with the desired individual as soon as possible.

[0057] The apparatus and method of the present invention may also be programmable for programmed and/or automatic activation, self-activation, programmed and/or automatic operation and/or self-operation. The apparatus and method of the present invention may provide for an immediate, as well as for a deferred, authorization, notification and/or security in any of the above-described financial transactions and/or wireless communication transactions.

[0058] The present invention may also be utilized in such a manner that a communication device may receive and/or transmit signals, data and/or information which pertains to multiple accounts and/or multiple types of accounts in order to provide authorization, notification and/or security for a plurality of any of the accounts described herein.

[0059] The present invention, in any of the embodiments described herein, may also be designed to be user-friendly. In this regard, the present invention may be menu-driven, and/or its operation may be menu-selected, from audio menus, visual menus, or both audio and visual menus.

[0060] Accordingly, it is an object of the present invention to provide an apparatus and a method for providing authorization, notification and/or security in financial transactions involving credit cards, charge cards, debit cards, and/or currency or "smart cards, savings accounts, checking accounts and/or automated teller machine accounts and for providing authorization, notification and/or security in wireless communications transactions involving cellular telephones and/or other cellular communications devices.

[0061] It is another object of the present invention to provide an apparatus and a method for providing authorization, notification and/or security in financial transactions involving credit cards, charge cards, debit cards, wherein the cardholder may authorize or disapprove of a transaction, in real time.

[0062] It is another object of the present invention to provide an apparatus and a method for providing authorization, notification and/or security in financial transactions involving savings account, checking accounts and/or automated teller machine accounts, wherein the account owner may authorize or disapprove of a transaction, in real time.

[0063] It is another object of the present invention to provide an apparatus and a method for providing authorization, notification and/or security in wireless communications transactions involving cellular telephones and/or other cellular communications devices, wherein the cellular telephone or cellular communication device owner may authorize or disapprove of a transaction, in real time.

[0064] It is another object of the present invention to provide an apparatus and a method for providing authorization, notification and/or security in financial transactions and/or in wireless communication transactions, which may be utilized on, over, or in conjunction with, an on-line service and/or the Internet, the World Wide Web, and/or any other suitable communication network or medium.

[0065] It is still another object of the present invention to provide an apparatus and a method for providing authorization, notification and/or security in financial transactions and/or in wireless communications transactions, which is programmable and/or which may provide for pre-programmed and/or pre-specified transaction authorization and/or transaction disapproval.

[0066] It is still another object of the present invention to provide an apparatus and a method for providing authorization, notification and/or security in financial transactions and/or in wireless communications transactions, which may be utilized over any suitable communications network or medium.

[0067] It is still another object of the present invention to provide an apparatus and a method for providing authorization, notification and/or security in financial transactions and/or in wireless communication transactions, wherein the respective cardholder, account owner or cellular telephone owner may increase or decrease the respective account credit limits, account activity, funds available, calling areas and/or usage limits at any time and/or from any location.

[0068] It is still another object of the present invention to provide an apparatus and a method for providing authorization, notification and/or security in financial transactions and/or in wireless communications transactions, which is programmable with respect to authorized times of usage (i.e. specific days, dates, time of day, time of month, year, etc.),

and/or any other limitations regarding amount of transaction limitations, parties involved, and/or geographical area and/or location of allowed usage.

[0069] It is yet another object of the present invention to provide an apparatus and a method for providing authorization, notification and/or security in financial transactions, and/or in wireless communication transactions, for a plurality of accounts and types of accounts.

[0070] Other objects and advantages of the present invention will be apparent to those skilled in the art upon a review of the Description of the Preferred Embodiment taken in conjunction with the Drawings which follow.

BRIEF DESCRIPTION OF THE DRAWINGS

[0071] In the Drawings:

[0072] **FIG. 1** illustrates a block diagram of the apparatus of the present invention which is utilized in conjunction with a credit card, a charge card, a debit card, and/or a currency or "smart" card authorization process;

[0073] **FIG. 2** illustrates the various components of the apparatus of **FIG. 1**;

[0074] **FIG. 3** illustrates the operation of the apparatus of **FIG. 1** in flow diagram form;

[0075] **FIG. 4** illustrates a block diagram of an alternate embodiment of the apparatus of the present invention which is utilized in conjunction with a checking account, a savings account and/or an automated teller machine transaction;

[0076] **FIG. 5** illustrates the various components of the apparatus of **FIG. 4**;

[0077] **FIG. 6** illustrates the operation of the apparatus of **FIG. 4** in flow diagram form;

[0078] **FIG. 7** illustrates a block diagram of an alternate embodiment of the apparatus of the present invention which is utilized in conjunction with a cellular and/or a mobile telephone;

[0079] **FIG. 8** illustrates the various components of the apparatus of **FIG. 7**;

[0080] **FIG. 9** illustrates the operation of the apparatus of **FIG. 7** in flow diagram form;

[0081] **FIG. 10** illustrates yet another alternate embodiment of the present invention wherein the apparatus of the present invention is utilized on, or over, an on-line service, the INTERNET and/or the World Wide Web or other suitable communication network or medium; and

[0082] **FIG. 11** illustrates yet another alternate embodiment of the present invention which is also utilized in conjunction with an on-line service and/or on, or over, the INTERNET and/or the World Wide Web or the suitable communication network or medium.

DESCRIPTION OF THE PREFERRED EMBODIMENT

[0083] **FIG. 1** illustrates a block diagram of a preferred embodiment of the apparatus of the present invention, which is utilized in conjunction with a credit card, a charge card and/or a debit card authorization process. The apparatus of **FIG. 1** is denoted generally by the reference numeral **1**. With reference to **FIG. 1**, the apparatus consists of a point-of-sale authorization terminal **2** which terminals are found in various establishments and utilized in conjunction with the sale of goods and/or services and in other financial transactions.

[0084] The point-of-sale authorization terminal **2** (hereinafter referred to as "point-of-sale terminal") may be any of the widely used and well known terminals or devices for providing point-of-sale authorization for transactions involving credit cards, charge cards, debit cards and/or other currency or "smart" cards. The point-of-sale terminal **2** may be utilized at the location of the goods and/or service provider, such as the retail store or office, and/or the point-of-sale terminal **2** may be located at the site of the goods or service provider or vendor, such as in cases when the sale is a telephone order, mail order and/or other type of transaction, including transactions made over the INTERNET and/or other on-line mediums.

[0085] Typically, the terminals and devices for providing point-of-sale authorization comprise and utilize a magnetic card reader and/or magnetic strip card reader, for reading data from the magnetic strip located on credit cards, charge cards, debit cards and/or the currency or "smart" cards. The point-of-sale terminal **2** transmits an authorization request which may include the data pertaining to the particular card utilized in the transaction and the amount of the transaction, over a communications medium, to a central processing computer for processing the credit, charge, debit and/or other transaction request and/or the authorization request pertaining thereto.

[0086] The point-of-sale terminal **2** also receives the authorization and/or authorization data and/or information from the central processing computer. A printed transaction receipt may also be provided at and/or obtained via the point-of-sale terminal **2**, or peripheral device associated therewith, for printing a transaction receipt which is usually or typically signed by the card holder in completing the transaction. The point-of-sale terminal **2** may be designed to read other data besides and/or in addition to magnetic card data. The point-of-sale terminal **2** may also comprise, or have associated therewith, a keypad for the manual entry of transaction information and/or data, such as the amount of the transaction. The point-of-sale terminal **2** may also be an integral component of a cash register or other transaction terminal or device which may provide for the automatic entry of transaction information and/or data.

[0087] The apparatus **1** also comprises a central processing computer **3** which services any predefined group of cardholders. For example, the central processing computer **3** may handle all MASTERCARD transactions for a given financial and/or credit institution. The central processing computer **3**, for example, may process credit cards, charge cards, debit cards, and/or currency or "smart" cards and/or combinations of same, such as, for example, VISA®, MASTERCARD®, and/or AMERICAN EXPRESS® cards and process and/or mange account information pertaining thereto. The central processing computer **3** may also process accounts for any of the various banks and/or financial institutions which issue and/or manage credit cards, charge cards, debit cards and/or currency or "smart" cards (hereinafter referred to as "card" or "cards") and/or process or manage these accounts.

[0088] The central processing computer **3** may be a mainframe computer, a mini-computer, a micro-computer, a

server computer, such as those utilized in conjunction with on-line services and/or in a network environment, and/or any other suitable computer or computer system.

[0089] In the preferred embodiment, the point-of-sale terminal **2** is linked and/or connected to the central processing computer **3** via a telecommunications system, link and/or medium (hereinafter referred to as "communications system") such as, for example, a telephone network or line. It is important to note that the communications system which is utilized may be any communications system and may include telecommunication systems, satellite communications systems, radio communication systems, digital communications systems, digital satellite communications systems, personal communications services communication systems as well as any other appropriate communications system. The point-of-sale terminal **2** transmits signals and/or data to the central processing computer **3** as well as receives signals and/or data from the central processing computer **3**.

[0090] The apparatus **1** also comprises a cardholder communication device **4** which may receive signals and/or data from either or both of the point-of-sale terminal **2** and/or the central processing computer **3**. In the preferred embodiment of **FIG. 1**, the communication device **4** receives signals and data from the central processing computer **3** with said signals being transmitted via a suitable communication system. In the preferred embodiment, the communications system utilized for transmitting signals and/or data to the communication device **4** is a wireless telephone line and the communication device **4** is a telephone signal receiving device such as a telephone beeper or pager. The communication device **4** or pager receives the wireless telephone signals and/or data from the central processing computer **3** during the authorization procedure as will be described in more detail below.

[0091] In the preferred embodiment, the communication device **4** is also equipped with a transmitter for transmitting signals and/or data to the central processing computer **3**. In this regard, the central processing computer **3** transmits signals and/or data to the communication device **4** as well as receives signals and/or data from the communication device **4**. The communication device **4** may also transmit signals and/or data directly to the point-of-sale terminal **2** and receive signals and/or data directly from the point-of-sale terminal **2**. In the preferred embodiment, the point-of-sale terminal **2** transmits signals and/or data to the central processing computer **3** and receives signals and/or data from the central processing computer **3**. Further, in the preferred embodiment, the communication device **4** receives signals and/or data from the central processing computer **3** and transmits signals and/or data to the central processing computer **3**.

[0092] As noted above, the communication device **4** is a wireless device. In this regard, the communication device **4** or pager may be carried by the cardholder and/or be kept on and/or close to the cardholder's person so that the central processing computer **3** may transmit signals and/or data to the communication device **4** so as to communicate with the cardholder at any time. The communication device **4** may also comprise any one or more of a facsimile (fax) machine, a personal computer, a telephone, a telephone answering machine, an alternate telephone, an alternate telephone answering machine, a network computer, and/or an alternate beeper or pager. The central processing computer **3** may be linked with each of the above devices via any suitable communication system.

[0093] In the preferred embodiment, the apparatus **1** also comprises a facsimile (fax) machine **5**, a personal computer **6**, a telephone **7**, a telephone answering machine **8**, an alternate telephone **9**, an alternate telephone answering machine **10**, a network computer **11**, an alternate beeper **12** and an alternate pager **13**. The central processing computer **3** may be linked with the above fax machine **5**, personal computer **6**, telephone **7**, associated answering machine **8**, alternate telephone **9**, alternate telephone answering machine **10**, network computer **11**, and/or alternate beeper **12** or pager **13**, via any suitable communication system. In the preferred embodiment, a telecommunications link or telephone network, line or link, which may or may not be a wireless link depending on the device and/or the circumstances, is utilized in order to link the central processing computer **3** with each of the fax machine **5**, the personal computer **6**, the telephone **7**, the associated answering machine **8**, the alternate telephone **9**, alternate telephone answering machine **10**, the network computer **11**, and/or the alternate beeper **12** and the alternate pager **13**.

[0094] **FIG. 2** illustrates the various components of the apparatus **1** of **FIG. 1**. In **FIG. 2**, the point-of-sale terminal **2**, in the preferred embodiment, comprises a central processing unit or CPU **2**A, a magnetic card reader **2**B, which is connected to the CPU **2**A, associated random access memory **2**C (RAM) and read only memory **2**D (ROM) devices, which are also connected to the CPU **2**A, a user input device **2**E, which is typically a keypad or other suitable input device for inputting data into the terminal **2** and which is also connected to the CPU **2**A, and a display device **2**F for displaying information and/or data to a user.

[0095] The point-of-sale terminal **2** also comprises a transmitter **2**G for transmitting signals and/or data to the central processing computer **3**, and/or to the communication device **4** and/or to any other device associated with the cardholder and/or the apparatus, if desired. The transmitter **2**G is also connected to the CPU **2**A. The point-of-sale terminal **2** also comprises a receiver **2**H for receiving signals and/or data from the central processing computer **3**, and from the communication device **4** and/or any other associated device which may be utilized, if desired. The receiver **2**H is also connected to the CPU **2**A. The point-of-sale terminal **2** also comprises a printer **2**I or other appropriate output device for outputting data to the user. The printer **2**I is also connected to the CPU **2**A. In the preferred embodiment, the printer **2**I prints receipts corresponding to the transaction.

[0096] In **FIG. 2**, the central processing computer **3**, in the preferred embodiment, comprises a central processing unit or CPU **3**A, associated random access memory **3**B (RAM) and read only memory **3**C (ROM) devices, which are connected to the CPU **3**A, a user input device **3**D, which is a keypad and/or any other suitable input device for inputting data into the central processing computer **3** and which is also connected to the CPU **3**A and a display device **3**E for displaying information and/or data to a user or operator.

[0097] The central processing computer **3** also comprises a transmitter(s) **3**F for transmitting signals and/or data to the point-of-sale terminal **2** and to the communication device **4** and/or to any one or more of the fax machine **5**, personal

computer **6**, telephone **7**, telephone answering machine **8**, alternate telephone **9**, alternate telephone answering machine **10**, network computer **11** and/or alternate beeper **12** or alternate pager **13**. The transmitter(s) **3**F is also connected to the CPU **3**A. The central processing computer **3** also comprises a receiver(s) **3**G for receiving signals and/or data from the point-of-sale terminal **2** and from the communication device **4** and/or from any other suitable device which may be utilized in conjunction with the apparatus **1**. The receiver(s) **3**G is also connected to the CPU **3**A. The central processing computer **3**, in any and/or all of the embodiments described herein, may utilize a fax/modem and/or any other suitable computer communication device.

[**0098**] The central processing computer also comprises a database(s) **3**H which contains account information and data pertaining to the cardholders and/or to the cardholder accounts. The database **3**H contains information about the cardholder, the cardholders account number, credit and/or account limits, previous purchases, number of unauthorized purchases made to the account and other information and/or data necessary to manage and/or process an account transaction as described herein.

[**0099**] The database **3**H may also comprise data and/or information regarding specific limitations and/or restrictions which may be placed on a particular account, which may be pre-selected and/or programmed by the cardholder and which may include limitations and/or restrictions on the usage of the card. The limitations and/or restrictions may include the types of transactions which are allowed and/or authorized, the goods and/or services which may be purchased with the card, the vendors, stores and/or service provider which may be authorized to accept the card, limits on the dollar amounts of transactions pertaining to each authorized vendor, seller and/or service provider, daily spending limits, and/or the geographical area or location wherein authorized card use may be limited, and/or authorized times for card usage (i.e. specific days, dates, time of day, time of month, year, etc.), and/or any other limitation and/or restriction regarding amount of transaction, parties involved, geographical area, and/or times of allowed usage. The database **3**H is also connected to the CPU **3**A. The central processing computer **3** also comprises a printer **3**I or other appropriate output device for outputting information and/or data to a user or operator.

[**0100**] In **FIG. 2**, the communication device **4**, in the preferred embodiment, comprises a central processing unit or CPU **4**A, associated random access memory **4**B (RAM) and read only memory **4**C (ROM) devices, which are connected to the CPU **4**A, a user input device **4**D, which is a keypad or a plurality of keys and/or switches for inputting data into the communication device **4** and which is also connected to the CPU **4**A, and a display device **4**E, for displaying information and/or data to the cardholder, and a database **4**F, which are also connected to the CPU **4**A. The communication device **4** also comprises a receiver **4**G for receiving signals and/or data from the central processing computer **3** and which is also connected to the CPU **4**A, a transmitter **4**H for transmitting signals and/or data to the central processing computer **3** and which is also connected to the CPU **4**A.

[**0101**] In the preferred embodiment, the communication device **4** which is utilized is a pager with a reply feature and/or device. A two-way pager and/or pager systems may also be utilized for implementing the respective component system(s) in the communication device **4**/central processing computer **3** combination and/or link.

[**0102**] The apparatus **1** of the present invention, in the preferred embodiment, may be utilized in order to facilitate cardholder authorization, notification and/or security measures in financial transactions involving credit cards, charge cards, debit cards, and/or currency or "smart" cards, in the manner described below and with reference to **FIG. 3**. In this manner, the apparatus **1** of the present invention may be utilized to obtain cardholder authorization in a card-related transaction.

[**0103**] **FIG. 3** illustrates the operation of the apparatus **1** in flow diagram form. With reference to **FIG. 3**, the operation of the apparatus **1** commences at step **30** when the card, which is to be utilized in a credit card, charge card, debit card, and/or currency or "smart" card transaction, is presented in the transaction. At step **31**, the sales or service attendant or point-of-sale terminal operator (hereinafter "point-of-sale terminal operator") will activate the apparatus **1** in any typical manner, such as by obtaining a phone line and entering card information into the point-of-sale terminal **2**. This data entry is typically performed by swiping the magnetic strip of the card through the card reader **2**B. The information and/or data pertinent to the transaction, and/or the card, is then transmitted, at step **32**, to the central processing computer **3**.

[**0104**] The central processing computer **3** will, at step **33**, process the information and/or data pertinent to the transaction and/or to the particular card account and may request, if needed, that the point-of-sale operator enter the transaction amount. The central processing computer **3** will then process the information and/or data pertinent to the transaction in conjunction with the card account information in order to determine if the card has been lost, stolen and/or cancelled and/or de-activated. Further, the central processing computer **3** will perform a test to determine if the card has reached and/or exceeded the maximum credit, charge or debit limit and/or if the card has been depleted of its currency value.

[**0105**] The central processing computer **3** may utilize any of the widely known data processing and/or software routines, which are known to those skilled in that art, in order to process transaction requests and/or authorizations involving the use of the respective card(s). Once the information and/or data processing has been completed at step **33**, the central processing computer **3**, at step **34**, will determine if the card has been lost, stolen, and/or cancelled and/or de-activated, or if the credit, charge or debit limit of the card has been reached and/or exceeded, or if the currency value of the card has been depleted.

[**0106**] The central processing computer **3** will, at step **34**, also perform a test in order to determine if the predetermined maximum number of unauthorized transactions have occurred on the account. The unauthorized transactions count refers to transactions which are not authorized by the cardholder as will be described herein. The authorized transaction count (UNAUTHCT) is a variable which is pre-set to zero (0) at the time the card account is issued. Each time an unauthorized transaction occurs, the unauthorized transaction count is incremented by one (1). Once the

unauthorized transaction count reaches a pre-defined limit of, for example, three (3), the central processing computer **3** will cancel the transaction and de-activate the card. The central processing computer **3** will then notify the cardholder. In this manner, the apparatus **1** will enable the central processing computer **3** of an issuing and/or card servicing institution to cancel and/or de-activate the card, either permanently and/or temporarily, in cases when the cardholder may have failed to respond or to reply to transaction notices, which may be the case when the cardholder is not aware that the card has been lost or stolen, or when the card or account number has been duplicated, "cloned", or in other ways utilized without the cardholder's authorization, and/or when the cardholder is unable to respond or reply to the transaction notices for some other reason(s). This feature of the present invention serves to put a usage limit on the use of the card(s). The central processing computer **3**, at step **34**, will also perform a test(s) to determine if any additional limitations and/or restrictions have been met and/or satisfied.

[**0107**] If any of the above listed conditions exist (i.e. card is lost, stolen, cancelled and/or de-activated, or credit, charge or debit limit is reached and/or exceeded, currency value depleted, unauthorized transaction limit reached or exceeded limitations and/or restrictions violated, etc.), the central processing computer **3** will, at step **35**, transmit a signal to the point-of-sale terminal **2** indicating that the transaction is not approved and/or is not authorized. The point-of-sale terminal operator may then cancel the transaction, at step **36**. The point-of-sale terminal operator may then confiscate the card and/or alert the authorities. Upon the completion of step **36**, the apparatus will cease operation at step **55**.

[**0108**] If, at step **34**, the central processing computer **3** determines that the card is not lost, stolen, cancelled or de-activated, or that the credit, charge or debit limit of the card has not been reached or exceeded, or that the of unauthorized transactions count (UNAUTHCT) has not reached a pre-defined limit, or whether any other pre-defined, pre-selected and/or programmed limitation(s) and/or restriction(s) have been met, have been satisfied and/or have been reconciled, the central processing computer **3** will, at step **37**, transmit a signal and/or data to the communication device **4** which is located at the cardholder.

[**0109**] At step **37**, the central processing computer **3** will then also transmit respective signals and/or data to any one or more of the cardholder's designated fax machine **5**, personal computer **6**, telephone **7**, telephone answering machine **8**, alternate telephone **9**, alternate telephone answering machine **10**, network computer **11**, and/or alternate beeper **12** or alternate pager **13**.

[**0110**] The information and/or data which is transmitted to the communication device **4** includes information and/or data identifying the transaction and may include the name of the store or the service provider and the amount of the transaction. The information and/or data may also provide the time of the transaction, the location (i.e. city, town, village, state, country etc.) of the transaction. The information and/or data may also include the phone number of the central processing office and/or computer servicing the account so that the cardholder may telephone same in order to authorize or cancel the transaction. The information and/or data may also be supplemented to include the type of goods and/or services involved in the transaction, if such information can be entered at the point-of-sale terminal **2**.

[**0111**] At step **38**, the information and/or data which is transmitted from the central processing computer **3** and received at the communication device **4** is displayed to the cardholder on the display device **4**E of the communication device **4**. The information displayed on the display device **4**E includes the name of the store or the service provider, the amount of the transaction, the time of the transaction and the location of the transaction. The information and/or data may also be supplemented to include the type of goods and/or services involved in the transaction, if such information can be entered at the point-of-sale terminal **2**.

[**0112**] The apparatus **1** will then, at step **39**, wait for the cardholder to respond to the transmission. During this time, the cardholder may either utilize the reply or two-way pager feature on the communication device **4** in order to either approve or authorize the transaction or disapprove of or void the transaction. At step **39**, the central processing computer **3** will also receive the response if one is sent. At step **40**, the apparatus **1** will determine if the cardholder has made a reply or response within the pre-defined time limit which is chosen, in the preferred embodiment, to be one (1) minute. The cardholder may also transmit a signal via an appropriate key or button suspending use of the card such as when he or she may first be apprised of the fact that the card has been lost or stolen. In instances when the communication device **4** does not have a reply or two-way pager feature, the cardholder may simply telephone the central processing office or a processing center for the card in order to personally appraise the center or office of his or her response to the central processing computer transmission regarding the transaction.

[**0113**] If the cardholder does not respond or reply to the central processing office within the pre-specified time, chosen, in the preferred embodiment, to be one (1) minute, the central office computer will, at step **41**, increment the unauthorized transaction count (UNAUTHCT) by one (1) and will, at step **42**, transmit a signal and/or data to the point-of-sale terminal **2** indicating that, with the exception of receiving the authorization of the cardholder, the transaction is otherwise approved. The point-of-sale terminal operator may then, at step **43**, either proceed to consummate the transaction, try to obtain additional information from the purchaser, or cancel the transaction. The action taken by the point-of-sale terminal operator may be dictated by the specific agreement in effect between the sales and/or service provider establishment and the bank or financial institution administering the card account. Upon the completion of step **43**, the operation of the apparatus **1** will cease at step **44**. If the cardholder should reply or respond to the transaction notice at a later period, the response or reply information may then be utilized in order to approve of, or to disapprove and/or to dispute, the transaction.

[**0114**] If, at step **40**, the response or reply is determined to be timely, the central processing computer **3** will, at step **45**, process and identify the cardholder response. At step **46**, the central processing computer **3** will determine if the cardholder has replied or responded so as to authorize the transaction. If the cardholder's response is to cancel, disapprove or, or not to authorize, the transaction, the central processing computer **3** will, at step **47**, increment an unau-

thorized transaction count by 1. At this juncture, it is important to note that the unauthorized count (UNAUTHCT) is set to zero at the time of the issuance of the card. After the unauthorized transaction count has been incremented, the central processing computer **3** will, at step **48**, transmit a signal and/or data to the point-of-sale terminal **2** which will notify and/or instruct the point-of-sale terminal operator that the transaction is not authorized and should, therefore, be cancelled or voided. The point-of-sale terminal operator may then cancel the transaction at step **49**. The point-of-sale terminal operator may then confiscate the card and/or alert the authorities. Upon the completion of step **49**, the apparatus will cease operation at step **50**.

[**0115**] If, at step **46**, the central processing computer **3** identifies the cardholder reply or response as being one to authorize the transaction, the central processing computer **3**, at step **51**, will reset the unauthorized transaction count (UNAUTHCT) to 0. An unauthorized transaction count (UNAUTHCT) of 0 will signify that any string of unauthorized transactions has now been broken by the cardholder, and further, that the present transaction is approved by the cardholder. The central processing computer **3** will then, at step **52**, transmit a signal and/or data to the point-of-sale terminal **2** which will notify and/or instruct the point-of-sale terminal operator that the transaction is authorized and/or approved.

[**0116**] The point-of-sale terminal operator may then complete the transaction, at step **53**. After the transaction has been completed at step **53**, the operation of the apparatus **1** will cease at step **54**.

[**0117**] In instances when the cardholder is a party to the transaction, he or she, having the communication device **4** on his or her person, may authorize the transaction at the point-of-sale location. If the transaction is a telephone and/or other remotely made transaction, the cardholder may authorize the transaction from his or her remote location. The cardholder may also program and/or set the communication device **4** to automatically authorize or disapprove or disallow transactions. In this regard, the communication device **4** may be programmable so as to receive and analyze the transaction information and/or data and reply and/or respond to same automatically and/or with preset and/or programmed relies and/or responses. The communication device **4** may also be programmable so as to limit the amounts of transactions. In this regard, the cardholder may provide for temporary transaction and/or purchasing amounts.

[**0118**] The communication device **4**, in the preferred embodiment, is provided with a memory device for storing any number of transactions so that the cardholder may review his or her card and/or account activity and/or transactions which have occurred involving his or her card. In this manner, the cardholder may "scroll" through and/or in other ways review card and/or account activity. The communication device **4** may also be equipped to service more than one card. For example, a cardholder's MASTERCARD®, VISA®, and/or AMERICAN EXPRESS® card or cards and the accounts corresponding thereto may all be serviced with or by a single communication device **4**.

[**0119**] The apparatus and method of the present invention provides for the real-time notification of financial transactions involving credit cards, charge cards, debit cards, and/or currency or "smart" cards, which enables a cardholder to monitor, in real-time, activity involving his or her card(s) and the corresponding accounts. The apparatus and method of the present invention also provides a means and a mechanism by which to inform a cardholder that his or her card(s) are lost or stolen, and/or that his or her card(s), and/or the account numbers corresponding thereto, are utilized without his or her authorization and also provides an indication to the cardholder of where his or her card(s) or corresponding account number(s) is being utilized in transactions. The cardholder may then report the card lost or stolen and/or cancel and/or de-activate the card and/or the account.

[**0120**] The present invention also provides a means and a mechanism by which to monitor the number of transactions which are unauthorized by the cardholder and to determine whether or not to authorize transactions and/or cancel or de-activate the card(s) and/or the account. In the above manner, the apparatus and method of the present invention provides an apparatus and a method for preventing and/or for drastically limiting fraudulent and/or unauthorized use of credit cards, charge cards, debit cards, and/or currency or "smart" cards and/or the account numbers corresponding thereto.

[**0121**] The present invention, in an alternate embodiment, may be utilized so as to provide authorization, notification and/or security in banking and related financial transactions involving checking accounts, savings accounts and/or automated teller machine (ATM) accounts and transactions and other transactions wherein an account owner may be notified of a transaction and/or an attempted transaction.

[**0122**] **FIG. 4** illustrates a block diagram of an alternate embodiment of the apparatus of the present invention which is utilized in conjunction with a checking account, savings account and/or ATM account and/or transaction (hereinafter referred to as a "banking transaction") and/or the authorization process involved therewith. The apparatus of **FIG. 4** is denoted generally by the reference numeral **100**. In **FIG. 4**, the apparatus **100** consists of a banking transaction terminal which terminals are found in banks and financial establishments. In the preferred embodiment, the banking transaction terminal **102** is a teller terminal, a processing computer terminal and/or an ATM terminal. Any other terminal or similar device may also be utilized as the banking transaction terminal **102** depending upon the application and/or the transaction.

[**0123**] The banking transaction terminal **102** (hereinafter referred to as "banking terminal") may be any of the widely used and well known terminals or devices for providing banking transactions over-the-counter, ATM transactions and/or in any other type of financial transactions, including clearing transactions, check clearing and/or account charging and/or charge-back transactions, which transactions banks and financial institutions perform and/or engage in.

[**0124**] Typically, the banking terminals and/or devices comprise a computer terminal having an input device such as a keyboard and/or various reader and/or scanning device for reading and/or scanning, respectively, information and/or data necessary in order to perform the transaction. The banking terminal transmits an authorization request which may include the data pertaining to the particular account which is accessed and/or involved in the transaction and the

type and the amount of the transaction, over a communications medium, to a central processing computer for processing the transaction, the transaction request and/or the authorization request pertaining thereto. The banking terminal may transmit the transaction authorization request and/or notice to a central processing computer via a central bank computer (not shown) which may be a central computer at the particular bank or financial institution. The central processing computer may also be a central computer system which is not located at the bank or financial institution, but rather, services the particular bank or financial institution or a group of banks or financial institutions.

[0125] The banking terminal **102** also receives the transaction and/or authorization data and/or information from the central processing computer. If a central bank computer is utilized, the data transmitted from the central processing computer would be transmitted to the banking terminal **102** via the central bank computer. A printed transaction receipt may also be provided at and/or obtained via the banking terminal **102**, or peripheral device associated therewith, for printing a transaction receipt which is usually provided to the account holder at the time and/or location of the transaction.

[0126] The banking terminal **102** may also comprise, and/or have associated therewith, a keypad for the manual entry of transaction information and/or data, such as the amount of the transaction, account number, etc. The banking terminal **102** may also be an integral component of a teller and/or cashier work station and/or other transaction terminals and/or devices, including those which may provide for the automatic entry of transaction information and/or data.

[0127] The apparatus **100** also comprises a central processing computer **103** which services any bank and/or financial institution and/or any pre-defined group of banks and/or financial institutions and/or any number of accounts associated therewith. For example, the central processing computer **103** may handle all checking accounts, savings accounts and/or other accounts for a given bank or banks. The central processing computer **103**, for example, may process and maintain records of deposits, withdrawals, checks cashed, drafts, ATM deposits, ATM withdrawals, charges made against an account, credits made to an account, etc., and/or any combinations of same. The central processing computer **103** may process accounts for any of the various banks and/or financial institutions.

[0128] In the preferred embodiment, the banking terminal **102** is linked and/or connected to the central processing computer **103** via a telecommunications system, link and/or medium (hereinafter referred to as "communications system") such as, for example, a telephone network or line. As noted above, the banking terminal **102** may or may not be linked to the central processing computer **103** via a central bank computer. It is important to note that the communications system which is utilized may be any communications system and may include telecommunication systems, satellite communications systems, radio communication systems, digital communications systems, digital satellite communications systems, personal communications services communication systems as well as any other appropriate communications system. The banking terminal **102** transmits signals and/or data to the central processing computer **103** as well as receives signals and/or data from the central processing computer **103**.

[0129] The central processing computer **103** may be a mainframe computer, a mini-computer, a micro-computer, a server computer, such as those utilized in conjunction with on-line services and/or in a network environment, and/or any other suitable computer or computer system.

[0130] The apparatus **100** also comprises an account owner communication device **104** which may receive signals and/or data from either or both of the banking transaction terminal **102** and/or the central processing computer **103**. In the preferred embodiment of **FIG. 4**, the communication device **104** receives signals and/or data from the central processing computer **103** with said signals being transmitted via a suitable communication system. In the preferred embodiment, the communications system utilized for transmitting signals and/or data to the communication device **104** is a wireless telephone line and the communication device **104** is a wireless telephone signal receiving device such as a telephone beeper or pager. The communication device **104**, which may be a pager, receives the wireless telephone signals and/or data from the central processing computer **103** during the authorization procedure as will be described in more detail below.

[0131] In the preferred embodiment, the communication device **104** is also equipped with a transmitter for transmitting signals and/or data to the central processing computer **103**. In this regard, the central processing computer **103** transmits signals and/or data to the communication device **104** as well as receives signals and/or data from the communication device **104**. The communication device **104** may also transmit signals and/or data directly to the banking terminal **102** and receive signals and/or data directly from the banking terminal **102**. In the preferred embodiment, the banking terminal **102** transmits signals and/or data to the central processing computer **103** and receives signals and/or data from the central processing computer **103**. Further, in the preferred embodiment, the communication device **104** receives signals and/or data from the central processing computer **3** and transmits signals and/or data to the central processing computer **103**.

[0132] As noted above, the communication device **104** is a wireless device. In this regard, the communication device **104** or pager may be carried by the account owner and/or be kept on and/or close to the account owner's person so that the central processing computer **103** may transmit signals and/or data to the communication device **104** so as to communication with the account owner at any time.

[0133] In the preferred embodiment, the apparatus **100** also comprises a facsimile (fax) machine **105**, a personal computer **106**, a telephone **107**, a telephone answering machine **108**, an alternate telephone **109**, an alternate telephone answering machine **110**, a network computer **111**, and/or an alternate beeper **112** or alternate pager **113**. The central processing computer **103** may be linked with the above fax machine **105**, personal computer **106**, telephone **107**, associated answering machine **108**, alternate telephone **109**, alternate telephone answering machine **110**, network computer **111** alternate beeper **112** and alternate pager **113**, via any suitable communication system. In the preferred embodiment, a telecommunications link or telephone line or link, which may or may not be a wireless link, depending on the device and/or the circumstances, is utilized in order to link the central processing computer **103** with each of the fax

machine **105**, the personal computer **106**, the telephone **107**, the associated answering machine **108**, the alternate telephone **109**, the alternate telephone answering machine **110**, the network computer **111**, the alternate beeper **112** and the alternate pager **113**.

[**0134**] **FIG. 5** illustrates the various components of the apparatus **100** of **FIG. 4**. In **FIG. 5**, the banking terminal **102**, in the preferred embodiment, comprises a central processing unit or CPU **102**A, a scanner or reader **102**B, which is connected to the CPU **102**A, associated random access memory **102**C (RAM) and read only memory **102**D (ROM) devices, which are also connected to the CPU **102**A, a user input device **102**E, which is typically a keypad or other suitable input device for inputting data into the banking terminal **102** and which is also connected to the CPU **102**A, and a display device **102**F for displaying information and/or data to a user or operator, which display device **102**F is also connected to the CPU **102**A.

[**0135**] The banking terminal **102** also comprises a transmitter **102**G for transmitting signals and/or data to the central processing computer **103**, and/or to the communication device **104** and/or to any other device associated with the account owner and/or the apparatus, if desired. The transmitter **102**G is also connected to the CPU **102**A. The banking terminal **102** also comprises a receiver **102**H for receiving signals and/or data from the central processing computer **103**, and from the communication device **104** and/or from any other associated device which may be utilized, if desired. The receiver **102**H is also connected to the CPU **102**A. The banking terminal **102** also comprises a printer **102**I or other appropriate output device for outputting data to the operator. The printer **102**I is also connected to the CPU **102**A. In the preferred embodiment, the printer **102**I prints receipts corresponding to the transaction.

[**0136**] In **FIG. 5**, the central processing computer **103**, in the preferred embodiment, comprises a central processing unit or CPU **103**A, associated random access memory **103**B (RAM) and read only memory **103**C (ROM) devices, which are connected to the CPU **103**A, a user input device **103**D, which is a keypad or any other suitable input device, for inputting data into the central processing computer **103** and which is also connected to the CPU **103**A, and a display device **103**E for displaying information and/or data to a user or operator.

[**0137**] The central processing computer **103** also comprises a transmitter(s) **103**F for transmitting signals and/or data to the banking terminal **102** and to the communication device **104** and/or to any one or more of the fax machine **105**, the personal computer **106**, the telephone **107**, the telephone answering machine **108**, the alternate telephone **109**, the alternate telephone answering machine **110**, the network computer **111**, the alternate beeper **112**, and/or the alternate pager **113**. The transmitter(s) **103**F is also connected to the CPU **103**A. The central processing computer **103** also comprises a receiver(s) **103**G for receiving signals and/or data from the banking transaction terminal **102** and from the communication device **104** and/or from any other suitable device which may be utilized in conjunction with the apparatus **100**. The receiver(s) **103**G is also connected to the CPU **103**A.

[**0138**] The central processing computer **103** also comprises a database(s) **103**H which contains account information and data pertaining to the account owner's account(s). The database **103**H contains information about the account owner, the account number, etc., and any other information and/or data necessary to the manage and/or process an account and/or account transaction as described herein. The database **103**H is also connected to the CPU **103**A. The central processing computer **103** also comprises a printer **103**I or other appropriate output device for outputting information and/or data to a user or operator, which printer **103**I or other output device is also connected to the CPU **103**A.

[**0139**] In **FIG. 5**, the communication device **104**, in the preferred embodiment, comprises a central processing unit or CPU **104**A, associated random access memory **104**B (RAM) and read only memory **104**C (ROM) devices, which are also connected to the CPU **104**A, a user input device **104**D, which is a keypad or a plurality of keys and/or switches for inputting data into the communication device **104** and which is also connected to the CPU **104**A, and a display device **104**E, for displaying information and/or data to the account owner, and a database **104**F. This display device **104**E and the database **104**F are also connected to the CPU **104**A. The communication device **104** also comprises a receiver **104**G for receiving signals and/or data from the central processing computer **103** and which is also connected to the CPU **104**A, and a transmitter **104**H for transmitting signals and/or data to the central processing computer **103** and which is also connected to the CPU **104**A.

[**0140**] In the preferred embodiment, the communication device **104**, which is utilized, is a pager with a reply feature and/or device. A two-way pager and/or pager system(s) may also be utilized for implementing the respective component systems in the communication device **104**/central processing computer **103** combination and/or link.

[**0141**] The apparatus **100** of the present invention, in the preferred embodiment, may be utilized in order to facilitate account owner authorization, notification and/or security, in financial transactions involving checking accounts, savings accounts and ATM accounts, and/or any transactions involving same in the manner described below and with reference to **FIG. 6**. In this manner, the apparatus and method of the present invention may be utilized to obtain account owner authorization in a banking and/or financial transaction.

[**0142**] **FIG. 6** illustrates the operation of the apparatus **100** in flow diagram form. With reference to **FIG. 6**, the operation of the apparatus **100** commences at step **130** when the financial transaction and/or instrument or ATM card is presented to the bank or financial institution employee, representative and/or placed in a card reader, respectively. At step **131**, the employee or representative of the bank or financial institution will activate the apparatus, via the banking transaction terminal **102**, in any typical manner, such as by entering account and/or card information, into the banking transaction terminal **102**. This data entry is typically performed by manual data entry and/or via a card reader, depending upon the transaction. For example, if a person offers a check for cashing and provides a savings account or a checking account number, as the means by which to endorse the check, the employee or representative will enter the savings account or checking account number into the banking terminal **102** for processing. Similarly, if one desires to withdraw money from an ATM account, the card reader will read and enter the account number and/or infor-

mation for processing. The information and/or data pertinent to the transaction and the card is then transmitted, at step **132**, to the central processing computer **103**.

[**0143**] The central processing computer **103** will then, at step **133**, process the information and/or data pertinent to the transaction and to the particular account. The central processing computer **103** may utilize any of the widely known data processing and/or software routines, which are known to those skilled in that art, in order to process transaction requests and/or authorizations involving the use of the respective account(s) and/or related card(s).

[**0144**] The central processing computer **103** will process the information and/or data pertinent to the transaction in conjunction with the account information in order to determine the status of the account (i.e. whether any holds have been placed on the account, such as those prohibiting withdrawals). Further, the central processing computer **103** will then perform a test, at step **134**, in order to determine if the transaction amount has reached and/or exceeded the amount available in the account and/or if the ATM card has been reported lost, stolen, cancelled and/or de-activated, and/or determine whether any other pre-defined, pre-selected and/or programmed limitation(s) and/or restriction(s) have been met, satisfied and/or reconciled. The central processing computer **103** will also perform a test in order to determine if the predetermined maximum number count of unauthorized transactions, pre-defined in the preferred embodiment to be one (1), has occurred on the account.

[**0145**] The unauthorized transaction count refers to a count of the transactions which are not authorized by the account owner as will be described herein. The authorized transaction count (UNAUTHCT) is a variable which is pre-set to zero (0) at the time the account is opened. Each time an unauthorized transaction occurs, the unauthorized transaction count is incremented by one. Once the unauthorized transaction count reaches a pre-defined limit of, for example, one (1), although it may be pre-defined to be zero (0), the central processing computer **103** will cancel the transaction and de-activate the account and/or the ATM card. The central processing computer **103** will then notify the account owner. In this manner, the apparatus **100** will enable the central processing computer **103** of a banking and/or financial institution to cancel and/or de-activate the account and/or the ATM card, either permanently or temporarily, in cases when the account owner may have failed to respond or to reply to transaction notices, which may be the case when the account owner is not aware that the account has been charged, overdrawn, and/or that the ATM card has been lost or stolen, cancelled or de-activated, duplicated, "cloned", or in other ways utilized without the account owner's knowledge or authorization, or when the account owner is unable to respond or reply to the transaction notices for some other reason(s). This feature of the present invention serves to place a transaction stop limit on the account and/or on the use of the ATM card.

[**0146**] If any of the above listed conditions exist (i.e. account overdrawn and/or ATM card is lost, stolen, cancelled and/or de-activated), the central processing computer **103** will, at step **135**, transmit a signal to the banking transaction terminal **102** indicating that the transaction is not approved and/or is not authorized. The banking terminal operator, or employee, or representative, may then cancel the transaction at step **136**. The employee or representative may then alert the authorities and/or confiscate the ATM card. In the case when an ATM machine is utilized as the banking terminal **102**, the ATM machine may confiscate the ATM card automatically. Upon the completion of step **136**, the apparatus will cease operation at step **137**.

[**0147**] If, at step **134**, the central processing computer **103** determines that the account is not overdrawn or that the ATM card is not lost, stolen, cancelled or de-activated, or that the of unauthorized transactions count (UNAUTHCT) has not reached a predefined limit, and/or that pre-defined or pre-specified limitations and/or restrictions have been met, the central processing computer **103** will, at step **138**, transmit a signal and/or data to the communication device **104** which is located at the account owner.

[**0148**] At step **138**, the central processing computer **103** will then also transmit respective signals and/or data to any one or more of the cardholder's designated fax machine **105**, personal computer **106**, telephone **107**, telephone answering machine **108**, alternate telephone **109**, alternate telephone answering machine **110**, network computer **111**, and/or alternate beeper **112** or alternate pager **113**.

[**0149**] The information and/or data transmitted to the communication device **104** includes information and data identifying the transaction and may include the name of the bank or financial institution where the transaction is taking place, the account number and/or description, the amount of the transaction, the time of the transaction and the location (i.e. city, town, village, state, country etc.) of the transaction. The information and/or data may also include the phone number of the central processing office and/or computer servicing, and/or the banking and/or financial institution handling, the account so that the account owner may telephone same in order to authorize or cancel the transaction. The information and/or data may also be supplemented to include a description of the person seeking to make the transaction and the type of transaction sought (i.e. cash withdrawal, cashing of check, etc.).

[**0150**] At step **139**, the information and/or data which is transmitted from the central processing computer **103**, and received at the communication device **104**, is displayed to the account owner on the display device **104**E of the communication device **104**. The information displayed on the display device **104** includes the name of the banking and/or financial institution, the amount of the transaction, the time of the transaction and the location of the transaction. The information and/or data may also include the type of transaction and a description of the person seeking to make the transaction, etc.

[**0151**] The apparatus **100**, at step **140**, will then wait for the account owner to respond to the transmission. During this time, the account owner may either utilize the reply or two-way pager feature on the communication device **104** in order to either approve or authorize the transaction or disapprove of, or void, the transaction. At step **140**, the apparatus **100** will receive the reply or response from the account owner. At step **141**, the central processing computer **103** will determine if the account owner has made a reply or response within the pre-defined time limit which is chosen, in the preferred embodiment, to be one (1) minute. The account owner may also transmit a signal via an appropriate key or button suspending use of the account or ATM card,

such as when he or she may first be apprised of the fact that the account is being unlawfully accessed, or the use thereof is unauthorized, or that the ATM card has been lost or stolen.

[0152] In instances when the communication device **104** does not have a reply or two-way pager feature, the account owner may simply telephone the central processing office or processing center and/or the banking or financial institution so as to personally reply or respond to the authorization request.

[0153] If, at step **141**, it is determined that the account owner's reply or response was not made within the pre-specified time, chosen in the preferred embodiment to be one (1) minute, the central processing computer **103** will, at step **142**, increment the unauthorized transaction count (UNAUTHCT) by one (1) and will; at step **143**, transmit a signal and/or data to the banking transaction terminal **102** indicating that the transaction is not authorized by the account owner. The banking terminal operator may then, at step **144**, either cancel the transaction, proceed to consummate the transaction, and/or attempt to obtain additional information or identification from the customer and/or obtain an alternate account number from which to draw against.

[0154] The action taken by the banking transaction terminal operator may be dictated by the specific agreement in effect between the account owner and the bank or financial institution administering the accounts. Upon the completion of step **144**, the operation of the apparatus will cease at step **145**. If the account owner should reply or respond to the transaction notice at a later period, this information may then be utilized to approve of or to disapprove and/or to dispute the transaction.

[0155] If, at step **141**, it is determined that the reply or response was timely, the central processing computer **103** will, at step **146**, process and identify the account owner response. At step **147**, the central processing computer **103** will determine if the account owner has authorized the transaction. If the account owner's response is to cancel, to disapprove, or to not authorize, the transaction, the central processing computer **103** will, at step **148**, increment the unauthorized transaction count (UNAUTHCT) by 1. At this juncture, it is important to note that the unauthorized count (UNAUTHCT) is set to zero at the time of the opening of the account.

[0156] After the unauthorized transaction count has been incremented, the central processing computer **103** will, at step **149**, transmit a signal and/or data to the banking terminal **102** which will notify and/or instruct the banking terminal operator that the transaction is not authorized and should, therefore, be cancelled or voided. The banking terminal operator may then cancel the transaction at step **150**. The banking transaction terminal operator or the ATM machine may then confiscate the ATM card and/or alert the authorities. Upon the completion of step **150**, the apparatus will cease operation at step **151**.

[0157] If, at step **147**, the central processing computer **103** identifies the account owner's reply or response as being one to authorize the transaction, the central processing computer **103** will, at step **151**, reset the unauthorized transaction count (UNAUTHCT) to zero (0). The central processing computer **103** will then, at step **153**, transmit a signal and/or data to the banking terminal **102** which will notify and/or instruct the banking terminal operator, and/or the ATM machine, that the transaction is authorized and/or approved. The banking terminal operator, and/or the ATM machine, may then complete the transaction, at step **154**. After the transaction has been completed at step **154**, the operation of the apparatus **100** will cease at step **155**.

[0158] In instances when the account owner is a party to the transaction, which should typically be the case in banking and/or financial transactions, the account owner, having the communication device **104** on his or her person, may authorize the transaction at the point of the transaction. If the transaction is an overnight or other remotely made transaction, such as in clearing and/or account settling transactions, the account owner may authorize the transaction from his or her remote location.

[0159] The account owner may also program and/or set the communication device **104** so as to automatically authorize or disapprove or disallow transactions. In this regard, the communication device **104** may be programmable so as to receive and analyze the transaction information and/or data and reply or respond to same automatically and/or with preset or programmed replies and/or responses. The communication device **104** may also be programmable so as to limit the amounts of transactions. In this regard, the account owner may provide for temporary transaction types and/or amounts.

[0160] The communication device **104**, in the preferred embodiment, is provided with a memory device for storing any number of transactions so that the account owner may review his or her account activity and/or transactions which have occurred involving his or her accounts and/or ATM card. In this manner, the account owner may "scroll" through and/or in other ways review account activity. The communication device **104** may also be equipped to service more than one bank and/or financial account and/or ATM card. For example, any number and/or types of accounts may be serviced with or by a single communication device **104**.

[0161] The apparatus and method of the present invention provides for the real-time notification of banking and/or financial transactions involving various bank and/or financial accounts and enables an account owner to monitor, in real-time, activity involving his or her bank and/or financial accounts and/or ATM card(s).

[0162] The apparatus and method of the present invention also provides a means and a mechanism by which to inform an account owner that his or her account is overdrawn, has been charged against and/or that his or her ATM card(s) are lost, stolen, cancelled or de-activated and/or provides an indication to the account owner of when and/or where his or her accounts are being accessed in transactions. The account owner may then report the unauthorized activity, and/or the discovery of a lost or stolen ATM card, and/or cancel and/or de-activate the respective account(s) and/or ATM card(s).

[0163] The present invention, in an alternate embodiment, may also be utilized so as to provide authorization, notification and/or security for, and in conjunction with, cellular and/or mobile telephone and/or communication systems wherein a cellular or mobile telephone owner and/or account owner may be notified of a transmission and/or an attempted transmission and/or telephone call made with his or her

cellular or mobile telephone and/or with the telephone number and or transmission codes and/or associated signatures and/or data which corresponds to his or her cellular or mobile telephone.

[0164] **FIG. 7** illustrates a block diagram of an alternate embodiment of the apparatus of the present invention which is utilized in conjunction with a cellular or mobile telephone (hereinafter referred to as "cellular telephone") and/or corresponding cellular telephone account number and/or information related thereto. The apparatus of **FIG. 7** is denoted generally by the reference numeral **200**. In **FIG. 7**, the apparatus **200** consists of a cellular telephone **202** which may be any typical cellular and/or mobile telephone. Any other cellular and/or mobile communication device may also be utilized.

[0165] The cellular telephone **202** may be any of the widely used and well known cellular telephones and/or mobile communication device(s). In the embodiment of **FIG. 7**, the cellular telephone **202** serves as the transaction terminal which is described above in conjunction with the previous embodiments. As is the case with cellular telephones, the cellular telephone may transmit the authorization request and/or notice to a central processing computer. The cellular telephone **202** may, but need not, receive authorization data and/or information from the central processing computer. The cellular telephone **202** may also comprise, or have associated therewith, a keypad for the manual entry of transaction information and/or data, such as the telephone number and various command codes utilized in making or placing a telephone call.

[0166] The apparatus **200** also comprises a central processing computer **203** which services any predefined group of cellular telephones or cellular communication devices. For example, the central processing computer **203** may handle all cellular telephone accounts for a given telecommunications company and/or area. The central processing computer **203**, for example, may process and maintain records of cellular telephone calls, including billing information, for any number of cellular telephones, cellular telephone accounts, and/or cellular telephone owners which or who are serviced by a particular communications company or central processing office or computer.

[0167] The central processing computer **203** may be a mainframe computer, a mini-computer, a micro-computer, a server computer, such as those utilized in conjunction with on-line services and/or in a network environment, and/or any other suitable computer or computer system.

[0168] The central processing computer **203** may also process accounts for any of the various cellular and/or mobile communications accounts and/or devices. In the preferred embodiment, the cellular telephone **202** is linked and/or connected to the central processing computer **203** via a telecommunications system, link and/or medium (hereinafter referred to as "communications system") such as, for example, a telephone network or line. It is important to note that the communications system which is utilized may be any communications system and may include telecommunication systems, satellite communications systems, radio communication systems, digital communications systems, digital satellite communications systems, personal communications services communication systems as well as any other appropriate communications system. The cellular telephone **202** transmits signals and/or data to the central processing computer **203** as well as receives signals and/or data from the central processing computer **203**.

[0169] The apparatus **200** also comprises a cellular telephone owner communication device **204** which may receive signals and/or data from either or both of the cellular telephone **202** and/or the central processing computer **203**. In the embodiment of **FIG. 7**, the communication device **204** receives signals and data from the central processing computer **203** with said signals being transmitted via a suitable communication system. In the embodiment of **FIG. 7**, the communications system utilized for transmitting signals and/or data to the communication device **204** is a wireless telephone network or line and the communication device **204** is a wireless telephone signal receiving device such as a telephone beeper or pager. The communication device **204** or pager receives the wireless telephone signals and/or data from the central processing computer **203** during the authorization procedure as will be described in more detail below.

[0170] In the preferred embodiment, the communication device **204** is also equipped with a transmitter for transmitting signals and/or data to the central processing computer **203**. In this regard, the central processing computer **203** transmits signals and/or data to the communication device **204** as well as receives signals and/or data from the communication device **204**. The communication device **204** may also transmit signals and/or data directly to the cellular telephone **202** and receive signals and/or data directly from the cellular telephone **202**.

[0171] In the preferred embodiment, signals and/or data which are transmitted by the cellular telephone **202** are received at the central processing computer **203**. The cellular telephone **202** also receives signals and/or data from the central processing computer **203**. Further, in the alternate embodiment of **FIG. 7**, the communication device **204** receives signals and/or data from the central processing computer **203** and transmits signals and/or data to the central processing computer **203**.

[0172] As noted above, the communication device **204** is a wireless device. In this regard, the communication device **204** or pager may be carried by the cellular telephone owner and/or be kept on and/or close to the cellular telephone owner's person so that the central processing computer **203** may transmit signals and/or data to the communication device **204** so as to communicate with the cellular telephone owner at any time.

[0173] In the alternate embodiment of **FIG. 7**, the apparatus **200** also comprises a facsimile (fax) machine **205**, a personal computer **201**, a telephone **202**, a telephone answering machine **208**, an alternate telephone **209**, an alternate telephone answering machine **210**, a network computer **211**, an alternate beeper **212**, and an alternate pager **213**.

[0174] The central processing computer **203** may be linked with the above fax machine **205**, personal computer **206**, telephone **207** and associated answering machine **208**, alternate telephone **209** and associated answering machine **210**, network computer **211**, alternate beeper **212** and/or alternate pager **213**, via any suitable communication system. In the preferred embodiment, a telecommunications link or

telephone line or link, which may or may not be a wireless link depending on the device and/or the circumstances, is utilized in order to link the central processing computer **203** with each of the fax machine **205**, the personal computer **206**, the telephone **207** and associated answering machine **208**, the alternate telephone **209** and associated answering machine **210**, the network computer **211**, the alternate beeper **212**, and/or the alternate pager **213**.

[**0175**] **FIG. 8** illustrates the various components of the apparatus **200** of **FIG. 7**. In **FIG. 8**, the cellular telephone **202**, in the preferred embodiment, comprises a central processing unit or CPU **202**A, associated random access memory **202**B (RAM) and read only memory **202**C (ROM) devices, which are also connected to the CPU **202**A, a user input device **202**D, which is a typically a keypad or other suitable input device for inputting data into the cellular telephone **202** and which is also connected to the CPU **202**A, and a display device **202**E for displaying information and/or data to a user or operator.

[**0176**] The cellular telephone **202** also comprises a transmitter **202**F for transmitting signals during normal telephone operation and/or for transmitting signals and/or data to the central processing computer **203**, and/or to the communication device **204** and/or to any other device associated with the account owner or apparatus **200** if desired. The transmitter **202**F is also connected to the CPU **202**A. The cellular telephone **202** also comprises a receiver **202**G for receiving signals during normal telephone operation and/or for receiving signals and/or data from the central processing computer **203**, and from the communication device **204** and/or from any other associated device which may be utilized, if desired.

[**0177**] The receiver **202**G is also connected to the CPU **202**A. The cellular telephone **202** may also comprise a printer **202**H or other appropriate output device for outputting data to the user. The printer **202**H, if utilized, is also connected to the CPU **202**A. In the preferred embodiment, the printer **202**H prints receipts corresponding to the transaction and/or information transmitted during the telephone call or transaction.

[**0178**] In **FIG. 8**, the central processing computer **203**, in the preferred embodiment, comprises a central processing unit or CPU **203**A, associated random access memory **203**B (RAM) and read only memory **203**C (ROM) devices, which are connected to the CPU **203**A, a user input device **203**D, which is a keypad or any other suitable input device for inputting data into the central processing computer **203** and which is also connected to the CPU **203**A and a display device **203**E for displaying information and/or data to a user or operator.

[**0179**] The central processing computer **203** also comprises a transmitter(s) **203**F for transmitting signals and/or data to the cellular telephone **202** and to the communication device **204** and/or to any other device which may be utilized and/or to any one or more of the fax machine **205**, personal computer **206**, telephone **207** and associated answering machine **208**, alternate telephone **209** and associated answering machine **210**, network computer **211**, alternate beeper **212**, and/or alternate pager **213**. The transmitter(s) **203**F is also connected to the CPU **203**A. The central processing computer **203** also comprises a receiver(s) **203**G for receiving signals and/or data from the cellular telephone **202** and from the communication device **204** and/or from any other suitable device which may be utilized in conjunction with the apparatus **200**. The receiver(s) **203**G is also connected to the CPU **203**A.

[**0180**] The central processing computer **203** also comprises a database(s) **203**H which contains account information and data pertaining to the cellular telephone owner(s) and/or account(s). The database **203**H contains information about the cellular telephone owner, the telephone number, etc., and any other information and/or data necessary to the manage and/or process an account and/or account transaction as described herein. The database **203**H may also contain information regarding any limitations and/or restrictions placed on the cellular telephone and/or the use thereof. The database **203**H is also connected to the CPU **203**A. The central processing computer **203** also comprises a printer **203**I or other appropriate output device for outputting information and/or data to a user or operator.

[**0181**] In **FIG. 8**, the communication device **204**, in the preferred embodiment, comprises a central processing unit or CPU **204**A, associated random access memory **204**B (RAM) and read only memory **204**C (ROM) devices, which also connected to the CPU **204**A, a user input device **204**D, which is a keypad or a plurality of keys and/or switches for inputting data into the communication device **204** and which is also connected to the CPU **204**A, and a display device **204**E, for displaying information and/or data to the cellular telephone owner, and a database **204**F, which are also connected to the CPU **204**A.

[**0182**] The communication device **204** also comprises a receiver **204**G for receiving signals and/or data from the central processing computer **203** and which is also connected to the CPU **204**A, a transmitter **204**H for transmitting signals and/or data to the central processing computer **203** and which is also connected to the CPU **204**A. In the preferred embodiment, the communication device **204** utilized is a pager with a reply feature and/or device. A two-way pager and/or pager systems may also be utilized for implementing the respective components, and/or systems in the communication device **204**/central processing computer **203** combination and/or link.

[**0183**] The apparatus **200** of the present invention, in the preferred embodiment, may be utilized in order provide cellular telephone owner and/or account owner authorization, notification and/or security measures in transactions involving cellular telephones and/or cellular telephone numbers, and any transactions involving same in the manner described below and with reference to **FIG. 9**. In this manner, the apparatus and method of the present invention may be utilized to obtain cellular telephone owner and/or account owner authorization in a transaction involving cellular telephones and/or cellular telephone numbers.

[**0184**] **FIG. 9** illustrates the operation of the apparatus **200** of **FIG. 7** in flow diagram form. It is important to note, with regards to the apparatus **200** of **FIG. 7**, that the cellular telephone replaces the transaction terminal of the previously described embodiments. With reference to **FIG. 9**, the operation of the apparatus **200** commences at step **230** when the cellular telephone **202** is utilized to make a cellular telephone call and/or transaction.

[**0185**] The cellular telephone **202** will activate the apparatus **200**, at step **231**, with the initiation of the cellular

telephone call, and/or in any other typical manner, such as when a cellular telephone is utilized to gain access to the telephone network so that the calling connection may be established via the cellular communications network and/or the cell site. Upon the making of the cellular telephone call, at step **231**, the cellular telephone **202** will transmit data and/or information, which identifies the calling telephone, to the central processing computer which services the particular cellular telephone or cellular telephone network, so that appropriate billing and/or accounting of telephone usage may be noted and/or processed. In the preferred embodiment, the central processing computer for the particular cellular telephone and/or cellular telephone network is the central processing computer **203**. At step **232**, the central processing computer will receive and store the data and/or information which is transmitted by the cellular telephone **202**. At step **233**, the central processing computer **203** will process the data and/or information which is received from the cellular telephone **202**.

[**0186**] The central processing computer **203** may utilize any of the widely known data processing and/or software routines, which are known to those skilled in that art, in order to process transaction requests and/or authorizations involving the use of the respective cellular telephone(s) and/or cellular communication device, and/or cellular telephone number. At step **234**, the central processing computer **203** will perform a test in order to determine if the cellular telephone is lost, stolen, cancelled or de-activated. If the cellular telephone is determined to be lost, stolen, cancelled or de-activated, the central processing computer **203** will, at step **235**, block the telephone call or terminate the call if it has already been connected. The central processing computer **203** will then, at step **236**, cancel and/or de-activate the cellular telephone number or account. The central processing computer **203** will then, at step **237**, notify the cellular telephone owner that his or her cellular telephone has been cancelled and/or de-activated. The operation of the apparatus will then cease at step **238**.

[**0187**] If, at step **234**, the central processing computer **203** determines that the cellular telephone is not lost, stolen, cancelled or de-activated, the central processing computer **203** will, at step **239**, transmit a signal and/or data to the communication device **204** which is located at the cellular telephone owner. At step **240**, the communication device **204** will receive and display the data and/or information which is transmitted from the central processing computer **203**. The displayed information, in the preferred embodiment, will include the number called, the time of the call, and the duration of the call, in real-time. The information will remain displayed during the duration of the call so that the cellular telephone owner will be notified continuously throughout the duration of the call.

[**0188**] At step **241**, the central processing computer **203** will await the cellular telephone owner's reply or response. If the cellular telephone owner replies or responds, the reply or response data will also be transmitted to, and received by, the central processing computer **203** at step **241**. At step **242**, the central processing computer **203** will then determine if the cellular telephone owner's response was made within a pre-defined time period, which is chosen, in the preferred embodiment, to be one (1) minute. If at step **242**, it is determined that the cellular telephone owner did not reply or respond within the pre-defined time limit, the central processing computer will, at step **243**, increment the unauthorized transaction count (UNAUTHCT) by one (1).

[**0189**] The central processing computer **203** will then, depending upon pre-defined instructions of the cellular telephone owner, at step **244**, either allow the telephone call to continue, such as for a pre-defined duration of one (1) minute, so as to allow for cases wherein an emergency condition exists, or terminate the telephone call immediately. The decision to either allow the telephone call to continue or to terminate the telephone call can be made by the cellular telephone owner and/or by the cellular telephone service provider. Upon the completion of step **244**, the central processing computer **203** will then, at step **245**, cancel and/or de-activate the cellular telephone. Thereafter, the central processing computer **203** will, at step **246**, notify the cellular telephone owner that the cellular telephone number or account has been cancelled and/or de-activated. Upon completion of step **246**, the apparatus will cease operation at step **247**.

[**0190**] If, at step **242**, the cellular telephone owner did respond in time, the central processing computer **203** will process the reply or response data and/or information, at step **248**. The central processing computer **203** will then determine, at step **249**, if the cellular telephone call is authorized by the cellular telephone owner. If, at step **249**, the cellular telephone call is unauthorized, the central processing computer will, at step **250**, increment the unauthorized transaction count (UNAUTHCT) by one (1). The central processing computer **203** will then, at step **251**, terminate the telephone call immediately. Upon the completion of step **251**, the central processing computer **203** will then, at step **252**, cancel and/or de-activate the cellular telephone. Thereafter, the central processing computer **203** will, at step **253**, notify the cellular telephone owner that the cellular telephone has been cancelled and/or de-activated. Upon completion of step **253**, the apparatus will cease operation at step **254**.

[**0191**] If, at step **249**, the central processing computer **203** identifies the cardholder reply or response as being one to authorize the cellular telephone call, the central processing computer **203** will, at step **255**, reset the unauthorized transaction count (UNAUTHCT) to zero (0). An unauthorized transaction count (UNAUTHCT) of 0 will signify that any string of unauthorized transactions has now been broken by the cellular telephone owner. The central processing computer **203** will then, at step **256**, allow the cellular telephone call to continue uninterrupted. Upon the completion of the cellular telephone call, at step **256**, the apparatus **200** will cease operation at step **257**.

[**0192**] In instances when the cellular telephone owner is a party to the cellular telephone call and/or transaction, he or she, having the communication device **204** on his or her person, may authorize the call and/or transaction at his or her present location. If the cellular telephone owner has lent out the cellular telephone, he or she may authorize the cellular telephone call and/or transaction from his or her remote location. The cellular telephone owner may also program and/or set the communication device **204** to automatically authorize or disapprove or disallow cellular telephone calls and/or transactions with said selective authorizations being made as to time of day, calling areas, numbers called, and/or call and/or transaction duration. In this regard, the communication device **204** may be programmable so as to receive

and analyze the cellular telephone call information and/or data and reply or respond to same automatically and/or with preset or programmed replies and/or responses. The communication device **204** may also be programmable so as to limit the number of cellular telephone calls made from the cellular telephone and/or with the cellular telephone number.

[**0193**] The communication device **204**, in the preferred embodiment, is provided with a memory device for storing any number of cellular telephone calls and/or transactions so that the cellular telephone owner may review his or her account activity and/or cellular calls and/or transactions made and/or which have occurred involving his or her cellular telephone. In this manner, the cellular telephone owner may "scroll" through and/or in other ways review account activity. The communication device **204** may also be equipped to service more than one cellular telephone and/or mobile communication device(s).

[**0194**] The apparatus and method of the present invention provides for the real-time notification of cellular and/or mobile telephone usage which enables a cellular telephone owner and/or account owner to monitor, in real-time, activity involving his or her cellular telephone and/or cellular telephone number. The apparatus and method of the present invention also provides a means and a mechanism by which to inform a cellular telephone owner that the cellular telephone is lost or stolen, and/or to provide notification to the cellular telephone owner that his or her cellular telephone number is being utilized in calls and/or transactions, such as when a cellular telephone has been illegally "cloned". The cellular telephone owner may then report the cellular telephone lost or stolen and/or cancel and/or de-activate the cellular telephone number and/or account.

[**0195**] The present invention also provides a means and a mechanism by which to monitor the number of cellular or mobile telephone calls and/or transactions which are unauthorized by the cellular telephone owner and to determine whether or not to de-activate the cellular telephone and/or the cellular telephone number and/or account. In the above manner, the apparatus and method of the present invention provides an apparatus and a method to prevent and/or to drastically limit fraudulent and/or unauthorized use of, and/or the "cloning" of, cellular telephones and/or the unauthorized use of cellular telephone numbers.

[**0196**] The apparatus and method of the present invention may also be utilized in connection with an on-line service and/or on, or over, the Internet and/or the World Wide Web, so as to provide for a means by which the respective cardholder, account owner, and/or cellular telephone owner, may utilize the apparatus and method in conjunction with a home and/or a personal computer, a personal communications device, and/or a commercial or industrial computer system (i.e., an internet server computer), and/or any other appropriate device, in any appropriate network, system or medium.

[**0197**] **FIG. 10** illustrates yet another alternate embodiment of the present invention wherein the apparatus and method of any of the embodiments described herein may be utilized on, or over, an on-line service, the Internet, and/or the World Wide Web, and/or any other suitable communication network or medium. In **FIG. 10**, the apparatus, which is denoted generally by the reference numeral **300**, comprises a transaction terminal **302**, which may be a transaction terminal or a cellular telephone or communication device, depending upon the application, a server computer **350**, which is a central processing computer for processing data and/or information in an on-line, and/or Internet, and/or World Wide Web, communication environment, network, or medium.

[**0198**] The server computer **350** may be a mainframe computer, a mini-computer, a micro-computer, a server computer, such as those utilized in conjunction with on-line services and/or in a network environment, and/or any other suitable computer or computer system. The server computer **350**, in the preferred embodiment, should have associated therewith a suitable receiver(s) or transmitter(s) which may be a fax/modem and/or any other device(s) which are well known to those skilled in the art for providing communications and/or a link with a server computer in such a network environment.

[**0199**] The apparatus of **FIG. 10** also comprises a communications device **304** which may comprise a home and/or a personal computer, a laptop or a notebook computer and any one or more of the herein-described personal communications devices so that the individual may access the apparatus **300**, and in particular, the server computer **350**, at any time and from any location. Basically, the embodiment of **FIG. 10** serves to replace the central processing computer of the previously described embodiments with a server computer for utilization on, or over, an on-line service, the Internet, the World Wide Web, and/or any other suitable communications network or medium. The apparatus of **FIG. 10** operates and is utilized in the same, in similar and/or an analogous, manner as described herein in conjunction with the previously described embodiments.

[**0200**] **FIG. 11** illustrates yet another alternate embodiment of the present invention, wherein the present invention is also utilized in conjunction with an on-line service and/or on, or over, the Internet and/or the World Wide Web, and/or any other suitable communication network or medium. In **FIG. 11**, the apparatus, which is denoted generally by the reference numeral **400**, comprises a transaction terminal **402**, which may be a transaction terminal and/or a cellular telephone and/or cellular communications device, depending upon the application.

[**0201**] The apparatus of **FIG. 11** also comprises a central processing computer **403** which provides processing and/or control over the apparatus **400** in the manner described above in conjunction with the previously described embodiments. The central processing computer **403** and/or the server computer **450** may be a mainframe computer, a mini-computer, a micro-computer, a server computer, such as those utilized in conjunction with on-line services and/or in a network environment, and/or any other suitable computer or computer system.

[**0202**] The apparatus **400** of **FIG. 11** also comprises a communications device(s) **404** such as those described herein and in conjunction with the apparatus **300** of **FIG. 10**. The apparatus also comprises a server computer **450** which may either perform parallel operations and/or processing of the data and/or information which is performed and/or processed by the central processing computer **403** and/or may simply receive the data and/or information processed by the central processing computer **403**. In any event, the server computer **450** provides the means by which the data

and/or information, which is provided by the apparatus, can be accessed and or utilized via an on-line service and/or on, or over, the Internet, and/or the World Wide Web, and/or any other communications network or medium.

[0203] The server computer **450** should have associated therewith a suitable receiver(s) or transmitter(s) which may be a fax/modem and/or any other device(s) which are well known to those skilled in the art for providing communications and/or a link with a server computer in such a network environment. The apparatus of **FIG. 11** also comprises a communications device **404** which may comprise a home and/or a personal computer, a laptop or a notebook computer, and/or any one or more of the herein described personal communications devices so that the individual may access the apparatus, and in particular, the server computer **450**, at any time and from any location. The apparatus of **FIG. 11** is utilized and/or operates in the same, a similar and/or an analogous, manner as any of the embodiments described herein.

[0204] Applicant hereby incorporates by reference herein all of the methods and/or techniques for providing information and/or data over on-line service and/or on, or over, the Internet, and/or the World Wide Web, and/or any other suitable communication network or medium, along with client/server and/or Web Site technology and methods and/or techniques utilized in conjunction therewith, which are known as of the filing date of this application.

[0205] In any and/or all of the embodiments described herein, each and every one the components of the apparatus, which include, but which are not limited to, the described transaction terminals, cellular telephones and/or other cellular communications devices, central processing computers, server computers, if utilized, and any of the various communications devices, may transmit and/or receive signals and/or data, and/or be capable or transmitting and/or receiving signals and/or data, to and from any and all of the other apparatus components which may be utilized in conjunction therewith, in and for a given embodiment. In this regard, it is important to note, with respect to the embodiments of **FIGS. 10 and 11**, and any of the other embodiments described herein, that each and every component involved in the transmission and/or reception of signals, data and/or information may include an associated transmitter, receiver and/or suitable communication device.

[0206] The communication system or medium should provide for the transmission and/or for the reception of a multitude of remote electrical, electronic, electromagnetic, and/or other suitable signals, over long distances and/or in a mobile and/or a wireless communications environment. Telephone signals and telephone communication devices can be utilized in the present invention as well as personal computers and associated peripheral devices which may be utilized with telecommunications and/or other suitable communication systems and/or mediums.

[0207] The apparatus and method of the present invention may operate over any appropriate communications system, network and/or medium and/or other suitable communications systems, including radio signal, optical, satellite, digital, digital satellite, and/or other communications systems. The communications system utilized may operate anywhere in the electromagnetic and/or radio frequency spectrum. As noted above, the present invention may also be utilized in conjunction with a satellite communications system, in which case, the receivers and transmitters which are utilized in conjunction with the apparatus should be satellite communication receivers and transmitters, respectively. For example, the associated receiver(s) may be a satellite dish receiver(s).

[0208] In this regard, the cardholder, account owner or cellular telephone owner may utilize the apparatus and method of the present invention to its fullest capabilities over an on-line service and/or on, or over, the Internet, and/or the World Wide Web, and/or any other suitable communication network or medium. In this manner, the embodiment of **FIGS. 10 and 11** may allow the cardholder, account owner or cellular telephone owner to utilize the apparatus and/or to monitor the operation of the apparatus over the on-line service and/or on, or over, the Internet, and/or the World Wide Web, and/or any other communication network or medium, from any suitable computer or device, and/or from any location.

[0209] The system receiver(s) may also be utilized in conjunction with a home and/or a personal computer and/or other personal communications device(s) and/or apparatuses which may be utilized with an associated receiver or equivalent peripheral device(s). The apparatus may also be utilized in conjunction with a computer network such as an on-line service and/or on, or over, the Internet, and/or the World Wide Web, by employing any appropriate server computer and/or an associated Web Site and/or Web Site technology in conjunction with an appropriate communication medium and communication equipment.

[0210] In any of the above described embodiments, the present invention may be utilized in conjunction with any suitable communication device(s) and/or communication system(s). In this manner, the present invention may be utilized in conjunction with a telephone, a line-connected and/or a permanent telephone, a touch-tone telephone, a cordless telephone and/or a cellular or mobile telephone, a home and/or a personal computer having associated telecommunication devices or other suitable peripheral device(s), such as a modem and/or a fax/modem, and/or other suitable personal communication devices which can operate over an appropriate communications system, and/or other suitable communications systems and/or mediums, including radio signal, optical, satellite, digital, and/or other communications systems and/or mediums.

[0211] Any suitable communication system and/or medium may be utilized. Personal communication service (PCS) systems and devices, including stationary, portable and/or hand-held devices, may also be utilized. Digital signal communications devices and systems may also be utilized. Televisions, interactive and/or digital televisions, personal communication devices, personal communication services (PCS) devices, personal digital assistants, cellular telephones, display telephones, video telephones, display cellular telephones and electronically equipped watches and/or other devices and/or effects and/or accessories, may also be utilized for performing user interactive control, monitoring, authorization, notification and/or security functions in conjunction with the present invention.

[0212] It should be noted that the telephone/telephone beeper or pager system, including two-way pager systems, may be replaced with any other type of transmitter/receiver

combination, electronic or otherwise, which provides for the transmission and reception of a multitude of remote electrical, electronic, electromagnetic, and/or other suitable signals, over long distances and/or in a mobile and/or a wireless communications environment. As noted above, a personal computer system which may be adapted to such operation, or a personal communication device(s) or personal communication services (PCS) device(s) may also be utilized for, or in, any of the transmitter/receiver system combinations described herein. Two-way pagers and reply pagers may also be utilized for any, or in any, of the transmitter/receiver system combinations described herein.

[0213] The communication device(s) utilized in the present invention, as well as the associated transaction terminal and/or cellular communications device(s) and/or associated central processing computer may be personal communication services (PCS) devices and/or other suitable communications devices. A television, appropriately equipped to receive and/or to transmit signals may also be utilized. It is also envisioned that digital televisions, interactive televisions, personal communications devices, personal communications services (PCS) devices, personal digital assistants, display telephones, electronically equipped watches, cellular telephones and/or display cellular telephones may also be utilized in conjunction with the present invention.

[0214] It is also important to note that the communication device(s), in any of the embodiments described herein may be a home and/or a personal computer having associated therewith an appropriate receiver(s) and transmitter(s) such as, for example, a fax/modem.

[0215] It is important to note that the telephone/telephone beeper system, described above, may be replaced with any remote transmitter/receiver system, such as by a remote transmitter, i.e., a television-type remote control unit, which control unit would require a user interface feature and which has the capability to remotely transmit a multitude of signals over long distances to an associated receiver. A two-way pager, a reply pager, or any other appropriate two-way communication device may also be utilized. A home and/or a personal computer, with requisite peripheral devices, a personal communication device and/or a personal communication services (PCS) device may also be utilized. Digital communications devices, interactive televisions and/or digital televisions may also be utilized. It is also envisioned that digital televisions, interactive televisions, personal communications devices, personal communications services (PCS) devices, personal digital assistants, display telephones, video telephones, electronically equipped watches and/or other effects or accessories, cellular telephones, display cellular telephones, may also be utilized.

[0216] The apparatus of the present invention may be designed or programmed to telephone an owner, user, operator, occupant, or other authorized central office individual or other authorized individual, at a primary phone number, at an alternate or forwarding phone number and/or at a business phone number, send a beeper or pager message to the individual or central office and/or send a facsimile message, an electronic mail message, a voice mail message and/or an answering service message to, or for, the individual or central office. In this manner, the apparatus may report a theft and/or a malfunction situation to the interested individual(s) by utilizing multiple notification and/or reporting avenues and/or schemes so as to provide and ensure that the interested individual(s) are in fact notified as soon as possible. The multiple notification transmissions may be sequentially and/or simultaneously performed.

[0217] The apparatus and method of the present invention may also be programmable for programmed and/or automatic activation, self-activation, programmed and/or automatic operation and/or self-operation. The apparatus and method of the present invention may provide for an immediate, as well as for a deferred, control, monitoring and/or security function, and/or response thereto, so as to provide for the immediate and/or the deferred control, activation, de-activation, programming, monitoring and/or security, etc., of any one or more the herein described credit cards, charge cards, debit cards, currency or "smart" cards, banking and/or financial accounts and associated transaction cards, and/or cellular telephones and/or cellular or mobile communications devices, and/or any other suitable application in and for which the present invention may be utilized.

[0218] In any of the herein-described embodiments, the communications devices and associated transaction terminals and/or cellular communications devices and associated central processing computers, may be devices for receiving, and transmitting, respectively, radio signals, satellite communication signals, telecommunications signals, optical communication signals and/or other signals and/or those signals, including digital signals, which are utilized in conjunction with personal communication devices and/or personal communication services (PCS) devices. The devices utilized should, however, be of the same type and/or operate compatibly with the corresponding transmitters and receivers of the apparatus of the present invention.

[0219] The present invention may also be equipped with, and be utilized in conjunction with, hardware and software necessary for providing self-monitoring functions, automatic control and/or responses to occurrences, providing automatic notice of an occurrence and/or a situation to an owner, user and/or authorized individual. In this regard, any and all of the embodiments described above may comprise a monitoring device, a triggering device and/or any other suitable device for detecting an occurrence and/or a transaction which may warrant providing notice to the respective cardholder, account owner and/or cellular telephone owner. In this regard, the apparatus may provide for an appropriate signal, data and/or information transmission to the central processing computer, and/or server computer, if utilized. The signal, data and/or information may be conveyed in the form of a communication transmission, depending upon the communication medium utilized, a telephone call, a voice message, a beeper and/or a pager message, an electronic mail message, a fax transmission, and/or any other mode of communication which may be utilized in conjunction with any of the embodiments described herein.

[0220] The present invention, in any of the embodiments described herein, may be designed to be user-friendly. In this regard, the present invention may be menu-driven, and/or its operation may be menu-selected, from audio menus, visual menus, or both audio and visual menus.

[0221] While the present invention has been illustrated and described as being utilized in conjunction with providing notice and for obtaining authorizations with regard to

transactions involving credit cards, charge cards, debit cards, and/or currency or "smart" cards, banking and/or financial accounts, and/or in conjunction with cellular and/or mobile telephones, it is also envisioned that the present invention may be utilized in any similar type of transactional activity, such as purchasing and/or sale activity over an on-line service, the Internet, and/or the World Wide Web and/or in any other type of transaction wherein frequent notice and/or account holder authorization may be utilized to guard against theft and/or fraud and/or unauthorized transactions.

[0222] The apparatus of the present invention may be accessed at any time by the respective cardholder, account owner and/or cellular telephone owner and/or cellular communications device owner so as to obtain information regarding activity on his or her respective account. The respective cardholder, account owner and/or cellular telephone owner and/or cellular communications device owner may access the apparatus and, in particular, the central processing computer, and/or the server computer, if utilized, so as to obtain transaction records regarding any transaction, group or string of transactions, transactions by goods and/or service type, transactions by dollar amount, etc.

[0223] The respective cardholder, account owner, and/or cellular telephone owner and/or cellular communications device owner may also obtain, via the central processing computer, and/or the server computer, if utilized, periodic transaction records showing all transactions for a given week, which may by provided weekly, bi-weekly, monthly, yearly, and/or for any given and/or desired time period and/or interval. The apparatus and, in particular, the central processing computer, and/or the server computer, if utilized, may be designed and/or programmed so as to automatically and/or periodically provide and/or transmit any of the above-described account and/or transaction information to the respective cardholder, account owner and/or cellular telephone owner and/or cellular communications device owner, by transmitting same to the respective communications device, which may be any of the devices described herein which are utilized as the communications device.

[0224] The apparatus and, in particular, the central processing computer, and/or the server computer, if utilized, may also be designed and or programmed to transmit any of the above-described account information and/or transaction information to any one or all of the respective cardholder's, account owner's, and/or cellular telephone owner's and/or cellular communications device owner's facsimile (fax) machine, personal computer, telephone, telephone answering machine, alternate telephone, alternate telephone answering machine, network computer, and/or alternate beeper or pager. Such multiple notification transmissions, if utilized, may be performed sequentially and/or simultaneously.

[0225] The central processing computer may be linked with a fax machine, personal computer, telephone, associated answering machine, alternate telephone and associated answering machine, network computer, and/or alternate beeper or pager via any suitable communication system. The telecommunications link or telephone line or link, which may or may not be a wireless link, depending on the device and/or the circumstances, is utilized in order to link the central processing computer with each of the fax machine, the personal computer, the telephone, the associated answering machine, the alternate telephone, the alternate telephone answering machine, the network computer, and/or the alternate beeper or pager.

[0226] In any of the herein-described and/or envisioned embodiments, the respective central processing computer which is utilized may comprise a plurality of computers and/or computer systems. Further, the respective central processing computer may be the processing computer for processing account information, and/or for servicing, and/or monitoring, the respective account(s) activity, and/or the central processing computer may be a separate and/or distinct computer or computer system which is associated with and/or linked with the processing computer.

[0227] In any of the herein-described and/or envisioned embodiments, the respective communication device which may be utilized may operate independently of, and/or in conjunction with, a central service and/or a communications service. For example, a beeper or pager may be utilized in conjunction with a corresponding beeper or pager communications service, which communications service may serve to relay signals, data and/or information, to, and from, the beeper or pager, whichever the case may be. The communication device which may be utilized may also be capable of transmitting signals, data and/or information, directly to, and receiving signals, data and/or information, directly from, a component(s) of the apparatus, without the need for a central service and/or a communications service and/or a relay system.

[0228] It is also envisioned that the apparatus and method of the present invention may provide for transmitting signals, data and/or information to the cardholder, account owner and/or cellular telephone owner via transmissions made to, and received at a television, radio, car radio, computer and/or other communication device which receives signals transmitted via any suitable communication system. In this manner, for example, a cardholder, account owner and/or cellular telephone owner may be notified by having signals, data and/or information transmitted to their television, radio, car radio, computer, etc., in such a manner so as to interrupt the normal operation of same, so as to convey the information and/or message to the cardholder, account owner and/or cellular telephone owner, in real-time and/or upon the occurrence of the event triggering or giving rise to same.

[0229] In any and/or all of the above described embodiments, the apparatus may be programmed and/or be programmable by the respective cardholder, account owner and/or cellular telephone owner or cellular device owner, for his or her account. In conjunction with the use of credit cards, charge cards, debit cards, the cardholder may program the central processing computer, and/or the server computer, if utilized, so as to change the credit limits on his or her account, periodically and/or at any desired time. For example, a cardholder having a credit card with a $10,000.00 dollar credit limit, but who very seldom utilizes his or her card for much more than $500.00 dollars during a monthly billing period, may program the apparatus and, in particular, the central processing computer, or server computer, if utilized, so as to temporarily reduce his or her credit limit.

[0230] If the cardholder should then desire to make a major purchase with his or her credit card of, for example,

a purchase in the amount of $8500.00, the cardholder may, prior to the transaction, reprogram the central processing computer and/or server computer, if utilized, so as to temporarily increase his or her temporary credit limit. The apparatus may then be programmed so that, after the major purchase has been made, the apparatus may revert operation back to the reduced credit limit.

[0231] The cardholder may program the central processing computer, and/or the server computer, if utilized, via the communication device, which may be any one or more of the devices described herein. The cardholder may also perform the above-described programming via a touch-tone telephone. In the same manner, the cardholder may program the apparatus so as to limit the types of transactions involving, and/or the goods and/or services which may be purchased with, his or her card, and/or the stores and/or service providers which may be authorized to accept the card, limits on the dollar amounts of transactions pertaining to each authorized vendor, seller and/or service provider, daily spending limits, the vendors, sellers, and/or service providers with which the card may be utilized, the geographical area or location within which the card may be utilized, and/or authorized times for card usage (i.e. specific days, dates, times of day, times of month, year, etc.), and/or any other limitations and/or restrictions regarding amount of transaction, parties involved, geographical area, and or times of allowed usage. In a similar manner, the cardholder may similarly program the apparatus as described above in conjunction with use of any of the herein-described cards.

[0232] In a similar manner, a cardholder of a currency and/or "smart" card may program the apparatus so as to limit the types of transactions involving, and/or the goods and/or services which may be purchased with, his or her card, and/or the stores or service providers which may be authorized to accept the card, limits on the dollar amounts of transactions pertaining to each authorized vendor, seller and/or service provider, daily spending limits, the vendors, sellers, and/or service providers with which the card may be utilized, the geographical area or location within which the card may be utilized, and/or authorized times for card usage (i.e. specific days, dates, times of day, times of month, year, etc.), and/or any other limitations and/or restrictions regarding amount of transaction, parties involved, geographical area, and or times of allowed usage.

[0233] In the case of savings accounts, checking accounts, and/or automated teller machine accounts, the account owner may program the apparatus and, in particular, the central processing computer, and/or the server computer, if utilized, so as to limit the amount of any one transaction or transactions, individuals who may make the transactions, proof of identity of which the types of proof may be specified, specific banks and/or financial institutions authorized to accept and/or perform transactions for the account, geographical areas and/or location within which banks and/or financial institutions may be authorized to accept and/or perform transactions with the account, specific times of day, specific days, dates and/or time of the month in, or on, which transactions may be authorized, limits of charge-backs, returned item amount withdrawals, maintenance and/or other fee charge withdrawals, etc. and/or authorized times for account usage (i.e. specific days, dates, times of day, times of month, year, etc.), and/or any other limitations and/or restrictions regarding amount of transaction, parties involved, geographical area, and or times of allowed usage.

[0234] With regards to automated teller machine accounts, it is also possible to specify and programmably change personal identification numbers and/or any other access code(s) and provide for various personal identification numbers and/or access codes for different locations, different automated teller machines, different days, different times and/or different transaction amounts.

[0235] In the cases of cellular telephones and/or cellular communications devices, the cellular telephone owner and/or cellular communication device owner may program the apparatus and, in particular, the central processing computer, and/or the server computer, if utilized, so as to limit the phone numbers which may be called, and/or the numbers from which incoming calls may be accepted and/or received, the geographical areas and/or locations which may be called and/or accessed or from which calls may be received, the times of day, specific days, dates, times of month or year, during which the cellular telephone and/or cellular communication device may be utilized, specific phone numbers which may be called, specific time durations for a phone call and/or any authorized times for cellular telephone and/or cellular communication device usage (i.e. specific days, dates, times of day, times of month, year, etc.), and/or any other limitations and/or restrictions, regarding amount of transaction, parties involved, geographical area, and or times of allowed usage.

[0236] The present invention may also be utilized so as to provide financial transaction and/or wireless communication device authorization, notification and/or security for any number and/or types of accounts, including credit card accounts, charge card accounts, debit card accounts, currency or "smart" card accounts, and/or other transaction card accounts, savings accounts, checking accounts, automated teller machine accounts, cellular telephone accounts and/or cellular communication device accounts. In this manner, the apparatus may comprise a communication device or communications devices which may receive and/or transmit signals, data and/or information, for any number and/or types of the above accounts, and/or for each of the respective accounts utilized, from and to the respective central processing computer and/or central processing computers for the respective accounts. In this manner, an individual may utilize a single communication device so as to monitor all of his or her accounts and/or types of accounts.

[0237] The apparatus and method of the present invention provides for the real-time notification of financial transactions involving credit cards, charge cards, debit cards, and/or currency or "smart" cards, which enables a cardholder to monitor, in real-time, activity involving his or her card(s) and the corresponding accounts. The apparatus and method of the present invention also provides a means and a mechanism by which to inform a cardholder that his or her card(s) are lost, stolen, or is being utilized in an unauthorized manner and provides an indication to the cardholder of when and where his or her card(s) is being utilized in transactions. The cardholder may then report the card lost or stolen and/or cancel and/or de-activate the card. The apparatus and method of the present invention provides the same, and/or analogous, features and/or functions for banking and/or financial accounts and/or for cellular telephone accounts.

[0238] While the communications device(s) described above are described, in each of the respective embodiments, as being utilized for specific uses (i.e. credit and other cards transactions, banking and/or financial transactions, and/or cellular telephone transactions, the communication device(s) may also be adapted and/or programmed for use in all of these aforementioned transactions so that an individual may utilize a single communication device for all of the above described and/or envisioned transaction types.

[0239] It is envisioned that the apparatus and method of the present invention may be utilized in conjunction with other apparatuses and methods in the prior art, and that the present invention may be incorporated with these known apparatuses and methods so as to improve upon them and so as to find additional applications for the present invention.

[0240] Applicant hereby incorporates by reference herein the following U.S. Pat. No. 5,173,594 which teaches a system for printing personalized charge-card service receipts at remote locations; U.S. Pat. No. 5,479,510 which teaches an automated data card payment verification method; U.S. Pat. No. 5,473,667 which teaches a paging system with third party authorization; U.S. Pat. No. 3,723,655 which teaches a credit authorization terminal; U.S. Pat. No. 5,485,510 which teaches a secure credit/debit card authorization; U.S. Pat. No. 5,406,619 which teaches a universal authentication device for use over telephone lines; U.S. Pat. No. 5,444,616 which teaches financial transaction systems and methods utilizing a multi-reader transaction terminal; U.S. Pat. No. 5,513,250 which teaches telephone based credit card protection; U.S. Pat. No. 4,485,300 which teaches a loss control system; U.S. Pat. No. 4,758,714 which teaches a point-of-sale mechanism; U.S. Pat. No. 4,947,027 which teaches a system for identifying authorized use of credit cards; U.S. Pat. No. 5,357,563 which teaches a data card terminal for receiving authorizations from remote locations; U.S. Pat. No. 5,444,763 which teaches a translation and connection device for radio frequency point of sale transaction system; U.S. Pat. No. 5,243,645 which teaches an automatic system for forwarding of calls; and U.S. Pat. No. 3,938,090 which teaches a terminal apparatus.

[0241] While the present invention has been described and illustrated in various preferred and alternate embodiments, such descriptions are merely illustrative of the present invention and are not to be construed to be limitations thereof. In this regard, the present invention encompasses any and all modifications, variations and/or alternate embodiments with the scope of the present invention being limited only by the claims which follow.

1-20. (canceled)

21. A transaction security apparatus, comprising:

a receiver, wherein the receiver receives a limitation or restriction on an account usage, wherein the limitation or restriction on an account usage is received in real-time from a communication device associated with an individual account holder;

a memory device for storing the limitation or restriction on an account usage; and

a processing device for processing a transaction on an account or an authorization request in conjunction with the limitation or restriction on an account usage,

wherein the processing device generates a first signal, wherein the first signal contains information for authorizing or disallowing the transaction.

22. The apparatus of claim 21, wherein the account is at least one of a credit card account, a charge card account, a debit card account, a currency card account, and a "smart" card account.

23. The apparatus of claim 21, wherein the account is at least one of a bank account, a savings account, a checking account, and an automated teller machine account.

24. The apparatus of claim 21, wherein the account is at least one of a cellular telephone account and a cellular communication device account.

25. The apparatus of claim 21, wherein the communication device is a wireless device.

26. The apparatus of claim 21, wherein the receiver receives a transaction authorization request.

27. The apparatus of claim 21, further comprising:

a transmitter for transmitting a notification signal to the communication device or to a second communication device associated with the account holder in response to the transaction on an account or an authorization request.

28. The apparatus of claim 21, wherein the communication device is a home computer or personal computer.

29. The apparatus of claim 21, wherein the communication device is an interactive television.

30. The apparatus of claim 27, wherein the communication device or the second communication device is at least one of a cellular telephone, a wireless telephone, a mobile telephone, and a personal digital assistant.

31. The apparatus of claim 27, wherein the communication device or the second communication device is a home computer or personal computer.

32. The apparatus of claim 27, wherein the communication device or the second communication device is an interactive television.

33. The apparatus of claim 21, wherein said authorization request is input via or transmitted from at least one of a point-of-sale device, a transaction device, a cellular telephone, and a cellular communication device.

34. The apparatus of claim 21, wherein the limitation or restriction is transmitted to the receiver on or over at least one of the Internet and the World Wide Web.

35. The apparatus of claim 21, wherein the processing device counts a number of unauthorized transactions which occur on an account.

36. The apparatus of claim 27, wherein the notification signal contains information regarding at least one of a transaction type, a transaction amount, a location of transaction, a time of transaction, and at least one of good and a service involved in the transaction.

37. A transaction security apparatus, comprising:

a processing device, wherein the processing device processes information regarding a transaction involving at least one of a credit card, a charge card, a bank account, a checking account, a savings account transaction, and a automated teller machine account, wherein the processing device is capable of allowing or disallowing the transaction, and further wherein the processing device generates a signal containing information regarding the transaction; and

a transmitter, wherein the transmitter transmits the signal to a communication device associated with an individual account holder, wherein the signal is transmitted to the communication device in real-time, and further wherein the signal is transmitted on or over at least one of the Internet and the World Wide Web.

38. The apparatus of claim 37, wherein the communication device is at least one of a beeper, a pager, a telephone, a two-way pager, a reply pager, a home computer, a personal computer, a personal communication device, a personal communication services device, a television, an interactive television, a digital television, a personal digital assistant, a display telephone, a video telephone, a watch, a cellular telephone, a wireless telephone, a mobile telephone, a display cellular telephone, and a facsimile machine.

39. The apparatus of claim 38, further comprising:

a receiver, wherein the receiver receives a second signal from the communication device, wherein the second signal contains information for allowing or disallowing the transaction.

40. A transaction security method, comprising:

receiving a limitation or restriction on an account usage, wherein the limitation or restriction is received in real-time from a communication device associated with an individual account holder, wherein the limitation or restriction is transmitted on or over at least one of the Internet and the World Wide Web;

storing the limitation or restriction on an account usage;

processing at least one of a transaction on an account and an authorization request in conjunction with the limitation or restriction on an account usage, wherein the transaction on the account or the authorization request is processed with a processing device; and

generating a signal containing information for authorizing or disallowing the transaction.

* * * * *