United States Patent [19]

Horton

[11] **3,738,547**

[45] **June 12, 1973**

[54] **GLOVE TURNING MACHINE**

[75] Inventor: **Travis Horton,** Kewanee, Ill.

[73] Assignee: **Boss Manufacturing Company,** Kewanee, Ill.

[22] Filed: **Feb. 12, 1972**

[21] Appl. No.: **243,236**

[52] **U.S. Cl.** **223/40**

[51] **Int. Cl.** **A41b 43/00**

[58] **Field of Search** 223/39-43, 57, 78

[56] **References Cited**

UNITED STATES PATENTS

1,348,077 7/1920 Baum 223/40

3,656,669 4/1972 Conklin et al. 223/40

Primary Examiner—George V. Larkin

Attorney—Robert C. Brown, Jr., Thomas F. McWilliams, John M. Mann et al.

[57] **ABSTRACT**

A semi-automatic machine to turn leather gloves or leather palm gloves right side out after sewing with the inner side out, which fully turns the leather finger tips fully and properly every time and which performs the turning operation completely and rapidly and avoids the necessity for specially poking the fingers out one finger at a time.

11 Claims, 8 Drawing Figures

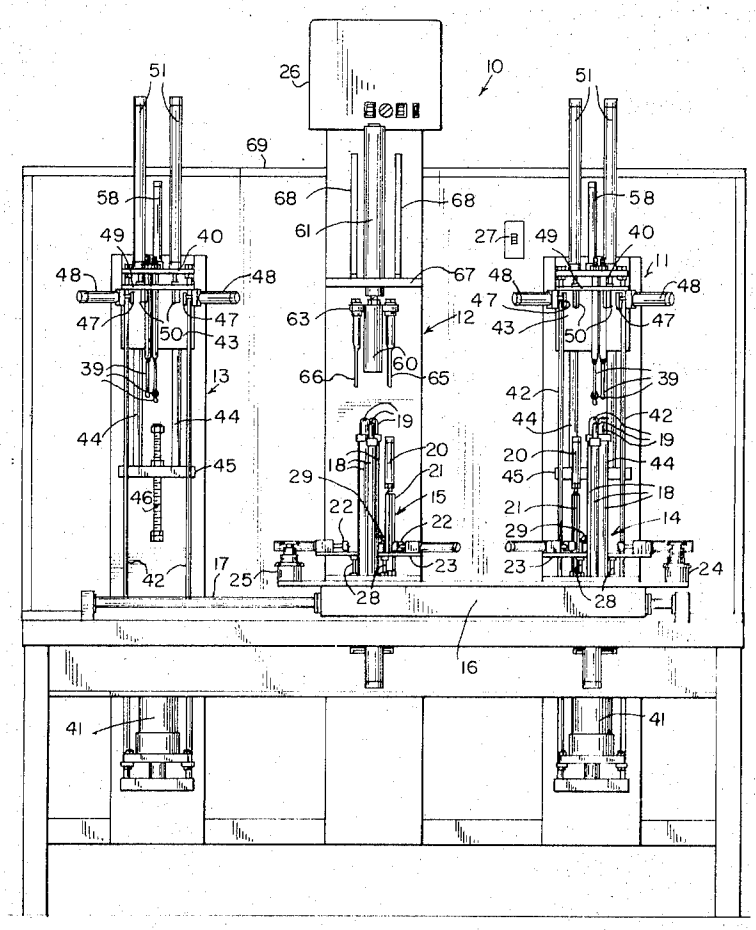

FIG. 1

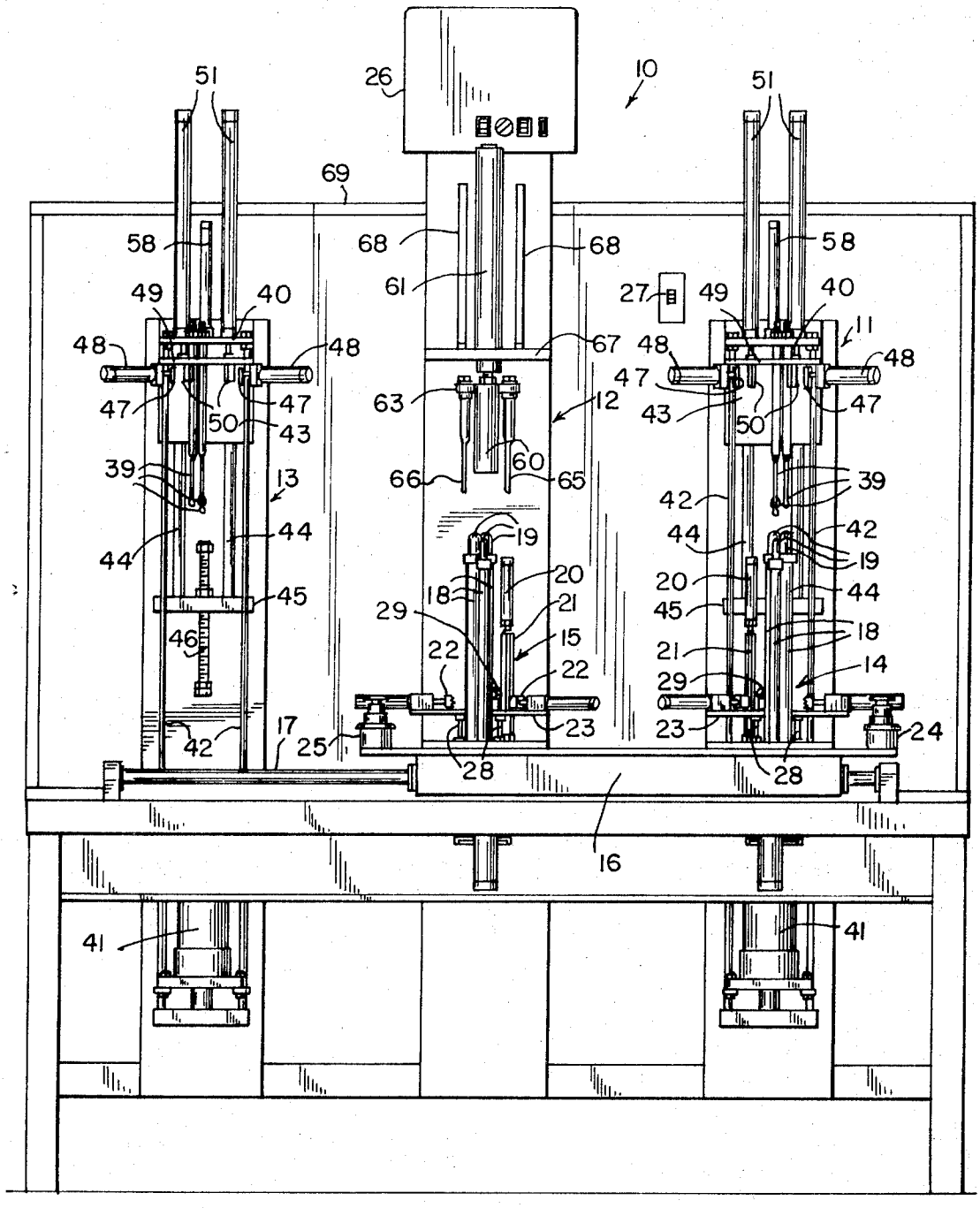
10
11
12
13
14
15
16
17
18
19
20
21
22
23
24
25
26
27
28
29
39
40
41
42
43
44
45
46
47
48
49
50
51
58
60
61
63
65
66
67
68
69

FIG. 2.

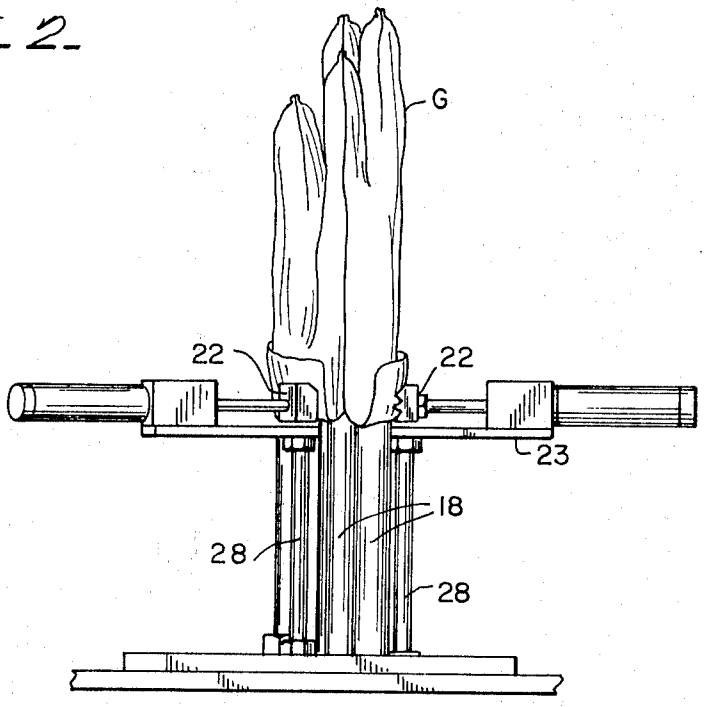

FIG. 3.

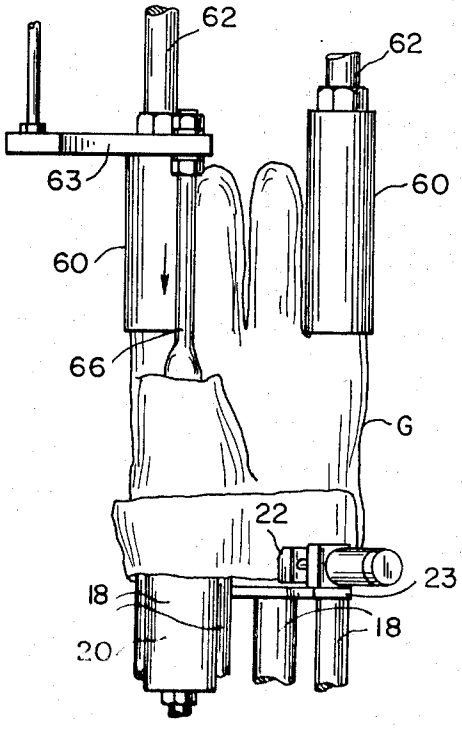

FIG. 4.

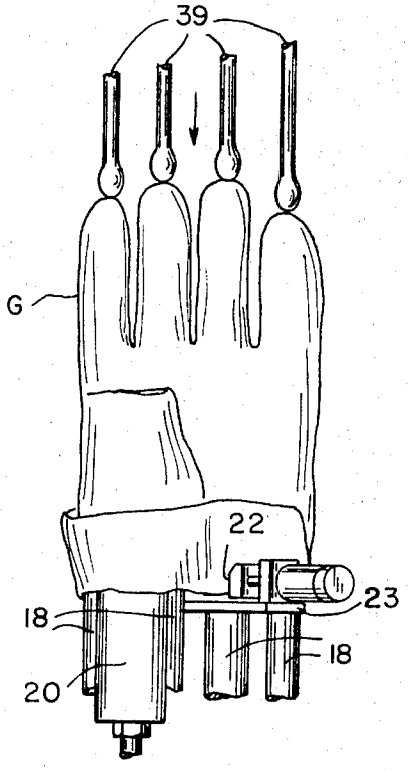

FIG. 8

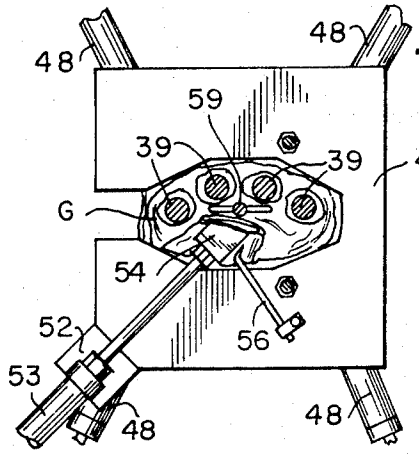

FIG. 5

FIG. 6

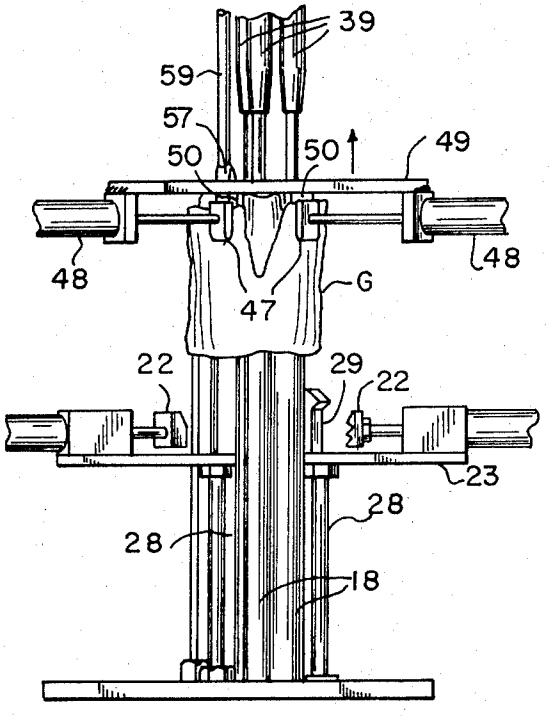

FIG. 7

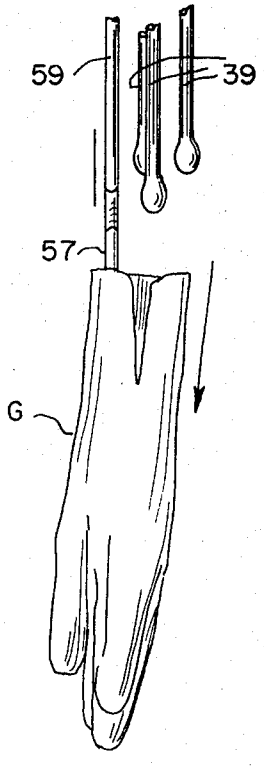

GLOVE TURNING MACHINE

BACKGROUND OF THE INVENTION

This invention is in an art where previous glove turning apparatus have largely utilized air pressure, either positive or negative, for inverting the gloves after the sewing operation and these air pressure devices mostly were used in combination with molds taking the form of the completed article and usually required additional mechanism for completing the turning operation initiated by the air pressure device. Complicated valving for controlling such devices or developing the negative pressure or vacuum condition necessitated servicing operations which increased the maintenance costs required to keep the apparatus functioning for normal manufacturing operations.

OBJECTS OF THE INVENTION

It is a primary object of the invention to provide a semi-automatic machine for turning gloves that will handle leather of variable thickness and considerable variation as to stiffness and which turns every glove completely every time.

An important object of the invention is the provision of a glove turning machine which turns the thumb portion of each glove and gets the bulkiness of this portion out of the way to facilitate the completion of the remaining turning operations on the balance of the glove.

The principal object of the invention is the provision of a semi-automatic glove turning machine having three operating stations with thumb turning and hacking apparatus at the middle station and finger turning apparatus at the two end stations and a reciprocating table having two operating stations with similar apparatus at both stations for coooperation with the apparatus at the three stations on the machine when the table is moved alternately between two opposite positions where its two stations are aligned with two of the three stations on the machine in each position.

SUMMARY OF THE INVENTION

A glove turning apparatus is provided by this invention wherein a multi-station machine affords mechanism for rapidly and completely turning finished gloves right side out after they have been manufactured and sewn with the seams on the outside so that the rough side and the seams are effectively placed at the inner side. The machine totally inverts the thumb and every finger of every glove every time and completes the turning operation rapidly without damage to the glove while the tips or ends are properly inverted in every instance. Initial stripping and turning of the thumb whereby this ordinarily stiff portion is pushed out of the way of subsequent operations before the balance of the glove is turned enables the machine to handle gloves made from leathers of varying thickness and varying over a wide range in respect to stiffness.

DESCRIPTION OF THE DRAWINGS

The foregoing and other and more specific objects of the invention are attained by the apparatus and arrangement illustrated in the accompanying drawings.

FIG. 1 is a general front elevational view of the glove turning machine showing the three operating positions;

FIG. 2 is a detail view, to larger scale, showing a glove mounted on the turning tubes and secured by bottom cuff clamps;

FIG. 3 also is a detail view of the glove secured in position and illustrating the initial thumb turning operation by a descending thumb turning rod;

FIG. 4 is a detail view also showing the glove secured in position with the thumb turned and the finger turning rods in position to descend and turn the four fingers of the glove;

FIG. 5 is a detail view of the glove still secured in position with the top cuff clamps in position to take over from the bottom cuff clamps and showing the air cylinder actuated plunger pushing the turned thumb portion out of the way and the finger portions turned by the descending finger turning rods;

FIG. 6 is a detail view showing the completion of the glove turning operations with the top cuff clamp mechanism moving upwardly;

FIG. 7 is a final detail view showing the completely turned glove being disengaged from the finger turning rods by an air cylinder actuated push rod whereby the glove drops into a container; and

FIG. 8 is a plan view showing the arcuate arrangement of the glove turning elements which has the effect of providing a hollow center area to receive the pushed out of the way thumb portion.

DESCRIPTION OF PREFERRED EMBODIMENT

In the drawings, **10** designates generally a machine constructed in accordance with this invention wherein, as best shown in FIG. **1**, three operating positions are provided at **11, 12,** and **13** which are positioned for cooperative relation with two operating stations **14** and **15** on a reciprocating table **16.** The operating stations **14** and **15** are shifted between a position of the table **16** where they cooperate respectively with the fixed operating positions **11** and **12** and a position of the table **16** where the stations **14** and **15** cooperate respectively with the fixed operating positions **12** and **13.**

The reciprocating table **16** is mounted on ways **17** by menas of ball type bushings which provide for smooth, easy movement of the table between the central hacking position **12** and the respective turning positions **11** and **13** at the opposite sides of the machine. Each of the operating stations **14** and **15** on the sliding table **16** includes four vertically disposed finger tubes **18** which are disposed in an arcuate pattern or arrangement on the table **16.** These tubes **18** for the first, second and third fingers of a glove G are made from seven-eighths inch outside diameter tubing having an inside diameter of three-fourths inch but the tube for the fourth or "little" finger is made from tubing of three-fourths inch outside diameter having an inside diameter of five-eighths inch. The arrangement of the upstanding tubes **18** is such that the glove G may be slipped over them easily. These tubes have retractable plungers **19** mounted therein made of Teflon having rounded end portions to facilitate sliding the leather glove over them.

The retractable plungers are spring pressed by means of springs disposed within the tubes **18** and mounted in a suitable manner. A turning tube **20** for the thumb of the glove is mounted on an air cylinder **21** which in turn is mounted on the table **16** in such manner that the cylinder does not rotate relative to the table. The air cylinder **21** enables the thumb turning tube **20** to be de-

pressed during the operation of turning the thumb portion and allows the tube **20** to be recessed completely prior to turning the glove right side out. The arcuate arrangement of the turning tubes **18** and **20** at the left hand end of the table **16**, as seen in FIG. **1**. are disposed for the reception of a left hand glove while the tubes **18** and **20** at the right hand end of the table, as seen in this figure are disposed to receive a right hand glove. At the left hand position on the sliding table **16**, bottom cuff clamps **22** are disposed to engage the cuff portions of the glove. Similar clamps **22** are disposed at the right hand position.

The bottom cuff clamps **22** grip the cuff of the glove G against back-up members **29**. These operating clamp assemblies at each position are mounted on a plate **23** and are actuated first to rise, then engage the cuff portions of the glove against the members **29** and finally to move downward thereby exerting a downward force on the glove. This holds the ends of the glove fingers tightly against the rounded ends of the spring loaded Teflon plungers **19** until the fingers are turned. The plate **23** supporting the bottom cuff clamp assemblies is actuated vertically in its raising and lowering movements to stretch the glove fingers over the Teflon plungers **19** by means of cylinder mechanism **28.**

The glove turning machine in operation is programmed to operate in cycles involving the several steps of turning the various glove portions in proper sequence and the operation of the programmer is initiated from the table **16** by means of a palm switch **24** when a right hand glove is placed on the turning tubes **18** at station **14** and initiated by palm switch **25** when a left hand glove is placed on the turning tubes at station **15.** The sequence programmer is illustrated in FIG. **1** at **26.** The main power supply for the glove turning machine is controlled by means of an on-off switch **27** conveniently located on the front panel of the machine as seen in FIG. **1.**

The right and left positions **11** and **13** of the glove turning machine as well as the control position **12** are fixed positions. The positions **11** and **13** each contain similar glove turning apparatus but disposed respectively for the reception of right hand gloves on the former and left hand gloves on the latter for cooperation with the respective right hand station **14** on the table. The apparatus at the fixed positions **11** and **13** includes glove finger turning rods **39** arranged respectively in right hand and left hand patterns for cooperation with the corresponding finger turning tubes and plungers **18** – **19** on the sliding table **16** at the right hand and left hand stations **14** and **15.**

The turning rods **39** at both positions are mounted on a plate **40** and this plate at each position is connected to an actuating cylinder **41** by means of vertical rods **42** so that this actuating cylinder moves the turning rods up and down in the operations of turning the glove fingers. The mounting plate **40** for the turning rods **39** at each position **11** and **13** is secured to a vertically sliding block **43** which moves up and down on a pair of hardened rods **44** at the respective positions. The sliding blocks **43** contain ball type bushings which run on the hardened rods **44** and make for smooth, easy operation.

It is necessary to limit the extent of the penetration of the finger turning rods **39** into the finger turning tubes **18** against the retractable plungers **19.** For this purpose the hardened rods **44** at their lower end are secured to a limit plate **45** which acts as a stop to downward movement of the sliding block **43** when it is actuated downwardly by the cylinder **41** through the connection afforded by the rods **42** and the plate **40** secured to the block **43.** The extent of penetration is adjustable vertitically by means of adjustment screw **46** so that it is thus possible to control the downward movement of the sliding block **43** and thus the extent of penetration of the finger turning rods **39** into the finger turning tubes **19** by locating the adjustment screw **46** at a position in accordance with the degree of penetration desired for the rods **39** into the tubes **19.**

Top cuff clamps **47** also provided at positions **11** and **13** which grip the cuff portion of each glove after the finger portions have been turned and pulled in an upwardly direction to turn the glove right side out. The top cuff clamps **47** together with their actuating cylinders **48** are mounted on a supporting plate **49** and depending clamping plates **50** are also mounted on this supporting plate. The top cuff clamps **47** grip the cuff portion of the glove against these clamping plates to pull the cuff in an upward direction during the operation of turning the glove right side out. The supporting plate **49** at each position **11** and **13** is moved upwardly and downwardly by a pair of cylinders **51** operatively connected to the supporting plate through the mechanism of their piston rods as shown in FIG. **1.**

Also mounted on the supporting plate **49** is the mechanism for pushing the thumb portion of the glove, after it has been turned out of the way of subsequent glove turning operations. A laterally extending portion **52,** best shown in FIG. **5,** on the supporting plate **49** mounts the operating cylinder **53** for the thumb pusher **54** which is secured on the end of the cylinder push rod **55.** This air cylinder **53** extends after the thumb has been turned and pushes the thumb portion of the glove into the hollow of the arc formed by the arrangement of the finger turning tubes and rods **18** and **39** in an arcuate pattern thus creating the open area into which the thumb portion is pushed. This operation moves the bulkiness of the thumb portion out of the way and makes for much easier turning operations on the glove and subsequent stripping of the glove from the apparatus.

Getting the bulky thumb portion out of the way is especially beneficial when working with gloves made from the thicker and stiffer leathers that frequently are encountered in the manufacture of gloves of the type made on apparatus of the kind disclosed herein. A retaining rod **56** pivotally mounted on the supporting plate **49** to engage the thumb portion of the glove as the cylinder **53** extends, may be utilized to hold the thumb portion in its out-of-the-way position.

A stripper mechanism is also carried by the supporting plate **49** for removing the glove from the apparatus after the various turning operations have been completed. A stripper member **57** is adapted to engage the glove and push it downwardly off of the glove turning fingers **39** where it has last been placed by the upward action of the top cuff clamps **47.** The stripper **57** is mounted on the piston rod **59** of a vertically disposed cylinder **58** which actuates the stripper downwardly to knock the glove off of the turning fingers into a receptacle below the apparatus and retracts it upwardly into a position for subsequent stripping operations. The stripper member **57** is best shown in FIG. **5** and the actuating cylinder **58** is best illustrated in FIG. **1.**

The central position **12** of the glove turning machine includes apparatus for hacking the glove onto the spring loaded plungers **19** to effect and insure tight engagement thereon and also includes the thumb turning devices which perform the initial turning operation on the glove. The hacking devices comprise a pair of cylindrical tubes **60** which are adapted to engage over the first and fourth finger portions of the glove and move downwardly to stretch these portions of the glove over the spring loaded plunger and effect a tight engagement of the crotch portions of the glove between the first and second finger portions and between the third and fourth finger portions while pulling the end portions of the glove fingers tightly against the rounded ends of the spring loaded plungers **18.** The bottom cuff clamps grip the cuff and pull down to hold the end portions of the glove tightly against the plungers until the finger turning rods **39** come in contact with them. This is essential in getting the ends of the fingers to turn completely every time. The hacker tubes **60** are actuated by a vertically disposed cylinder **61** with each tube **60** mounted on the lower end of the respective piston rods **62** of the cylinders.

The thumb turning rods are mounted on a plate **63** which is moved up and down, as best shown in FIG. **3** by one of the two cylinders **61** for the hackers **60** and to which the plate **63** is operatively connected through its piston rod **62** whereby the plate and the attached thumb turning rods are actuated vertically and simultaneously with the hackers **60.** The thumb turning rods comprise a right thumb turning member **65** and a left thumb turning member **66** both depending from the plate **63.** These thumb turning rods enter the thumb portion of the respective gloves and turn the thumb while the glove is being hacked on the Teflon plungers **19** by the hacking tubes **60.** The cylinders **61** for operating the hackers **60** and the actuation of the thumb rod supporting plate **63** are both mounted on a fixed plate **67** which is reinforced and braced by gusset members **68.** The apparatus at the three positions **11, 12,** and **13** is mounted on a cabinet structure **69** which houses all of the air valves, piping and connections for the various operating cylinders actuating the various devices.

OPERATION

In the operation of this glove turning apparatus the operator places the glove to be turned on the forms at the two stations on the reciprocating table **16** turning up the cuff portions, which are gripped by the bottom cuff clamps **22.** The gloves are each hacked and the thumbs turned at the central position **12.** The thumb tube **20** is retracted prior to actuation of the thumb pusher **54.** The bottom cuff clamps release as the fingers of the glove are turned at the respective side positions **11** and **13,** after the turned thumb portion has been pushed out of the way by the thumb pusher **54,** the retainer **56** holding the thumb portion out of the way during the finger turning operation. The top cuff clamps **47** engage the cuffs and grip them against the backing plates **50** and pull them upwardly to complete the inversion of the glove on the finger rods **39.** The top cuff clamps release and the completely turned glove now right side out, is knocked off of the finger rods **39** by the downward movement of the stripper member **57** whereupon the glove drops into a receptacle provided therefor below the turning apparatus. FIGS. **2** through **7** consecutively show the sequence of operations in the various steps of turning the glove G right side out.

GENERAL SUMMARY OF OPERATION

The glove manufacturing industry has never had a machine that will turn leather gloves and successfully turn out the ends of the four leather fingers and thumb every time and then invert the glove and handle leather palm gloves with safety cuffs automatically. The industry has had machines that would satisfactorily turn some types of cloth gloves but none of them has ever been able to turn leather palms with safety cuffs. The present machine accomplishes the above functions by using a seven-step, two-position operation as summarized hereinafter.

The first step involves a left-hand glove which is put over the left female tubes **18.** Hackers **60** and thumb turning rods **65** and **66** move down and turn the thumb and apply approximately 120 pounds of pressure between the first and second fingers and between the third and fourth fingers. This pulls the ends of the fingers over the plunger **19** while three bottom cuff clamps **22** come up and grip the cuff and pull downward and hold the glove tight against the plungers **19.** The hackers are then released but the downward pull is maintained until released later in the cycle.

The second step is initiated before the hackers are released. The female thumb tube **20** is dropped down and turns the thumb and the bulkiness of the thumb is gotten out of the way. This reduces the resistance in turning the balance of the glove later and removes a great deal of the possibility of tearing the safety cuff. The hackers **60** are then removed.

In step three, the table **16** carrying the right and left hand female finger and thumb tubes move to the left and the four turning rods **39** come down against the finger tips while the tension is still applied to the cuff to insure that the leather tips of the fingers will begin being inverted at the stitching seam. The cuff clamps then release and the entire length of the fingers are pushed inside the female tubes **18.** While the above is happening, the top clamps **47** come down and get in position to grip the cuff.

At the fourth step, in order to divide and thereby further reduce the tension on the cuff during the turning and stripping of the glove, the cuffs are gripped in four places and the stripping of the glove up over the male turning rods out of the female tubes **18** are timed so that the glove is stripped or pulled up over itself just before the rods leave these female tubes. The tubes **18,** as shown, are approximately seventh-eighths inch in diameter while the turning rods are three-eighths inch in diameter. This makes it much easier to pull the glove up over a series of three-eighths inch diameter rods than over a series of seventh-eighths inch diameter tubes. The result is that there is less chance of damaging the safety cuff during the stripping operation.

At step five the left-hand glove is on the male turning rods **39** and the operations of step one for the right-hand glove are repeated and completed and the table moves to the right into position one.

During step **6,** while steps two, three and four are being performed by the machine on the left-hand glove and the operator is putting the left-hand glove over the left female tubes **18,** the turning rods being operated by three individual air cylinders, are now being extended

so that the first, second and third fingers are fully turned right side out.

The safety cuff clamps are released at step seven and another air cylinder is extended that actuates the stripper **57** and pushes theglove off the turning rods and into a box below.

Steps one through seven on the right-hand glove are identical to the steps for the left-hand glove.

From the foregoing it will be seen that a glove turning apparatus has been provided that will turn the finger tips of leather gloves right side out with the ends of the fingers turned out completely every time and while other glove turning machines may be available it has not been possible heretofore to turn the end of the fingers out properly every time and with sufficient speed which necessitated poking the fingers manually for complete results. The present machine overcomes the difficulty and affords a means of rapidly and efficiently turning the gloves completely and which is capable of handling gloves of variable thickness or stiffness and of leather or other materials or combinations of materials and which turns every glove completely every time.

What is claimed is:

1. A semi-automatic glove turning machine having three operating stations comprising a middle station and two end stations disposed respectively at opposite sides of the middle station, said middle station having a pair of thumb turning rods and said end stations ends having a plurality of finger turning rods, a reciprocating table having two operating stations movable between two opposite positions to dispose its said two operating stations alternately in cooperative relationship to said middle station and one of said end stations, said two stations on said reciprocating table each having a thumb turning tube and a plurality of finger turning tubes disposed respectively for cooperative relationship with one of said thumb turning rods at said middle station and with said finger turning rods at each end station in the respectively alternate positions of said table, a spring loaded end plunger on each of said finger turning tubes, means at said middle station to stretch the finger portions of a glove over said plungers, means to actuate said thumb turning rods and said means to stretch the finger portions simultaneously, means to actuate said finger turning rods, and means to actuate said reciprocating table between said two opposite positions.

2. A semi-automatic glove turning machine as set forth in claim **1** wherein said turning tubes and the respectively cooperating turning rods are positioned in an arcuate pattern, means operative after said thumb has been turned to push the thumb portion of the glove into the open area formed by said arcuate pattern, and retaining means to hold said thumb portion in said open area temporarily.

3. A semi-automatic glove turning machine as set forth in claim **1** wherein a pair of bottom cuff clamps are provided at each of said operating stations on said reciprocating table, said clamps engaging the cuff of a glove stretched over said end plungers to hold the fingers of the glove tight on said plungers.

4. A semi-automatic glove turning machine as set forth in claim **1** wherein a pair of top cuff clamps are provided at each of said end stations, said top cuff clamps engaging the cuff of a glove after turning of the several fingers and thumb has been completed, and means to move said top cuff clamps in a direction to pull said glove right side out.

5. A semi-automatic glove turning machine as set forth in claim **4** wherein said means to move said top cuff clamps comprises air cylinder means which first moves said cuff clamps into clamping position and then in the direction to pull said glove right side out.

6. A semi-automatic glove turning machine as set forth in claim **1** wherein said thumb turning tube is mounted on an air cylinder whereby the turning tube is depressed during turning of said thumb and is fully depressed prior to the balance of said glove being completely inverted with the right side out.

7. A semi-automatic glove turning machine as set forth in claim **1** wherein said means to actuate said finger turning rods comprises an air cylinder to first push such rods against said finger portions on said spring loaded end plungers and then pushes said finger turning rods and said finger portions into said finger turning tubes.

8. A semi-automatic glove turning machine as set forth in claim **7** wherein means are provided to adjust and limit the depth of penetration that said finger turning rods and said finger portions enter into said finger turning tubes.

9. A semi-automatic glove turning machine as set forth in claim **1** having means to remove a finished and inverted glove from the machine, said means comprising an air cylinder actuated mechanism that disengages said glove from said turning rods whereby the glove is caused to drop into a receiver for finished gloves.

10. A semi-automatic glove turning machine as set forth in claim **1** wherein said thumb turning rods at said middle station comprise a right hand turning rod and a left hand turning rod respectively, said finger turning rods at said end stations comprise right hand turning rods at one end station and left hand turning rods at the other end station, and said turning tubes at said two stations on said reciprocating table comprising right hand turning tubes at said one station cooperating with said end station having right hand turning rods and left hand turning tubes at the other station cooperating with said other end station having left hand turning tubes.

11. In a semi-automatic glove turning apparatus of the character described the combination of means for turning a glove from inside out to right side out comprising means for mounting a glove in the apparatus, means on the apparatus to first turn the thumb of said glove, means operative to move the turned thumb to an area out of the way of subsequent turning operations, means to turn the fingers of said glove, means to turn the balance of the glove right side out, and means to disengage the completely turned glove from the turning apparatus.

* * * * *