US00D726950S

(12) United States Design Patent

Serwacki et al.

(10) Patent No.: US D726,950 S

(45) Date of Patent: ** Apr. 14, 2015

(54) **LIGHTING ASSEMBLY**

(71) Applicant: **Molex Incorporated**, Lisle, IL (US)

(72) Inventors: **Megan Serwacki**, Oswego, IL (US); **Victor Zaderej**, St. Charles, IL (US); **Michael Picini**, Aurora, IL (US); **Gregory Kuchuris**, Wheaton, IL (US); **Daniel McGowan**, Glen Ellyn, IL (US); **Timothy Canzano**, Glen Ellyn, IL (US)

(73) Assignee: **Molex Incorporated**, Lisle, IL (US)

(**) Term: **14 Years**

(21) Appl. No.: **29/483,557**

(22) Filed: **Feb. 28, 2014**

(51) **LOC (10) Cl.** **26-05**

(52) **U.S. Cl.**
USPC **D26/74**

(58) **Field of Classification Search**
CPC F21V 29/2262; F21V 7/06; F21V 21/044; F21V 21/047; F21V 29/2212; F21V 29/2225; F21V 29/2256; F21V 29/225; F21V 29/2268; F21S 8/02; F21S 8/026; F21Y 2111/002
USPC D26/74, 72, 75, 76, 77, 78, 85, 88, 89, D26/118, 138, 141; 362/364, 365, 373, 145, 362/146, 147, 148, 150, 153, 153.1, 294, 362/296.01, 296.07, 296.08
See application file for complete search history.

(56) **References Cited**

U.S. PATENT DOCUMENTS

D325,999 S * 5/1992 Sonneman D26/152
D399,590 S * 10/1998 Lecluze D26/118
D473,966 S * 4/2003 Lecluze D26/74
D488,583 S * 4/2004 Benghozi D26/118
D544,979 S * 6/2007 Hartmann et al. D26/74
D548,391 S * 8/2007 Lecluze D26/138
D562,489 S * 2/2008 Rashidi D26/74
D609,840 S * 2/2010 Tang D26/74
D622,434 S * 8/2010 Ward et al. D26/74
D668,372 S * 10/2012 Renshaw et al. D26/74
D671,668 S * 11/2012 Rowlette et al. D26/74
D694,456 S * 11/2013 Rowlette et al. D26/74
2008/0212330 A1* 9/2008 Hartmann et al. 362/311

* cited by examiner

Primary Examiner — Angela J Lee
(74) *Attorney, Agent, or Firm* — Banner & Witcoff, Ltd.

(57) **CLAIM**

The ornamental design for a lighting assembly, as shown and described.

DESCRIPTION

FIG. **1** is a front perspective view of a lighting assembly showing our new design;
FIG. **2** is a front view thereof;
FIG. **3** is a rear view thereof;
FIG. **4** is a right side view thereof;
FIG. **5** is a left side view thereof;
FIG. **6** is a top view thereof;
FIG. **7** is a bottom view thereof;
FIG. **8** is a front isometric view of the lighting assembly of FIGS. **1-7** without surface shading and without disclaimed subject matter;
FIG. **9** is a front view thereof;
FIG. **10** is a rear view thereof;
FIG. **11** is a right side view thereof;
FIG. **12** is a left side view thereof;
FIG. **13** is a top view thereof; and,
FIG. **14** is a bottom view thereof.
The broken line showing in FIGS. **1-7** of the lighting assembly is for environmental purposes only and forms no part of the claimed design.

1 Claim, 10 Drawing Sheets

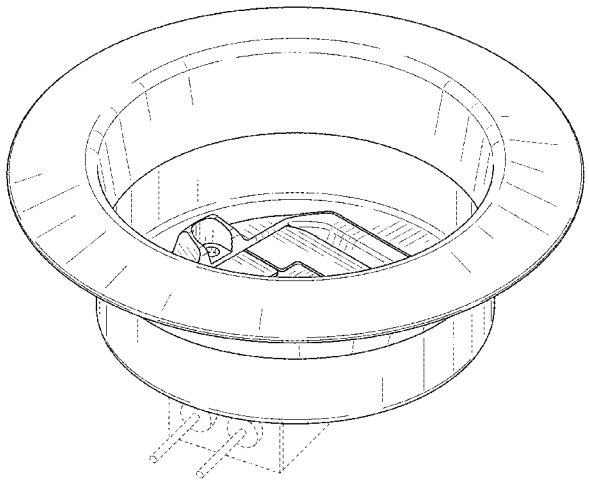

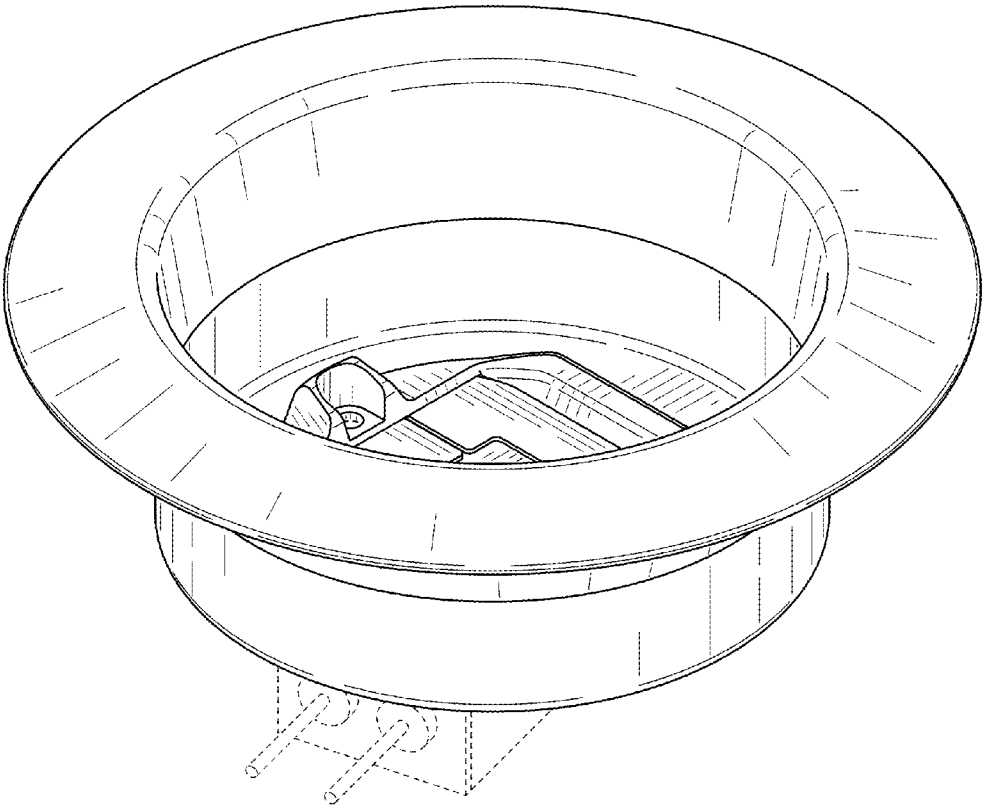

FIG. 1

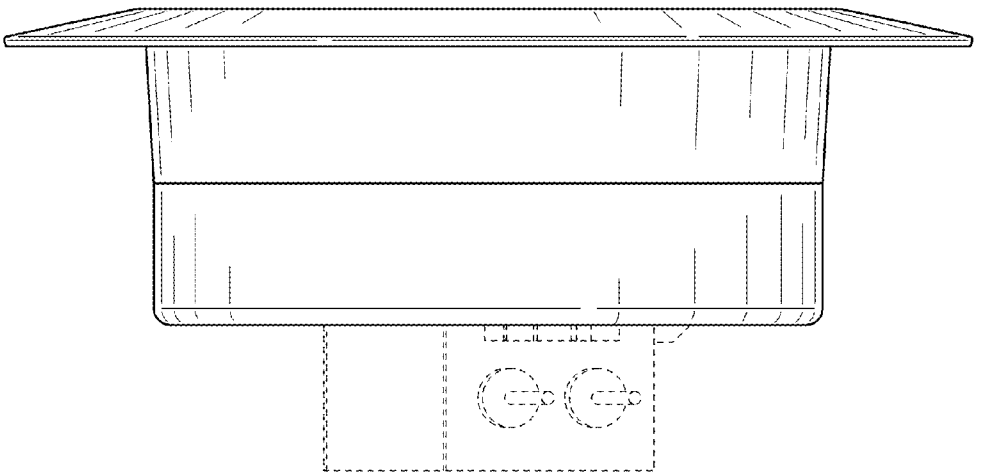

FIG. 2

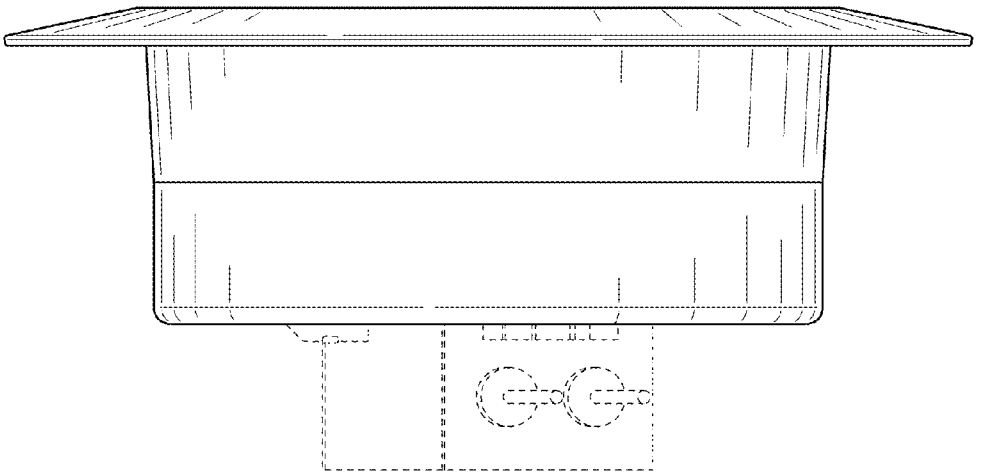

FIG. 3

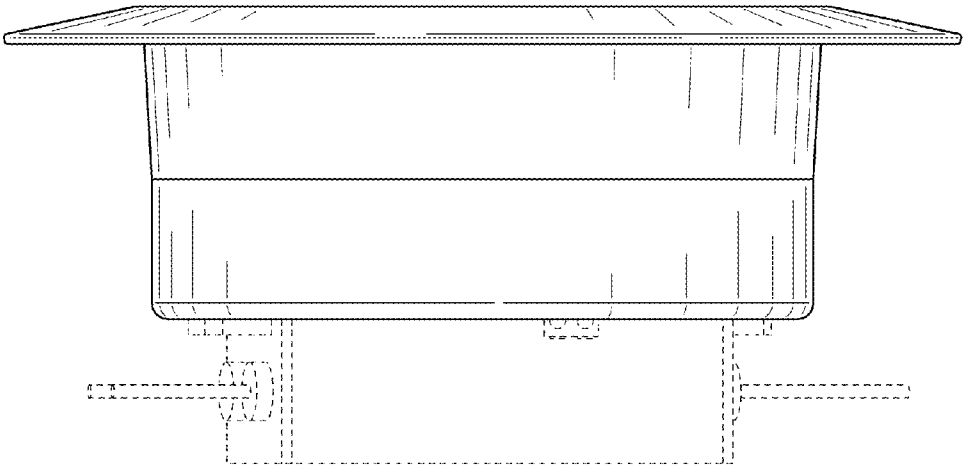

FIG. 4

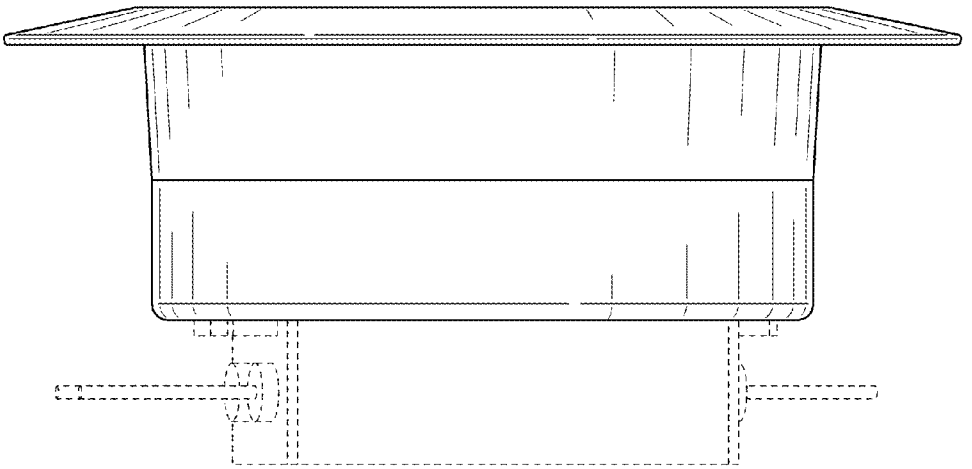

FIG. 5

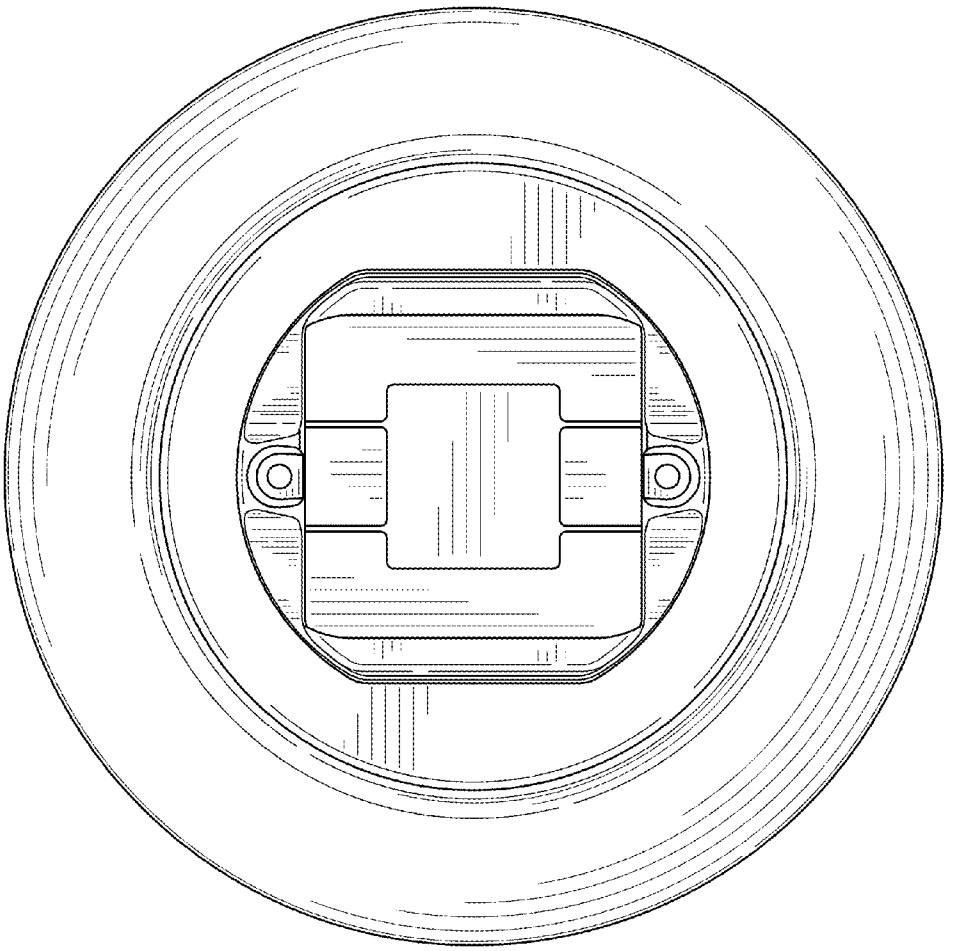

FIG. 6

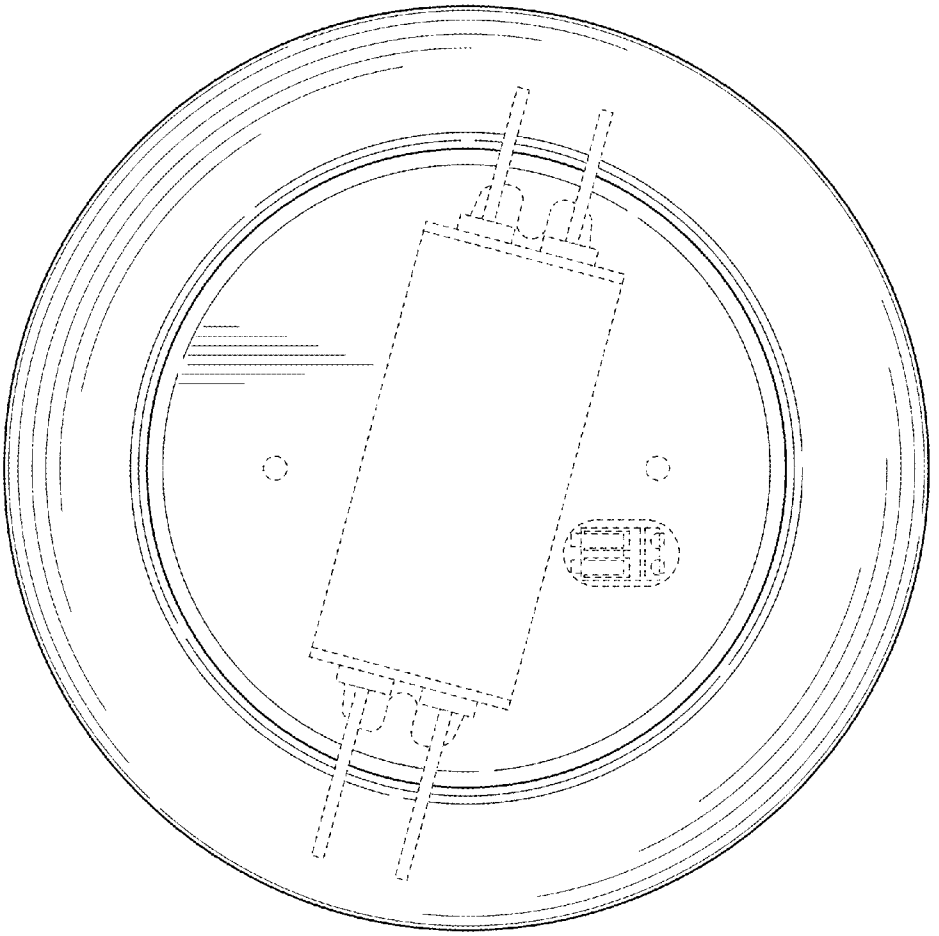

FIG. 7

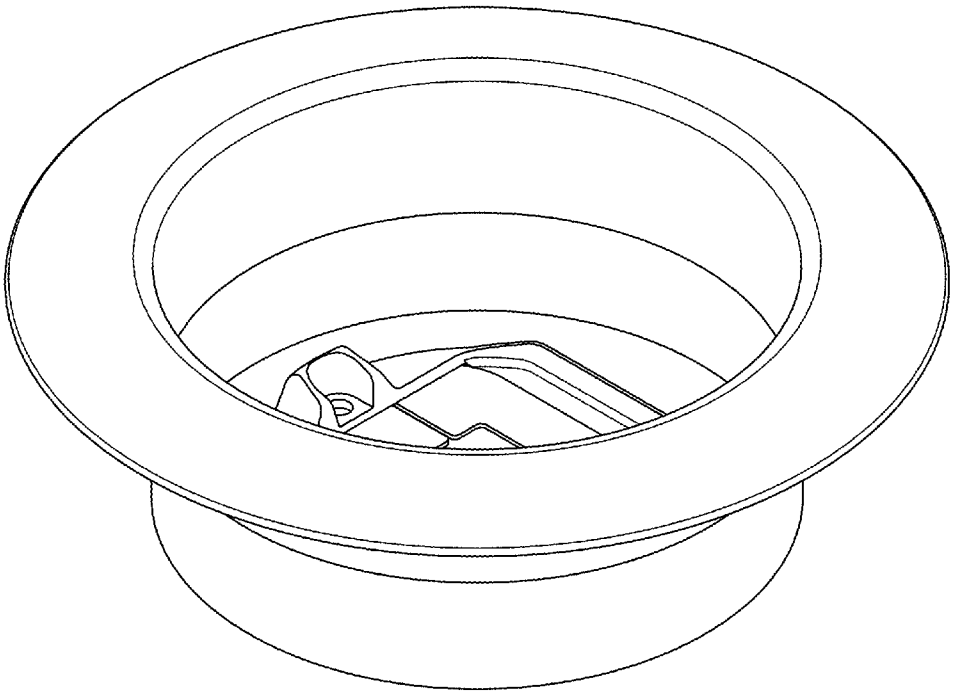

FIG. 8

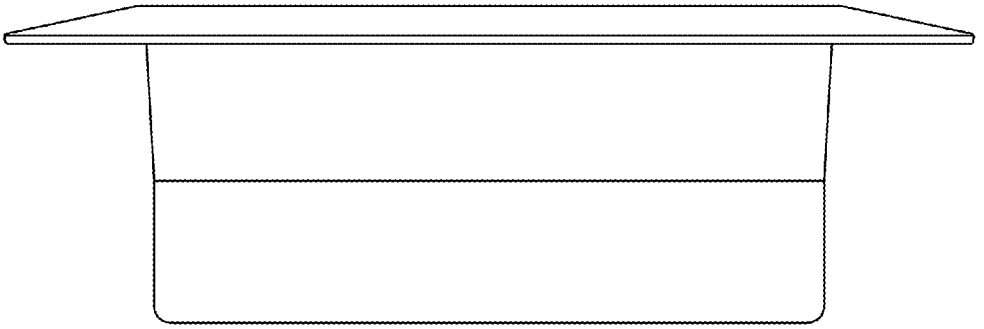

FIG. 9

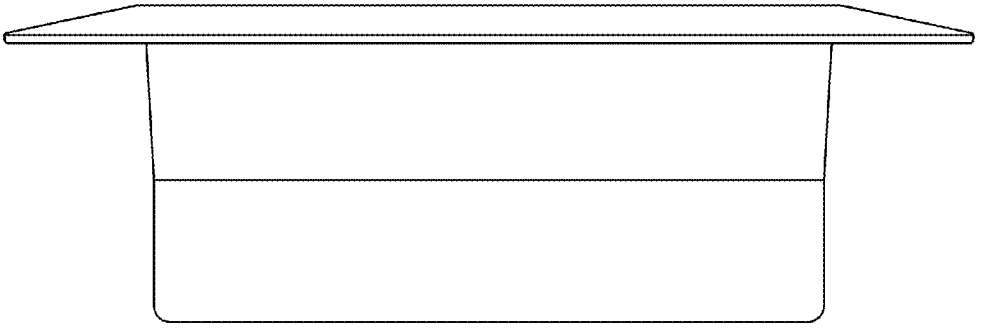

FIG. 10

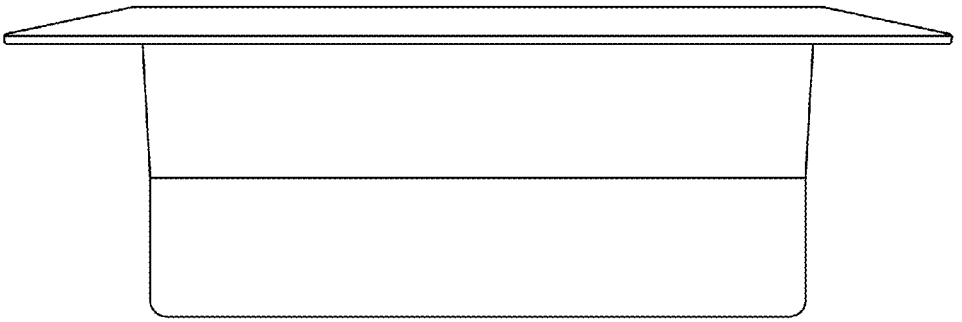

FIG. 11

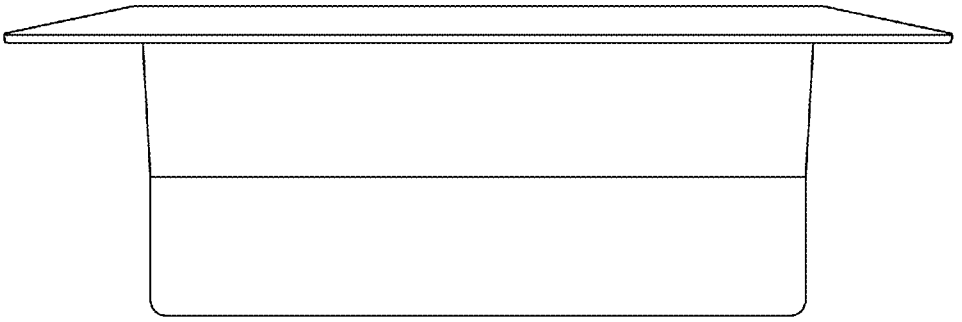

FIG. 12

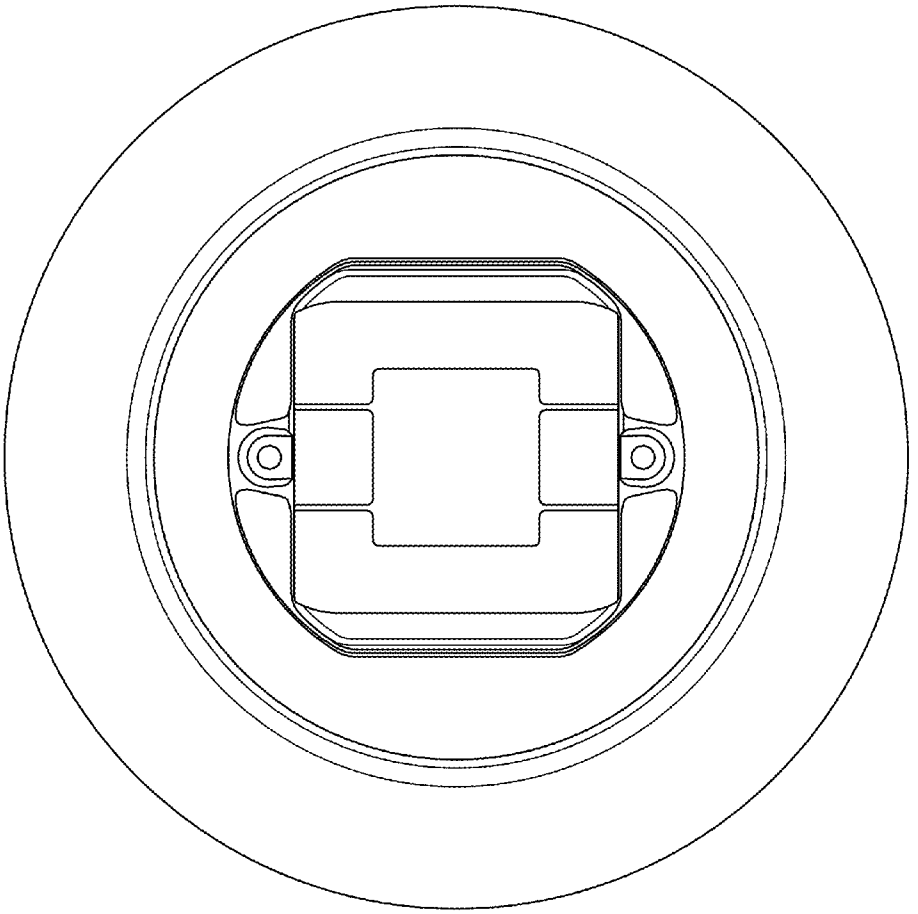

FIG. 13

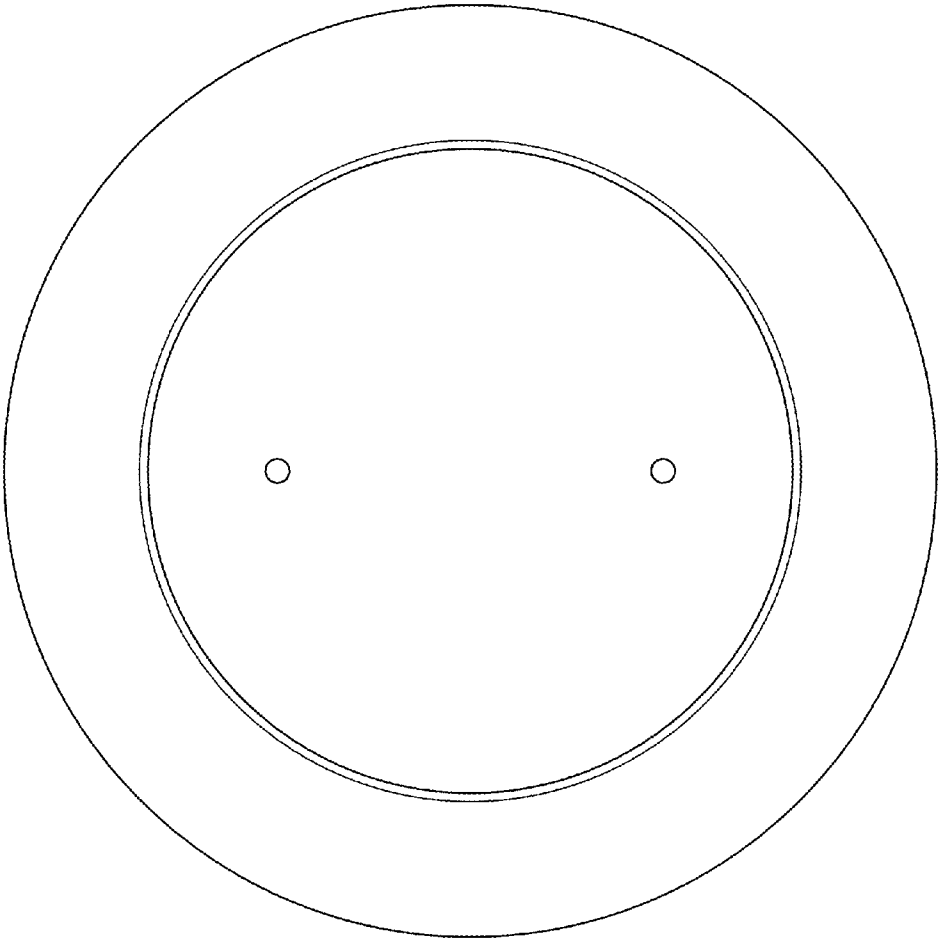

FIG. 14