US00D780269S

(12) United States Design Patent

Isono et al.

(10) Patent No.: US D780,269 S
(45) Date of Patent: ** Feb. 28, 2017

(54) **RADIO REMOTE CONTROL UNIT**

(71) Applicants: **Futaba Corporation**, Mobara-shi, Chiba (JP); **Kom & Co. Design Corp.**, Shibuya-ku, Tokyo (JP)

(72) Inventors: **Takahiro Isono**, Mobara (JP); **Makoto Migita**, Tokyo (JP)

(73) Assignee: **FUTABA CORPORATION**, Mobara-Shi, Chiba (JP)

(**) Term: **15 Years**

(21) Appl. No.: **29/540,374**

(22) Filed: **Sep. 23, 2015**

(30) **Foreign Application Priority Data**

Apr. 28, 2015 (JP) 2015-009582

(51) **LOC (10) Cl.** **21-01**

(52) **U.S. Cl.**
USPC **D21/566**

(58) **Field of Classification Search**
USPC D14/400, 401, 413, 415, 454, 217, 218, D14/358, 155; D13/158, 169; 463/6, 7, 463/29, 35, 36, 37, 38, 39, 46, 47; 446/454–456; 300/315, 329, 332, 335, 300/339, 457, 533
CPC A63H 30/00; A63H 30/02; A63H 30/04; A63H 30/06; G08C 17/00; G08C 17/02; G08C 2201/40; G08C 2201/93
See application file for complete search history.

(56) **References Cited**

U.S. PATENT DOCUMENTS

D344,553	S *	2/1994	Arai	D21/566
5,499,388	A *	3/1996	Song	H04B 1/1027 341/176
D395,472	S *	6/1998	Kanetsuna	D21/566
D471,603	S *	3/2003	Morita	D21/566
D514,172	S *	1/2006	Jinno	D21/566
D517,129	S *	3/2006	Yamamoto	D21/566
D521,573	S *	5/2006	Jinno	D21/566
D546,905	S *	7/2007	Arai	D21/566
7,250,844	B2 *	7/2007	Arai	A63H 30/04 338/118
D573,204	S *	7/2008	Arai	D21/566
D594,071	S *	6/2009	Jinno	D21/566
D636,825	S *	4/2011	Tanaka	D21/566
D650,021	S *	12/2011	Suzuki	D21/566
D670,768	S *	11/2012	Isono	D21/566
D740,708	S *	10/2015	Pecorari	D10/104.1

* cited by examiner

Primary Examiner — Cynthia M Chin
(74) *Attorney, Agent, or Firm* — Quarles & Brady LLP

(57) **CLAIM**

We claim the ornamental design for a radio remote control unit, as shown and described.

DESCRIPTION

FIG. **1** is a perspective view when viewed front and left-side top;
FIG. **2** is a front view;
FIG. **3** is a rear view;
FIG. **4** is a plane view;
FIG. **5** is a bottom view;
FIG. **6** is a right-side view;
FIG. **7** is a left-side view; and,
FIG. **8** is a view showing the article in use, in which a light-emitting part in the center of the front panel lights up in time with power activation.
This article is a radio remote control unit which sends radio waves and carries out the remote control of the body (model) to be controlled.

1 Claim, 8 Drawing Sheets



Fig. 1



Fig. 2



Fig. 3



Fig. 4

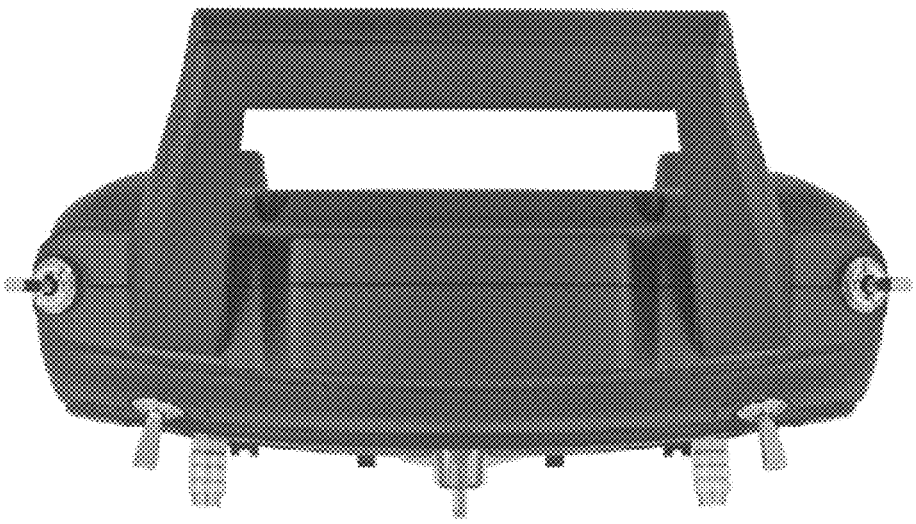

Fig. 5

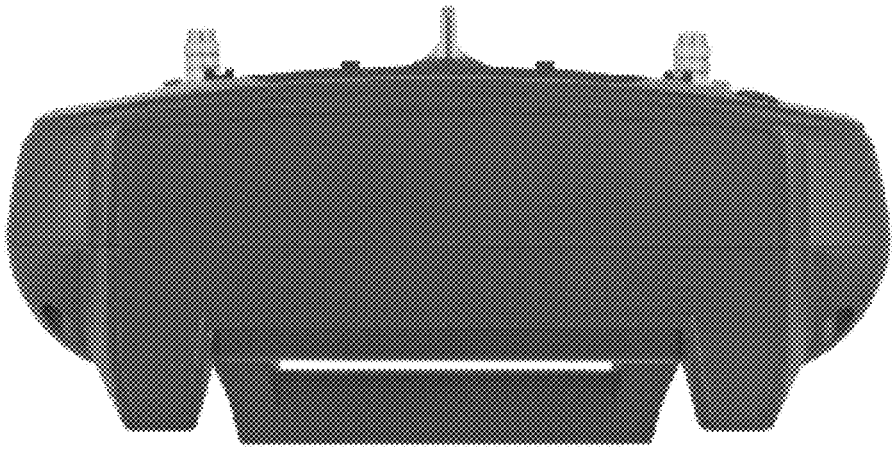

Fig. 6

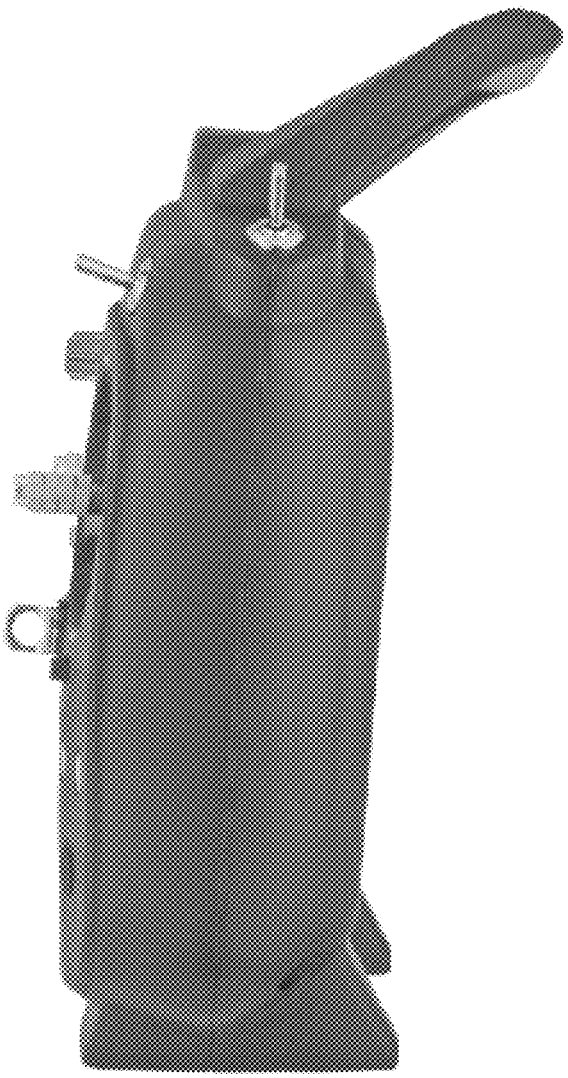

Fig. 7

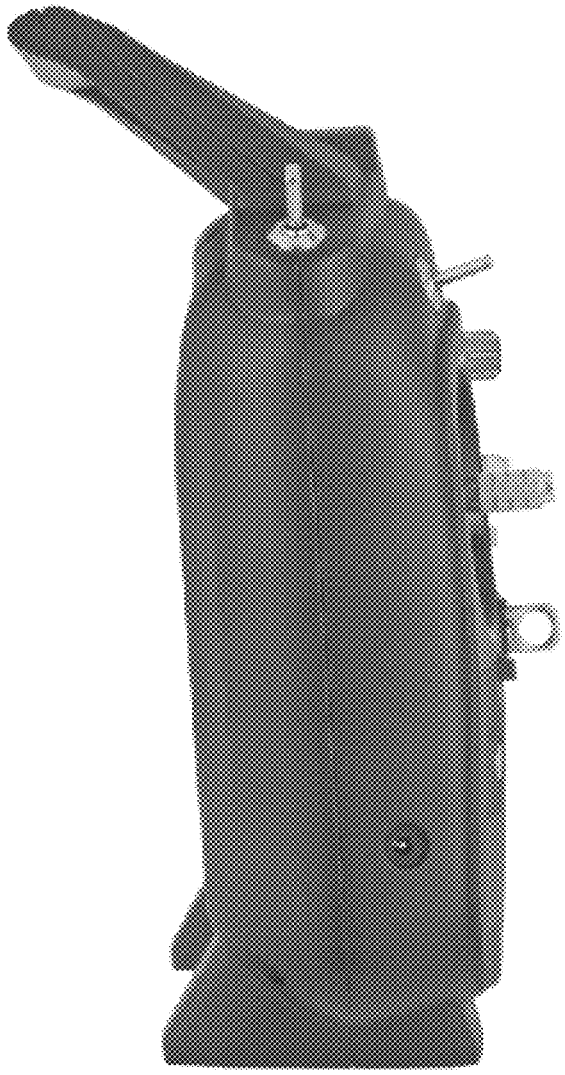

Fig. 8

