(No Model.)

J. LINES.

WELSBACH GAS BURNER.

No. 590,419. Patented Sept. 21, 1897.

Fig. 1

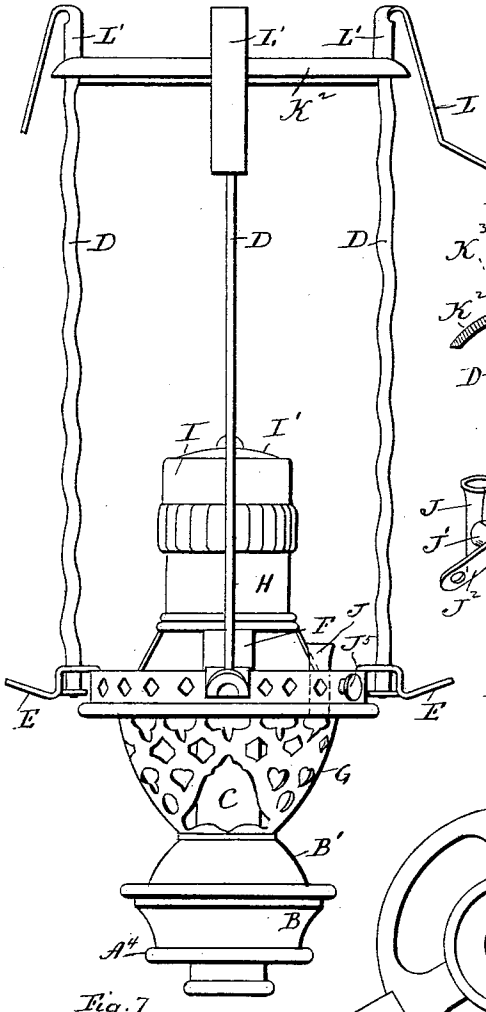

Fig. 2

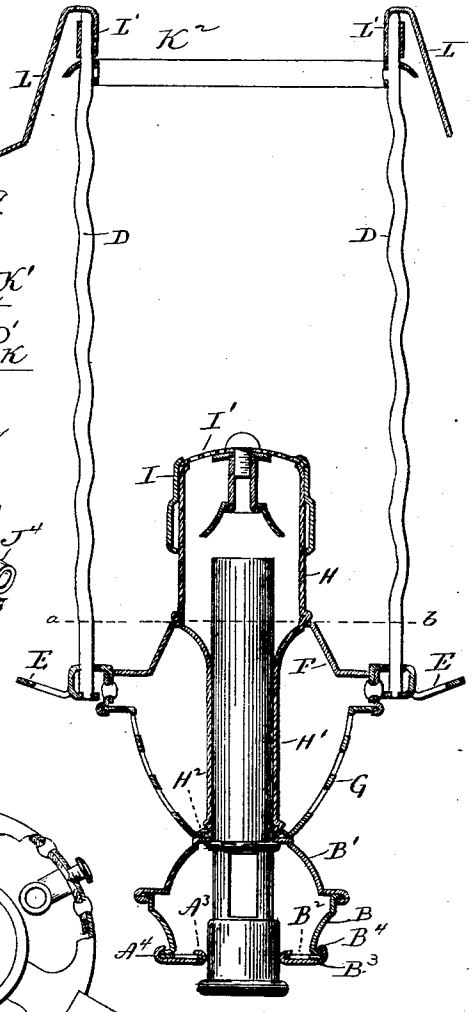

Fig. 9.

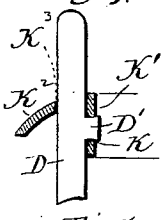

Fig. 8

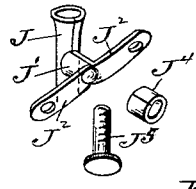

Fig. 3

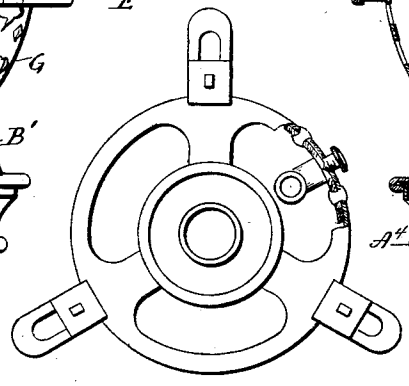

Fig. 7

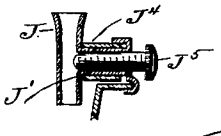

Fig. 5.

Fig. 4

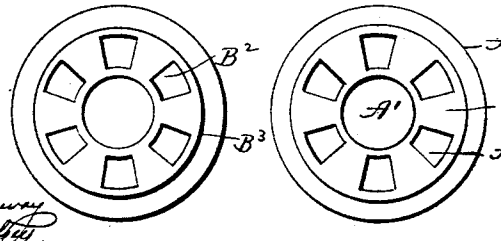

Fig. 6

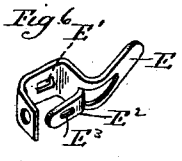

Witnesses.
J. H. Shumway
Lillian D. Kilby

John Lines.
Inventor.
By Atty
Earle Seymour

THE NORRIS PETERS CO., PHOTO-LITHO., WASHINGTON, D. C.

UNITED STATES PATENT OFFICE.

JOHN LINES, OF WATERBURY, CONNECTICUT, ASSIGNOR TO THE SCOVILL MANUFACTURING COMPANY, OF SAME PLACE.

WELSBACH GAS-BURNER.

SPECIFICATION forming part of Letters Patent No. 590,419, dated September 21, 1897.

Application filed May 27, 1896. Serial No. 593,249. (No model.)

To all whom it may concern:

Be it known that I, JOHN LINES, of Waterbury, in the county of New Haven and State of Connecticut, have invented a new Improvement in Welsbach Gas-Burners; and I do hereby declare the following, when taken in connection with the accompanying drawings and the letters of reference marked thereon, to be a full, clear, and exact description of the same, and which said drawings constitute part of this specification, and represent, in—

Figure 1, a view in side elevation of a Welsbach gas-burner constructed in accordance with my invention; Fig. 2, a view thereof in vertical section; Fig. 3, a plan view thereof on the line *a b* of Fig. 2; Fig. 4, a reverse plan view of the air-chamber with the gas-tube removed and showing the annular air-regulating valve; Fig. 5, a similar view of the air-chamber with the valve removed; Fig. 6, a detached perspective view of one of the bobèche-supporting arms; Fig. 7, a view in vertical longitudinal section through the mantle-wire holder, showing its connection with a part of the burner; Fig. 8, a view including detached perspective views of the mantle-wire holder, reinforcing-band, and screw; Fig. 9, broken view, partly in elevation and partly in section, showing the connection of the upper end of one of the uprights with the coupling-ring.

My invention relates to an improvement in gas-burners of the Welsbach type in which a fibrous-mineral mantle is heated to incandescence by a flame of gas, the object being to produce a simple, compact, durable, and convenient burner of workman-like and elegant appearance.

With these ends in view my invention consists in a Welsbach gas-burner having certain details of construction and combinations of parts, as will be hereinafter described, and pointed out in the claims.

In carrying out my invention, as herein shown, I employ a flat annular air-regulating valve A, which is applied to the concaved lower portion B of the air-chamber, which also comprises a low dome-like upper portion B′, the shape of the entire chamber being flattened rather than spherical. The said annular air-regulating valve A has a large central opening A′, through which the gas-tube C passes upward into the burner. The said air-regulating valve is also formed with a circular series of air-ports A^2, designed to register with a corresponding series of air-ports B^2, formed in a horizontal flange B^3, turned inward from the lower portion B of the air-chamber. For securing the air-valve to the air-chamber its inner edge is turned upward and outward to form an annular retaining-flange A^3, which clasps the inner edge of the flange B^3 tight enough to hold the inner or upper face of the air-regulating valve in close contact with the lower or outer face of the flange B^3 without interfering with the rotation of the air-regulating valve. For further securing the said air-valve to the said air-chamber its outer edge is turned upward and inward to form a retaining-flange A^4, which is exteriorly knurled and which clasps an outwardly-projecting annular bead-like flange B^4, formed at the lower edge of the lower portion B of the air-chamber. By thus securing the annular air-regulating valve to the mixing-chamber by its inner and outer edges it is better held against springing away from the air-chamber and "leaking air," so to speak, than if it were secured to the chamber through the medium of its outer edge alone.

By employing a flat annular regulating-valve and securing the same to the lower end of the air-chamber I secure not only economy of metal and labor, but also convenience of operation.

The serpentine uprights D of my improved burner are secured at their lower ends in the bobèche-supporting arms E, which are attached by their inner ends to the depending flange of the burner-cone support F, which in turn is supported upon the perforated burner-body G, resting, when the burner is assembled, upon the air-chamber already described. The said burner-cone support affords a bearing for the burner-cone H, the lower end of which is contracted to form a tube H′, extending downward through the burner-body G, and having its lower end expanded to form the retaining-flange H^2, whereby the burner-cone is held in place. The said burner-cone receives the burner-cap I, which may be of any approved construction, and which contains a wire strainer I′, through which the mixed gas and air issue, and immediately above which

they burn for heating the mantle, which is not shown, to incandescence. I would have it understood, however, that I do not limit myself to constructing the burner-skirt, burner-cone support, burner-cone, and burner-cap in this manner.

With reference again to the bobèche-supporting arms E, each arm is constructed with a bearing-opening E′ and with an integral inwardly-turned horizontally-arranged supporting-finger E^2, having a rivet-hole E^3 arranged below but in line with the bearing-opening E′, the said supporting-finger being formed by cutting out the central portion of the bobèche-supporting arm. The lower ends of the uprights are inserted through the bearing-openings E′ aforesaid and also into the rivet-holes E^3 of the fingers E^2, being riveted into the said holes. The lower ends of the uprights are thus doubly supported, for they are not only rigidly secured to the bobèche-supporting arms, but they are also supported thereby at points above their lower ends, which are riveted thereto.

The mantle-wire holder, which comprises another feature of my invention, is made from a single piece of sheet metal, and comprises a vertical socket J, flaring at its upper end, an outwardly-projecting lateral shank J′, and two retaining-arms J^2 J^2, corresponding to each other and extending in opposite directions from the outer end of the shank and slightly bowed to conform to the curvature of the flange of the burner-cone support, to which the said arms are secured by rivets J^3 J^3, as clearly shown in Fig. 3. For reinforcing the said mantle-wire holder, I preferably locate a sheet-metal collar J^4 upon its shank, though this is not imperative. The said shank is internally threaded for the reception of a retaining-screw J^5, which passes through the flange of the burner-cone support into the said shank, and thence extending into the lower end of the socket J in position to impinge against the extreme lower end of the mantle-wire for holding the same in the socket. The mantle-wire, which may be of any approved form, is not shown.

The upper end of each of the uprights D is furnished with an inwardly-projecting integral rivet D′, passing through a horizontal rivet-hole K, formed in the vertical flange K′ of the coupling-ring K^2, the outer ends of the rivets being headed down upon the outer face of the said flange. The said ring K^2 is itself formed with horizontal bearing-openings K^3, located above and in line with the rivet-holes K and receiving the upper ends of the said uprights, which project upward through them. The said upper ends of the uprights thus have the double support of the said rivets and the said bearing-openings. The projecting upper ends of all the supports extend above the said ring for the application to them of the sheet-metal shade-holders L, the inner ends of which are shaped to form sockets L′, adapting the shade-holders to be applied to the said upper ends of the uprights, which, as herein shown, are made serpentine in form for enhancing their appearance; but this, of course, is not necessary.

It is apparent that in carrying out my invention changes from the construction herein shown and described may be made, and I would therefore have it understood that I do not limit myself thereto, but hold myself at liberty to make such variations therefrom as fairly fall within the spirit and scope of my invention.

Having fully described my invention, what I claim as new, and desire to secure by Letters Patent, is—

1. In a Welsbach gas-burner, the combination with a bobèche-supporting arm constructed with a vertical bearing-opening and with an inwardly-turned, horizontally-arranged supporting-finger formed integral with and turned inward from the said arm, located below the said opening and containing a rivet-hole alined therewith; of an upright set down through the said bearing-opening and into the said rivet-hole in said finger to which its extreme lower end is riveted.

2. In a Welsbach gas-burner, a mantle-wire holder composed of a single piece of sheet metal bent to form a vertical socket, an interiorly-threaded, outwardly-projecting lateral shank, and two oppositely-projecting retaining-arms, located at the outer end of the said shank, and providing for the attachment of the holder to a part of the burner.

3. In a Welsbach gas-burner, the combination with the uprights thereof, the said uprights being constructed near their upper ends with inwardly-extending rivets, of a coupling-ring having a depending flange, applied to the upper ends of said uprights and having horizontal openings through which the said rivets extend inwardly, and the said ring also having a horizontal flange formed with horizontal openings through which the upper ends of the uprights extend, and shade-holders applied to the projecting upper ends of the uprights and extending downward and outward.

4. In a Welsbach gas-burner, a mantle-wire holder comprising a single piece of sheet metal bent to form a vertical socket, the upper end of which is made flaring, an interiorly-threaded outwardly-projecting lateral shank, and two oppositely-projecting retaining-arms located at the outer end of the said shank and providing for the attachment of the holder to a part of the burner, and a sheet-metal collar formed independently of the said holder, and clamped upon the shank thereof for reinforcing the same.

In testimony whereof I have signed this specification in the presence of two subscribing witnesses.

JOHN LINES.

Witnesses:
M. L. SPERRY,
JNO. H. GOSS.