(12) INTERNATIONAL APPLICATION PUBLISHED UNDER THE PATENT COOPERATION TREATY (PCT)

(19) World Intellectual Property Organization
International Bureau

(43) International Publication Date
6 July 2017 (06.07.2017)

WIPO | PCT

(10) International Publication Number
WO 2017/117092 A1

(51) International Patent Classification:
A61M 25/16 (2006.01) *F16C 1/00* (2006.01)
A61M 25/01 (2006.01) *F16C 1/02* (2006.01)

(21) International Application Number:
PCT/US2016/068646

(22) International Filing Date:
27 December 2016 (27.12.2016)

(25) Filing Language: English

(26) Publication Language: English

(30) Priority Data:
62/274,203 1 January 2016 (01.01.2016) US

(71) Applicant: **TRACTUS VASCULAR, LLC** [US/US]; 15 Christopher Way, Eatontown, NJ 07724 (US).

(72) Inventors: **MOQUIN, Craig**; 12 Poplar Place, Fanwood, NJ 07023 (US). **FILACHEK, Andrew**; 1009 Surf Avenue, Beachwood, NJ 08722 (US). **REINHARDT, Paige**; 120 Highland Avenue, Highlands, NJ 07732 (US). **KOEHLER, Matthew**; 10 Harpers Ferry Road, Toms River, NJ 08753 (US). **DE MEDICI, Darren**; 24 Glenn Oak Drive, Middletown, NJ 07748 (US). **BURPEE, Janet**; 56 Buttonwood Drive, Fair Haven, NJ 07704 (US).

(74) Agent: **AGARWAL, Dinesh**; Dinesh Agarwal, P.C., 5350 Shawnee Road, Suite 330, Alexandria, VA 22312 (US).

(81) Designated States *(unless otherwise indicated, for every kind of national protection available)*: AE, AG, AL, AM, AO, AT, AU, AZ, BA, BB, BG, BH, BN, BR, BW, BY, BZ, CA, CH, CL, CN, CO, CR, CU, CZ, DE, DJ, DK, DM, DO, DZ, EC, EE, EG, ES, FI, GB, GD, GE, GH, GM, GT, HN, HR, HU, ID, IL, IN, IR, IS, JP, KE, KG, KH, KN, KP, KR, KW, KZ, LA, LC, LK, LR, LS, LU, LY, MA, MD, ME, MG, MK, MN, MW, MX, MY, MZ, NA, NG, NI, NO, NZ, OM, PA, PE, PG, PH, PL, PT, QA, RO, RS, RU, RW, SA, SC, SD, SE, SG, SK, SL, SM, ST, SV, SY, TH, TJ, TM, TN, TR, TT, TZ, UA, UG, US, UZ, VC, VN, ZA, ZM, ZW.

(84) Designated States *(unless otherwise indicated, for every kind of regional protection available)*: ARIPO (BW, GH, GM, KE, LR, LS, MW, MZ, NA, RW, SD, SL, ST, SZ, TZ, UG, ZM, ZW), Eurasian (AM, AZ, BY, KG, KZ, RU, TJ, TM), European (AL, AT, BE, BG, CH, CY, CZ, DE, DK, EE, ES, FI, FR, GB, GR, HR, HU, IE, IS, IT, LT, LU, LV, MC, MK, MT, NL, NO, PL, PT, RO, RS, SE, SI, SK, SM, TR), OAPI (BF, BJ, CF, CG, CI, CM, GA, GN, GQ, GW, KM, ML, MR, NE, SN, TD, TG).

Declarations under Rule 4.17:

— *of inventorship (Rule 4.17(iv))*

Published:

— *with international search report (Art. 21(3))*

(54) **Title**: FLEXIBLE CATHETER

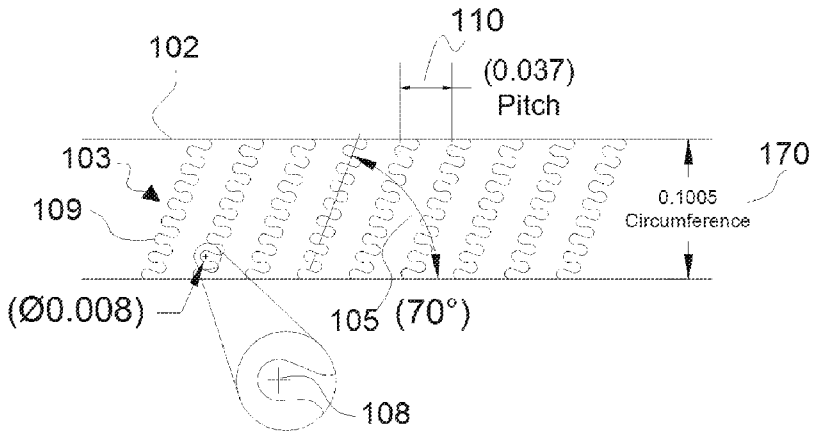

FIG. 1A

(57) **Abstract**: A flexible, elongated catheter tube having distal and proximal ends and a laser cut section there between. The laser cut section makes up a majority of the catheter length and is cut in a continuous helical pattern forming interlocking teeth which can be sinusoidal, triangular, square or likes shapes, preferably sinusoidal. The interior of the catheter tube has a polymeric bi-layer of a nylon or like polymer at the interface of the tube interior and a Teflon or like polymer forms the interior lumen of the catheter. The exterior of the tube has a thin polymer coating of nylon or the like. A short portion of the distal end is uncut and is followed by a narrower terminal section which can be tapered for better blockage penetration. The interlocking teeth disengage and reengage in a fish scale manner without undergoing plastic deformation and without substantial polymer separation.

WO 2017/117092 A1

FLEXIBLE CATHETER

CROSS-REFERENCE TO RELATED APPLICATIONS

[0001] The present application claims priority on prior U.S. Provisional Application S.N. 62/274,203, filed January 1, 2016, which is hereby incorporated herein in its entirety by reference.

FIELD OF THE INVENTION

[0002] This invention relates to a flexible catheter tube which is capable of transmitting rotary and axial motion to resolve blockages in a body lumen such as a blood vessel.

BACKGROUND OF THE INVENTION

[0003] For well over fifty years, there has been a need to create a flexible tube from an otherwise stiff tube by cutting the tube along the length. There are many examples of this design approach for many instruments in medical devices including catheters and guidewires (US Patent 5,573,520), bone reamers (US Patents 5,108,411 and 6,053,922) and other non-medical applications such flexible drill bores for well drilling (US Patent 2,515,365).

[0004] Flexible shafts and couplings are used to transmit rotary power between a power source and a driven part when a straight, unobstructed path is unavailable. A flexible shaft generally consists of rotating shaft with end fittings for attachment to mating parts which together construct a device. The power source is anything which can transmit the correct forces including a motor or a physician's hand. The shaft is envisioned to be used to transmit mo-

tion in a curvilinear manner such as a catheter shaft delivered through the iliac arch in the hip region, or for use as a bone reamer with flexible medullary canal reamers.

[0005] Historically, flexible shafts have been comprised of braided wire, slotted tubing, wound wire, or small diameter polymer tubing. Small diameter polymer tubing is not considered an ideal option for some applications due to a lack of pushability and high risk of kinking. This ability to transmit energy from one end of the shaft to the other is considered one of the most important characteristics when maneuvering through long, tortuous vessels. Hypotube-based shafts with a slotted or spiral cut pattern can extend the traditional limits of metal shafts, but continue to present limitations with flexibility and torque transmission. The traditional spiral cut pattern, for example, tends to wind up when torqued such that a one revolution turn at the torqued, or proximal end does not equal a one revolution turn at the non-torqued or distal end; in the worst cases, a one revolution turn results in a less than one-quarter of a revolution or less. The standard slotted pattern with no or limited male-female portion has better torqueability, but often limited bend radius along one or more planes.

[0006] Catheters and guidewires can include a full or portion of a shaft that is both flexible and torqueable or has a gradient of flexibility and torqueability along the length of the shaft. For optimal steerability and pushability, most catheter designs must have a maximum torsional rigidity while retaining a satisfactory kink-resistance and flexibility. These shafts can be used in many catheters and introducers including those for balloon angioplasty, stent delivery, electrophysiology applications, drug delivery or infusion, atherectomy, crossing catheters, or endovascular surgery. Depending on the application, the optimized and gradation of the flexibility and torqueability can be further modified by having a tube within a tube where the inside or outside tube or both can be comprised of a cut tube of this invention.

[0007] Chronic total occlusion (CTO) remains one of the most challenging pathologies encountered by surgeons and interventionalists alike. CTO is characterized by heavy atherosclerotic plaque burden resulting in complete, or near complete occlusion of a vessel for at least 1-3 months. CTO can occur in any part of the arterial vasculature, however, it is most common

in the legs and other arteries near the heart. Chronic occlusions are present in up to 40% of patients who undergo treatment of symptomatic peripheral artery disease (PAD) and have been cited as one of the primary reasons for procedural failures. PAD is a prevalent condition, affecting about 10 million individuals in the United States and over 27 million individuals worldwide. CTO is also prolific in patients with coronary artery disease (CAD), the number one cause of death in the United States in both men and women, killing over 400,000 each year. Approximately 30% of all coronary angiograms in patients with coronary artery disease will show a CTO.

[0008] Restoring blood flow to the affected area is essential for improving blood supply and tissue perfusion to prevent limb amputation, heart failure and other clinical symptoms associated with these diseases. There are presently two predominate treatment strategies for CTO: bypass surgery or percutaneous recanalization. Until recently, CTOs of the coronary arteries were almost entirely referred for coronary artery bypass graft (CABG) procedures, or many were left untreated because of the high risk and uncertainty regarding CABG success rates. With a failure rate of up to 30%, recanalization poses its own set of technical challenges. A tough, fibrous cap is often present at the proximal and distal ends of the CTO with softer material in between. The majority of recanalization failures are due to an inability to cross the occlusion with the guidewire and balloon technologies currently available. Despite these challenges percutaneous revascularization has been associated with reduced angina, improved left ventricular function, reduced arrhythmias, and reduced mortality. Further innovations and refinement of current crossing catheter technologies are essential to increase procedural success in crossing long, calcified CTOs. Although the worst case for crossing a blocked vessel may be crossing one with a CTO, the intent of the invention is also for use for partial occlusions or simply crossing tortuous anatomy since the given construction can enable optimal performance in many applications.

SUMMARY OF THE INVENTION

[0009] The invention provides a flexible, elongated catheter tube having distal and proximal ends and a laser cut section there between. The laser cut section makes up a majority of the

catheter length and is cut in a continuous helical pattern forming interlocking teeth which can be sinusoidal, triangular, square or likes shapes, preferably sinusoidal, wherein: (i) the interlocking teeth have a diameter of about 0.005 to about 0.015 inch, preferably from about 0.007 to about 0.015 inch; (ii) the helical angle of the center-line of the laser cut is a constant angle between about 64° and about 75°; (iii) the pitch between adjacent rows of teeth is in the range of about 0.028 to about 0.057 inch; (iv) the diameter of said teeth, the helical angle and the pitch resulting in from 4 to 12 repetitions of the teeth around the circumference of the laser cut section; and (v) the outside diameter of the tube is in the range of about 0.010 to about 0.052 inch and the wall thickness is about 0.001 to about 0.005, preferably 0.0015 inch.

[0010] The interior of the catheter tube has a polymeric bi-layer of a nylon or like polymer at the interface of the tube interior and a Teflon or like polymer forms the interior lumen of the catheter. The exterior of the tube has a thin polymer coating of nylon or the like.

[0011] The proximal end of the catheter is uncut and configured for coupling to a luer connection. A short portion of the distal end is also uncut and is followed by a narrower terminal section about 0.149 inch or less in length which can be tapered for better blockage penetration.

[0012] In operation, the interlocking teeth disengage and reengage in a fish scale manner without undergoing significant plastic deformation and without substantial polymer separation when the catheter is flexed as it travels through a body lumen such as a blood vessel. The catheter is thus capable of transmitting an axial, push force against a vascular occlusion to cross same and allow the catheter to advance beyond the occlusion.

[0013] The invention also provides a process for resolving partial or total body lumen blockages or occlusions which includes inserting the catheter described above into body lumen having a blockage at a distal location and advancing the catheter through the body lumen until said distal end encounters the blockage. The interlocking teeth disengage and reengage in a fish scale manner without undergoing plastic deformation and without substantial poly-

mer separation when the catheter is flexed during advancement thru the body lumen. An axial push force is transmitted from the proximal end of the catheter to the distal end to cross the blockage and allow the catheter to advance there beyond.

[0014] The invention further provides catheter tube which in cross section has an inside diameter of not less than about 0.010 inch, a polymeric bi-layer of a nylon polymer at the interface of the tube interior, a Teflon polymer forming the interior lumen of the catheter and a thin polymer exterior coating of a nylon or like polymer. The wall thickness of the catheter with inner layers and an outer coating is about 0.0015 to 0.010, preferably 0.007 inch.

DESCRIPTION OF THE DRAWINGS

[0015] The invention will be more fully understood from the following description and drawings wherein:

[0016] Fig. 1 is a diagrammatic side view of a catheter tube with dimensions of a preferred embodiment by way of example (all dimensions are in inches unless noted otherwise);

[0017] Fig. 1A is an exploded side view of a portion of the cut pattern shown in Fig. 1 with dimensions of a preferred embodiment by way of example;

[0018] Figs. 1B-D are exploded side views of alternate cut patterns for use in the catheter of Fig. 1 with dimensions by way of example;

[0019] Fig. 1E is an exploded side view showing details of the distal end of the catheter of Fig. 1 with dimensions by way of example;

[0020] Figs. 2 and 3 are exploded side views of alternate cut patterns for use in the catheter of Fig. 1 with dimensions by way of example;

[0021] Fig. 4 is a schematic of a diseased artery with a total blockage including a denser end cap;

[0022] Fig. 5 is the same schematic as Fig. 4 showing the catheter of the invention crossing a dense end cap and entering the blockage;

[0023] Fig. 6 is a schematic diagram of the catheter of Fig. 1 having a luer fitting — attached to the proximal end of the catheter to allow flushing of the catheter prior to use;

[0024] Fig. 7 is an alternate embodiment to Fig. 6 wherein the proximal luer is bifurcated to facilitate the delivery of multiple ancillary devices during a medical procedure;

[0025] Fig. 8 is a cross section of the catheter of the invention with inner polymer layers and an outer polymer sheath or coating;

[0026] Fig. 9 is a perspective view of test apparatus used to ascertain flexibility and measure axial push force;

[0027] Fig. 10 is a bar graph of average peak push force measured with the test apparatus shown in Fig. 9;

[0028] Figs. 11-17 depict alternate cut patterns for forming interlocking teeth; and

[0029] Fig. 18 is a sketch of a commercial catheter tested as a control against catheters of the invention.

DETAILED DESCRIPTION OF THE INVENTION

[0030] The catheter of the invention provides an unexpected and surprising combination of flexibility and the ability to deliver an axial push force greater than heretofore possible against an occlusion or total blockage to cross same and allow the catheter to advance there beyond.

Flexibility allows an interventional radiologist using the inventive catheter to apply a twisting force or torque while pushing the catheter forward and follow a tortuous path in a body lumen (such as the iliac arch) without kinking. The distal section can be straight or angled as is known in the art.

[0031] Once kink-free delivery of the distal end to the point of a blockage or an occlusion is accomplished, the radiologist needs to apply axial pressure against the blockage to pass through or cross same to deliver a stent or other device to resolve the occlusion or blockage. For example, calcified lesions in an artery, known as chronic total occlusions (or CTOs) often have end caps that can be significantly harder to pierce or cross than the center of a CTO.

[0032] The catheter of the invention has demonstrated the ability to cross CTOs, even those with denser end caps, by exerting an axial push force in excess of 0.15 pounds and as high as one pound and more which is greater that heretofore possible with known catheters of comparable size. The inability to cross a CTO often leads to alternate and often riskier procedures (like open-heart surgery) to resolve a CTO.

[0033] The inventive catheter gives the radiologist several options for resolving a blockage. Once a guidewire locates a blockage, the inventive catheter can be inserted over the guidewire. A short section of the guidewire protruding from and supported by the catheter can challenge the CTO, or the distal end of the catheter and guidewire can be coextensive when pushed against a blockage or the guidewire can be withdrawn and the necked-down end of the catheter can be pushed through a CTO.

[0034] The structural parameters of the catheter of the invention are critical in achieving kink-free torqueing and sufficient axial force to cross body lumen blockages. For example, the interlocking sinusoidal teeth must be able to disengage and reengage for flexibility without plastic deformation. Lesser values for teeth diameter and the pitch between rows of teeth can provide flexibility, and therefore better torque response around a bend, but at a cost of catheter buckling and decreased transmission of axial force. Exceeding the same values introduces

undesirable stiffness and the inability to traverse tortuous body lumens. The use of interior and exterior polymer coatings (which may extend into, interface or blend with each other through the laser cut lines) aid in allowing the teeth to unlock (flex) and interlock without plastic deformation. Thus, smaller teeth may aid flexibility but easily deform; larger teeth resist unlocking and lead to undesirable stiffness.

[0035] Referring now to the drawings, Fig. 6 shows the inventive catheter generally indicated at 100. Catheter 100 includes a laser cut catheter tube 102 having a luer fitting 101 attached at the proximal end thereof to allow flushing of the catheter prior to use. Catheter 100 is capable of accepting ancillary devices typically used in endovascular and related medical procedures such guidewire 200' which is used to track catheter 100 to the target treatment area in a body lumen or to inject contrast fluid 200 through the catheter to enable imaging during a procedure.

[0036] Fig. 7 is similar to Fig. 6 wherein the proximal luer 101 is bifurcated to facilitate the delivery of multiple ancillary devices 200' through catheter 100 during a medical procedure.

[0037] Fig. 4 shows a diseased artery 300 comprised of an arterial wall 301 and a heavily calcified lesion 302 known as a chronic total occlusion (CTO) which is typically comprised of denser end caps 302' on the proximal and distal ends that are significantly harder to access than the center of CTO 302.

[0038] Fig. 5 shows the distal end of catheter 100 crossing CTO 302 shown in Fig. 4. In order to cross the lesion, catheter 100 is capable of transmitting adequate force to the distal end when being pushed at the proximal and transmit adequate torque to the distal end when torque is applied to the proximal end. Catheter 100 is flexible enough at the distal end to navigate tortuous anatomies of the vasculature in order to reach the target site as well as be able to transmit force and torque in this configuration.

[0039] Figs. 1,1A and 1E show a preferred embodiment of catheter tube 102. The overall length 155 of tube 102 is shown for example as 61.3 inches, it being understood that solid section 157, shown as 8 inches in length, includes a portion which is gripped for laser cutting; end portion 157 is shortened considerably after laser cutting (to from 0.5 to 3 inches for example) for connection to a luer device as shown in Figs. 6 and 7. The finished catheter 100 will typically have an length of 90, 135 or 170cm, depending on the medical procedure being used.

[0040] Fig. 1 indicates two detail portions, the first at 156 for the tube cut pattern shown in Fig. 1A and the other at 158 for the distal end configuration shown in Fig. 1E. Figs. 1A-D and Figs. 2 and 3 show alternate embodiments of the tube cut pattern with dimensions in each figure by way of example. Like elements have like reference numerals.

[0041] Tube 102 has distal and proximal ends 152 and 150 and a laser cut section 154 there between enabling the transmission of rotary and axial motion from the proximal end to the distal end. The laser cut section 154 comprises a majority, i.e., from about 90 to 95%, of the catheter length and is cut in a continuous helical pattern 103 forming interlocking sinusoidal shaped teeth 109 as shown in Figs. 1A-D, 2 and 3. The sinusoidal shape is preferred because it facilitates disengaging and reengaging of teeth 109 when the catheter is flexed. Other useful teeth shapes include triangular and square shapes as shown in Figs. 12 and 13.

[0042] As shown in Figs. 1A-D, 2 and 3, sinusoidal teeth have a diameter 108 in the range of about 0.005 to about 0.015 inch and the helical angle 105 of the center-line of the sinusoidal cut 103 is a constant angle between about 64°and about 75°. The diameter of the interlocking sinusoidal teeth can also be expressed as a percentage of the diameter of tube 102, for example from about 5 to15%, preferably about 8%, of the diameter of catheter tube 102.

[0043] The pitch 110 between adjacent rows of teeth 103 is in the range of about 0.028 to about 0.057 inch. The diameter 108 of teeth 109, helical angle 105 and pitch 110 result in from 4 to 12 repetitions of teeth 109 around the circumference of laser cut section 154.

[0044] The outside diameter of tube 102 is in the range of about 0.010 to about 0.052 inch and the wall thickness is about 0.0015 to about 0.005 inch.

[0045] Fig. 8 shows the catheter of Fig. 1A in cross section having a polymeric bi-layer of a nylon or like polymer 404 at the interface of catheter tube 102 interior, a Teflon or like polymer 102' forming the interior lumen of the catheter, and a thin nylon or like polymer exterior coating 102''.

[0046] Proximal end 150 (Fig. 1) comprises an uncut portion 157 configured for coupling to a luer connection (Figs. 6 and 7). Distal end 152 (Fig. 1E) comprises a solid, uncut section no longer than about 0.02 inch followed by a narrower terminal section no longer than about 0.149 inch in length. Distal end 152 can be narrowed or necked down by compressing end segments 402 created by gusset cuts 401 (Fig. 1E).

[0047] In operation, interlocking teeth 109 disengage and reengage in a fish scale manner without undergoing plastic deformation and without substantial polymer separation when the catheter is flexed. The catheter is thus capable of transmitting an axial push force against a vascular occlusion to cross same and allow the catheter to advance beyond the occlusion.

[0048] Fig. 11 is a schematic of the metallic tube of the middle layer 102" of the catheter shaft 102 having a distal end 100' and a proximal end 100". The middle metallic layer 102" is comprised of a helical sinusoidal cut pattern 103 drawn from a reference or center-line 104 that is on an angle 105 relative to the longitudinal length of the metallic tube 102". The path of the sinusoidal cut pattern has a peak-to-peak amplitude 106 and period 107. The peak-to-peak amplitude 106 of the cut pattern is split into an amplitude on the distal side of the center-line 106' and an amplitude on the proximal side of the center-line 106". Similarly, the period 107 is split into a distal period 107' and a proximal period 107" as illustrated in Figure 11. The peaks and valleys of the sinusoidal cut path consist of a peak cut shape 108, which along with the period 107 creates teeth 109 between adjacent peaks or valleys. A pitch 110, the lon-

gitudinal spacing from center-line to center-line, is a function of the circumference of the metallic tube 102" and the center-line angle 105. The frequency is calculated by dividing the period 107 from the circumference of the metallic tubing 102".

[0049] Fig. 12 shows an alternate embodiment of the cut pattern in Fig. 11, in which the frequency is decreased and the peak cut shape 108 is primarily triangular. The peak cut shape 108 creates teeth 109 that effectively interlock the metallic tubing on the distal and proximal sides of the cut providing increased torque response of the catheter.

[0050] Fig. 13 shows an alternate embodiment of the cut pattern in Fig. 11, in which the frequency is increased and the peak cut shape 108 is primarily a square. The peak cut shape 108 creates teeth 109 that effectively interlock the metallic tubing on the distal and proximal sides of the cut providing increased torque response of the catheter.

[0051] Fig. 14 shows an alternate embodiment of the cut pattern in Fig. 11, in which the distal period 107' and the proximal period 107" are not symmetric. Additionally, the peak cut shape 108 is drawn at a large diameter that along with the distal period dimension 107' creates teeth 109 between adjacent peaks and valleys that effectively interlock the metallic tubing on the distal and proximal sides of the sinusoidal cut providing increased torque response of the catheter.

[0052] Fig. 15 shows an alternate embodiment of the cut pattern in Fig. 11 in which the distal period 107' is greater than the period 107 and the proximal period 107" is equal to the difference between the distal period 107' and the period 107. The shown cut pattern orients the interlocking features primarily in the circumferential direction instead of the longitudinal direction (as shown in previous schematics) to prevent fish-scaling or hinging of the teeth 109 when the catheter is wrapped around a tight bend.

[0053] Fig. 16 shows a cut pattern 103, in which the period 107 decreases and the frequency increases along the length of the catheter from proximal 100" to distal 100'.

[0054] Fig. 17 shows a cut pattern 103, in which the period 107 and peak-to-peak amplitude 106 both decrease along the length of the catheter from proximal 100" to distal 100'.

[0055] The distal portions of the catheter can have a cutting feature or features which can be part of the catheter or a separate cannula that goes either over the outside diameter of the catheter or inside the diameter of the catheter.

[0056] A perfusion feature can be added to the catheter which enable the physician to flow liquid from the proximal end (outside of the body) to the distal end or a location or locations along the length of the catheter (Figs. 6 and 7).

[0057] Another embodiment is a cut pattern similar to that shown in Figs. 16 and 17 where the peak-to-peak amplitude 106 decreases while the period 107 remains constant.

[0058] In all embodiments, the helical angle could decrease or more likely increase from the proximal end to the distal end, or portions thereof including a center section. The helical angle shown in most drawings is 105 degrees, strictly as an example. Another example, the helical angle could start as 70 degrees and finish more distally at 112 degrees where the rate of angle change can be constant along the length or is variable. In all embodiments, the catheter can be used for CTO, partially blocked vessels, or other vessels or channels within a mammalian body. CTO is used as a difficult example or worst case under which the invention could need to perform if put into practice.

[0059] An important aspect of polymeric layers 102', 102'' and 404 (Fig. 8) on both the inside diameter is the ability to greatly reduce "fish-scaling". Fish-scaling is the occurrence of a portion of a tube sticking out of surface of a bend or radius similar to how scales on a fish may protrude if the fish were bent at its half point in its body. Fish-scaling is an occurrence seen in stents that are not fully connected and can result in vessel damage. The reduction of fish-scaling can increase the torqueability, flexibility or other attributes of a catheter depend-

ing on the tradeoffs decided in a given design. An interruption of the cover 102'' or a partial cover can allow an exit point or perfusion of a liquid. The material of cover 102'' can be a polymer or a polymer ceramic or a polymer with metal component such as heat shrunk TEFLON®, PEEK (polyether ether ketone), a combination of both, other like polymers and composites. The sealing or encapsulation material can be heat shrunk, sprayed or flowed onto cut tube 102. The material could also have some radiopaque materials added on some or all of the covering material.

[0060] A specific application of catheter 100 includes supporting a guidewire or catheter while crossing plaque buildup where the plaque creates a partial blockage or a total blockage also referred to as a chronic total inclusion (CTO).

[0061] Other applications which can use catheter 100 include bone reamers and shafts for many surgery devices requiring articulated segments.

EXAMPLES

[0062] Set of three catheters in the Table 1 were tested for flexibility and peak axial push force (lbf) and compared to commercially available catheters (described below) using simulation test apparatus shown in Fig. 9. Track tube 510 simulates the iliac arch and its five turns or bends at 510A-E. Track 510 is connected to bifurcated luer 512 for receiving catheter tube 100 which is fed over a guidewire into track 510 via traveling block 505 and tube 511 which carries collet 508 for gripping catheter 100 while it is pushed through track 510 by advancing block 505 via screw arm 506 which is driven by crank 507. Body temperature water is flowed over catheter tube 100 via water line 509 connected to luer 512. Peak push force is measure by pushing catheter 102 against pressure point 513' of load cell 513, Model MBD-100, and sent to digital reader Model SSI, both made by Transducer Techniques.

[0063] Table 1

Figure No.	Guidewire Compatibility	Outer Catheter Diameter	Tubing Wall Thickness
1B	0.014"	2.9 Fr (0.034")	0.0015"
1A	0.018"	3.16Fr (0.038")	0.0015"
1C	0.035"	4.46 Fr (0.055")	0.00225"
3	0.018"	3.16Fr (0.038")	0.0015"
2	0.018"	3.16Fr (0.038")	0.0015"

[0064] **Formula for Scaling a Design:**

$(D_1/D_2)(T_1)= T_2$

D_1= Diameter of desired tubing size

D_2= Diameter of current tubing size

T_1= Current tooth diameter

T_2= New tooth diameter

$(T_2/T_1)P_1= P_2$

T_1= Current tooth diameter

T_2= New tooth diameter

P_1= Current Pitch

P_2= New Pitch

[0065] Maintain cut angle

OR

[0066] Follow the above when scaling down, but when scaling up:

Maintain tooth diameter and cut angle

[0067] Increase number of repetitions:

$(D_1/D_2)(R_1)= R_2$

D_1= Diameter of desired tubing size

D_2= Diameter of current tubing size

R_1= Current number of Repetitions

R_2= New number of repetitions

[0068] Adjust pitch as necessary to create a continuous pattern.

[0069] Pushability Test Protocol

1) Track an appropriately sized guidewire through the simulated use model.

2) Flush the catheter with saline then track it over the guidewire through the simulated use model until the distal end is close to, but not contacting the load cell.

3) Retract the distal end of the guidewire ~6" from the distal end of the simulated use model.

4) Clamp the system in place with the collet ~1.5" from the entrance to the simulated use model and mark the system just distal to the collet to ensure it does not slip in the fixture during testing.

5) Zero the force gauge then rotate the crank arm until the load cell is preloaded to 0.05 lb +/- 0.003.

6) Set the force gauge to peak and rotate the crank arm 3 full rotations (360° each). This constitutes one push. Each 360° rotation of the pusher arm translates the system 1/8" in the distal direction. Record the peak push force then rotate the arm 3 more times for push two and, again, record the peak force. Continue this method for 5 pushes or until the distal end of the system kinks.

[0070] Commercial catheters, 3 of each design, were tested against the Table 1 catheters in the test apparatus of Fig. 9 following the same pushability protocol as above:

[0071] Control 1: A Cook CXI catheter which is a braided steel catheter (2.6 French) described as the MinaFlex 18 Microcatheter in a 510(k) premarket notification summary submit-

ted to the FDA by Cook International on November 9, 2007 and available online from the FDA database (Ref. K072724).

[0072] Control 2: A Spectranetics Quick-Cross Support Catheter (2.1 French) which is a braided steel catheter described in a 510(k) premarket notification summary submitted to the FDA by Spectranetics Corporation on November 3, 2003 and available online from the FDA database (Ref. K033678).

[0073] Control 3: A Medtronic Total Across catheter which is a spiral cut stainless steel catheter (2.3 French) described in a 510(k) premarket notification summary submitted to the FDA by Medtronic Vascular on November 15, 2013 and available online from the FDA database (Ref. K133539) and depicted in Fig. 18 (drawn from a product brochure) with polymeric distal tip 901 and spiral windings 903 and 904.

[0074] Test results are summarized in the bar graph of Fig. 10 wherein catheters according to the invention (Figs. 1A, 2 and 3) demonstrated average peak push force values on the order of 4 to 5 times higher than the control catheters.

[0075] While this invention has been described as having preferred sequences, ranges, ratios, steps, order of steps, materials, structures, symbols, indicia, graphics, color scheme(s), shapes, configurations, features, components, or designs, it is understood that it is capable of further modifications, uses and/or adaptations of the invention following in general the principle of the invention, and including such departures from the present disclosure as those come within the known or customary practice in the art to which the invention pertains, and as may be applied to the central features hereinbefore set forth, and fall within the scope of the invention and of the limits of the claims appended hereto or presented later. The invention, therefore, is not limited to the preferred embodiment(s) shown/described herein.

WHAT IS CLAIMED IS:

1. Flexible catheter comprising an elongated tube having distal and proximal ends and a laser cut section there between enabling the transmission of rotary and axial motion from the proximal end to the distal end,

a. said laser cut section comprising a majority of the catheter length and being cut in a continuous helical pattern forming interlocking teeth wherein:

i. the interlocking teeth have a diameter of about 0.005 to about 0.015 inch;

ii. the helical angle of the center-line of the helical cut is a constant angle between about 64°and about 75°;

iii. the pitch between adjacent rows of teeth is in the range of about 0.028 to about 0.057 inch, the diameter of said teeth, said helical angle and said pitch resulting in from 4 to 12 repetitions of said teeth around the circumference of the laser cut section; and

iv. the outside diameter of said tube is in the range of about 0.010 to about 0.052 inch and the wall thickness is about 0.0015 to about 0.005 inch;

b. the interior of said tube having a polymeric bi-layer of a nylon or like polymer at the interface of the tube interior and a Teflon or like polymer forming the interior lumen of the catheter;

c. the exterior of said tube having a thin nylon or like polymer coating;

d. said proximal end comprising an uncut portion of the tube configured for coupling to a lure connection;

e. said distal end comprising a solid, uncut section no longer than about 0.02 inch followed by a narrower terminal section no longer than about 0.149 inch in length; and

f. whereby said interlocking teeth disengage and reengage in a fish scale manner without undergoing significant plastic deformation and without substantial polymer separation when the catheter is flexed, and whereby said catheter is capable of transmitting an axial, push force against a vascular occlusion to cross same and allow the catheter to advance beyond the occlusion.

2. Flexible catheter of claim 1 wherein the sinusoidal teeth have a diameter of about 0.008 inch.

3. Flexible catheter of claim 1 wherein the outside diameter of said tube is in the range of about 0.017 to about 0.052 inch.

4. Flexible catheter of claim 1 wherein the thickness of the exterior polymer coating is from about 0.0015 to about 0.004 inch.

5. Flexible catheter of claim 4 wherein the thickness of said exterior polymer coating is about 0.003 inch.

6. Flexible catheter of claim 1 wherein the exterior polymer coating blends with the interior nylon polymer through said helical cut.

7. Flexible catheter of claim 1 wherein the laser cut section comprises from about 95 to about 99 percent of the catheter length.

8. Flexible catheter of claim 1 wherein the helical angle of the center-line of the sinusoidal cut is a constant angle between about 68° and about 70°.

9. Flexible catheter of claim 1 wherein the pitch between adjacent teeth is in the range of about 0.033 to about 0.039 inch.

10. Flexible catheter of claim 1 wherein the interior nylon polymer and the exterior nylon polymer coating are a polyether block amide with a Durometer index between 35 and 72.

11. Flexible catheter of claim 1 wherein interior polymer bi-layer is about 0.0025 inch thick.

12. Flexible catheter of claim 1 wherein the Teflon polymer forming the lumen of said catheter is polytetrafluoroethylene (PTFE) having a static coefficient of friction in the range of 0.05 to 0.08.

13. Flexible catheter of claim 12 wherein the PTFE is about 0.0005 to about 0.001 inch thick.

14. Flexible catheter of claim 1 wherein the catheter tube is full hard 304 stainless steel.

15. Flexible catheter of claim 1 wherein said proximal end is adapted to allow perfusion of the catheter.

16. Flexible catheter of claim 1 wherein the tube is nitinol, steel or other biocompatible metal.

17. Flexible catheter of claim 1 wherein the tube is a polymer or polymer derivative.

18. Flexible catheter of claim 1 which includes a biocompatible hydrophilic coating at least at said distal end.

19. Flexible catheter of claim 1 wherein said proximal end includes a fitting to facilitate guidewire access through the catheter.

20. Flexible catheter of claim 1 wherein the catheter contains holes or slits near the distal end to allow perfusion of liquid.

21. Flexible catheter of claim 1 wherein the narrower terminal section of the distal end includes one or more V-shaped cuts for tapering the terminal section.

22. Flexible catheter of claim 1 wherein the interlocking teeth are sinusoidal, triangular or square shaped.

23. Flexible catheter tube comprising an elongated tube having distal and proximal ends and a laser cut section there between, said catheter in cross section comprising:

a. an inside tube diameter of not less than about 0.010 inch and a tube wall thickness of about 0.0015 to 0.005 inch;

b. a polymeric bi-layer of a nylon polymer at the interface of the tube interior and a Teflon polymer forming the interior lumen of the catheter; and

c. a thin nylon polymer exterior coating.

24. Flexible catheter of claim 23 wherein the exterior coating blends with the interior nylon polymer through said laser cut.

25. Flexible catheter of claim 23 wherein said wall thickness is about 0.0015 inch.

26. Flexible catheter of claim 23 wherein the exterior coating has a thickness from about 0.0015 to about 0.003 inch.

27. Flexible catheter of claim 23 wherein the interior nylon polymer and the exterior nylon polymer coating are a polyether block amide with a Durometer index between 35 and 72.

28. Flexible catheter of claim 23 wherein the Teflon polymer forming the lumen of said catheter is polytetrafluoroethylene having a static coefficient of friction in the range of 0.05 to 0.08.

29. Process for resolving total or partial body lumen blockages which comprises inserting a catheter into body lumen having a blockage at a distal location, said catheter comprising an elongated tube having distal and proximal ends and a laser cut section there between,

a. said laser cut section comprising a majority of the catheter length and being cut in a continuous helical pattern forming interlocking sinusoidal shaped teeth wherein:

i. the sinusoidal teeth have a diameter of about 0.007 to about 0.015 inch;

ii. the helical angle of the center-line of the sinusoidal cut is a constant angle between about 64°and about 75°;

iii. the pitch between adjacent teeth is in the range of about 0.028 to about 0.057 inch, the diameter of said teeth, said helical angle and said pitch resulting in from 4 to 12 repetitions of said teeth around the circumference of the laser cut section; and

iv. the outside diameter of said tube is in the range of about 0.010 to about 0.052 inch and the wall thickness is about 0.0015 to about 0.005 inch;

b. the interior of said tube having a polymeric bi-layer of a nylon polymer at the interface of the tube interior and a Teflon polymer forming the interior lumen of the catheter;

c. the exterior of said tube having a thin nylon polymer coating;

d. said proximal end comprising an uncut portion of the tube configured for coupling to a lure connection;

e. said distal end comprising a solid, uncut section no longer than about 0.02 inch followed by a narrower terminal section no longer than about 0.149 inch in length;

f. advancing said catheter through said body lumen until said distal end encounters the blockage, said interlocking teeth disengaging and reengaging in a fish scale pattern without undergoing significant plastic deformation and without substantial polymer separation when the catheter is flexed during advancement through the body lumen, and

g. transmitting an axial, push force from the proximal end of the catheter to the distal end to cross the blockage and allow the catheter to advance therebeyond.

30. Process of claim 30 wherein the blockage is a chronic total occlusion with or without one or more hard end caps.

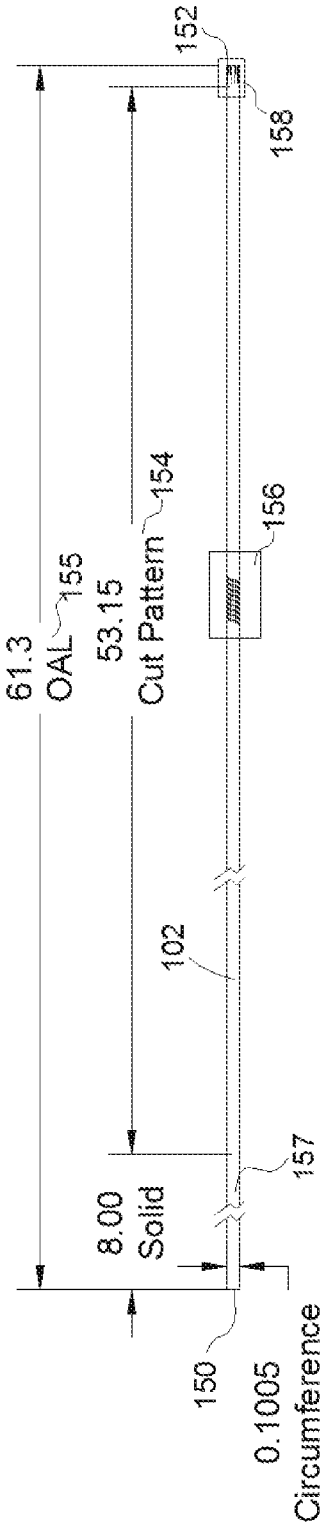
61.3
OAL
155
53.15
Cut Pattern
154
152
158
156
102
8.00
Solid
157
150
0.1005
Circumference

FIG. 1

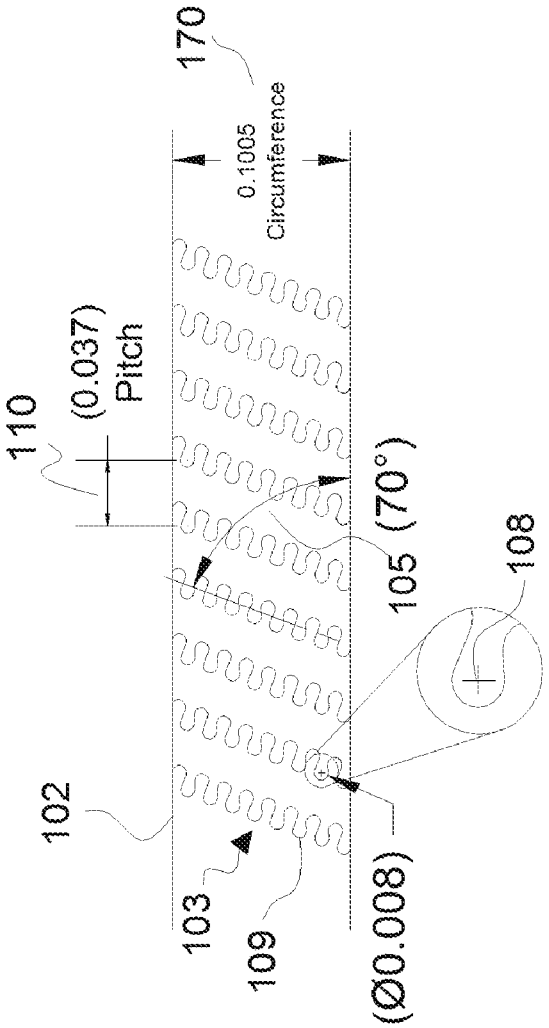
170
0.1005
Circumference
110
(0.037)
Pitch
105 (70°)
108
102
103
109
(Ø0.008)

FIG. 1A

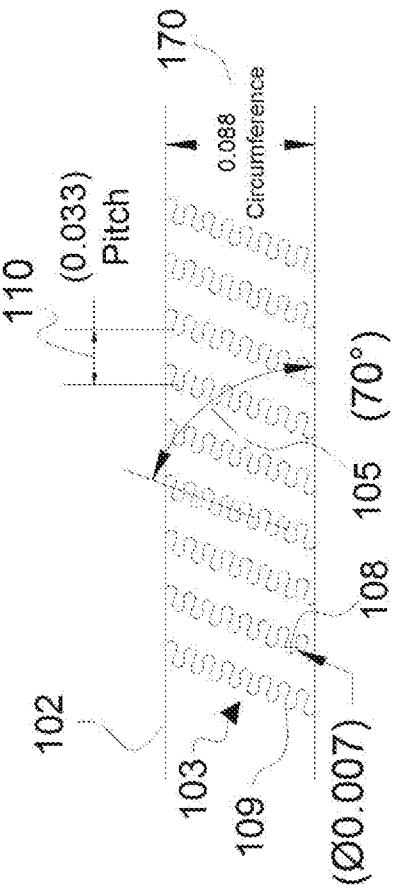
110
(0.033)
Pitch
170
0.088
Circumference
(70°)
105
108
102
103
109
(Ø0.007)

FIG. 1B

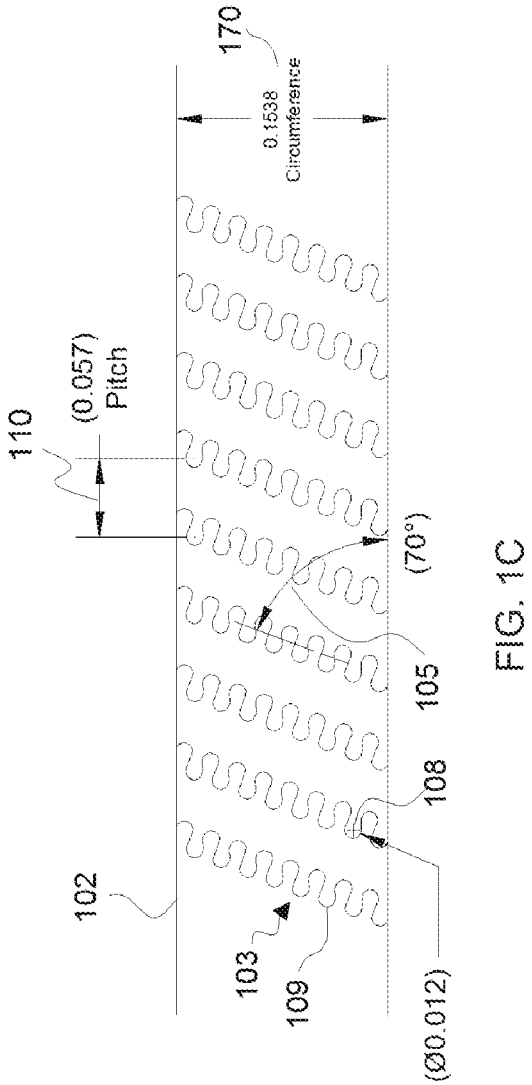
170
0.1538
Circumference
110
(0.057)
Pitch
(70°)
105
108
102
103
109
(Ø0.012)

FIG. 1C

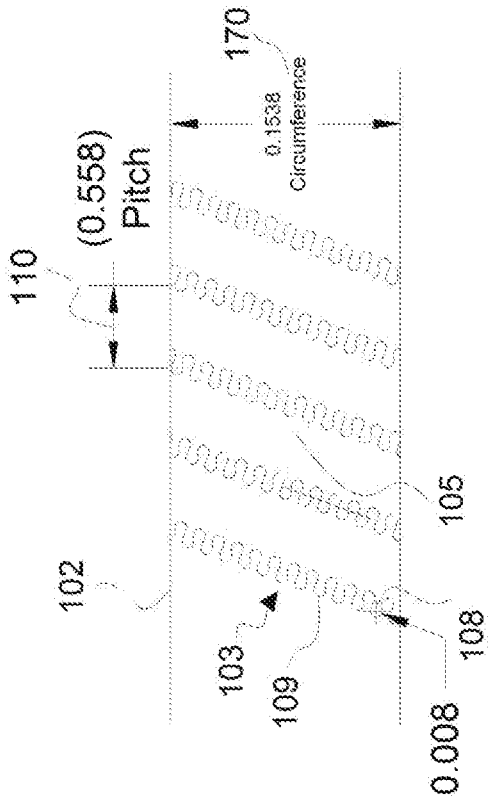
170
0.1538
Circumference
(0.558)
Pitch
110
105
102
103
109
108
0.008

Figure 1D

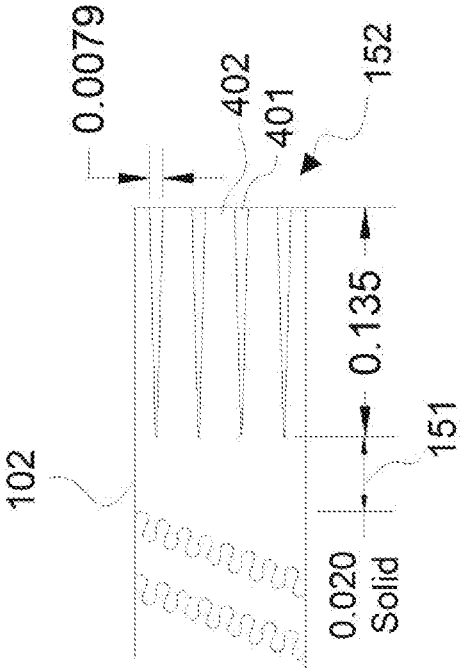

FIG. 1E

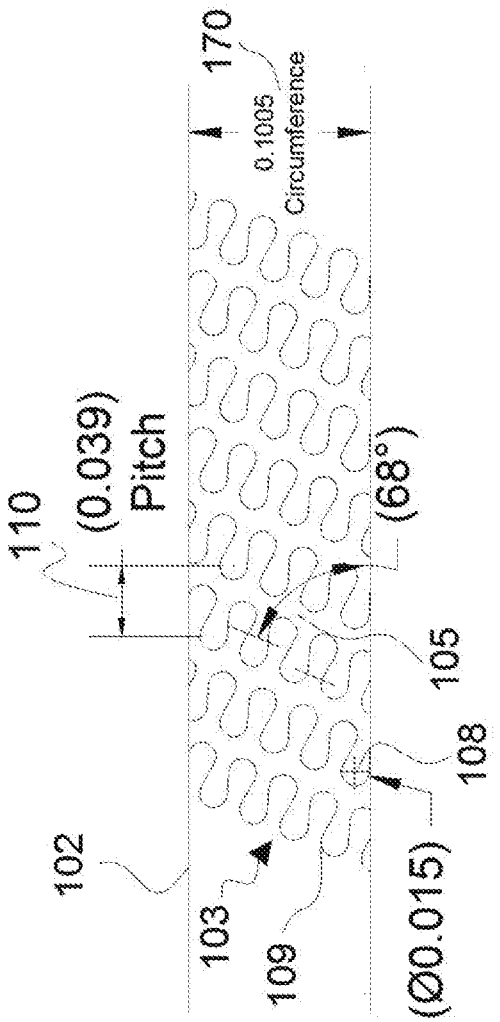
170
0.1005
Circumference
110
(0.039)
Pitch
(68°)
105
108
102
103
109
(Ø0.015)

FIG. 2

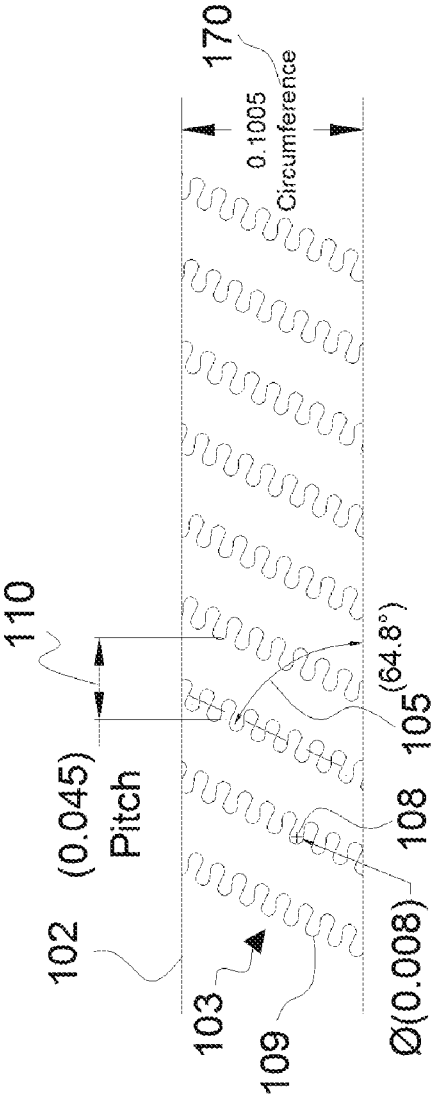
170
0.1005
Circumference
110
(0.045)
Pitch
102
103
109
Ø(0.008)
108
105
(64.8°)

FIG. 3

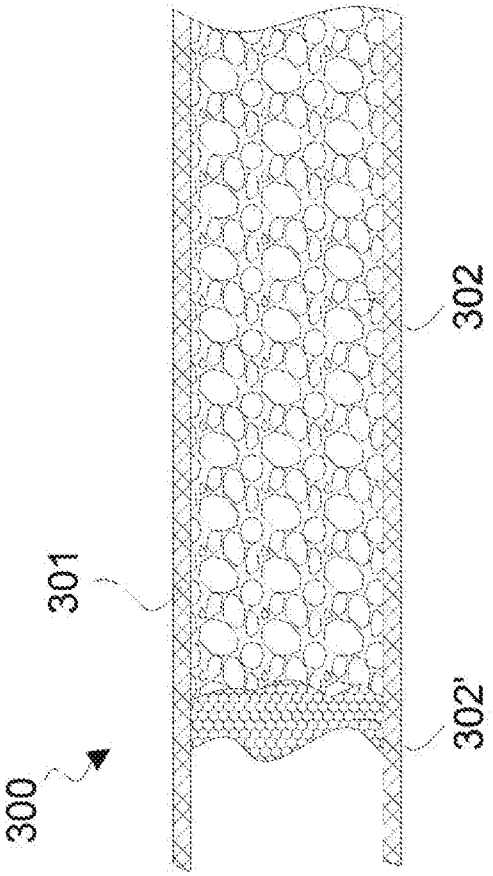

FIG. 4

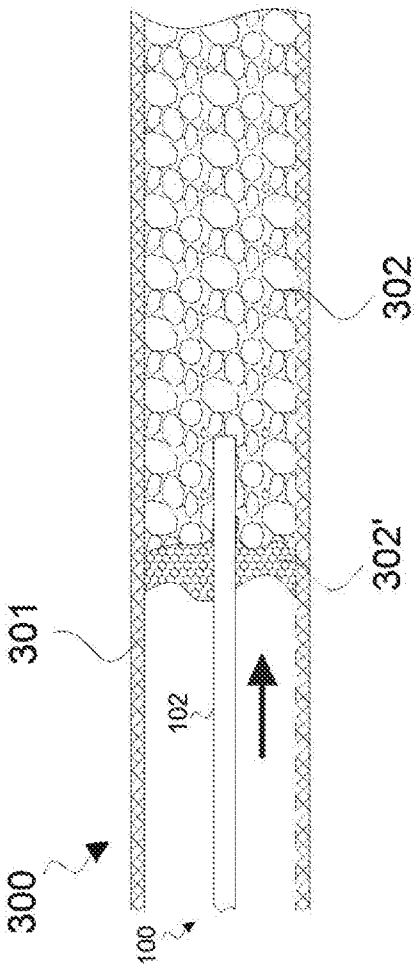

FIG. 5

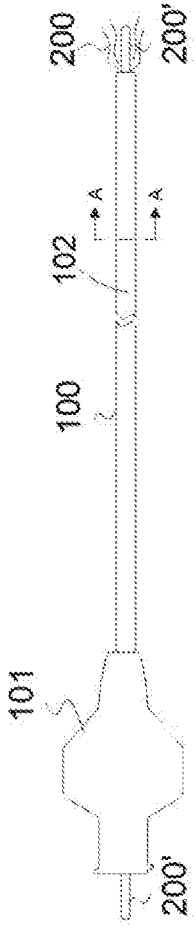

FIG. 6

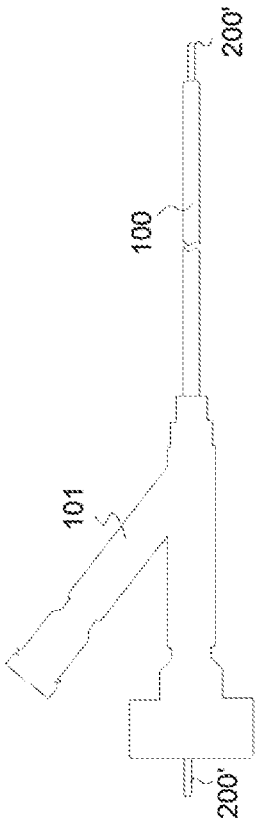

FIG. 7

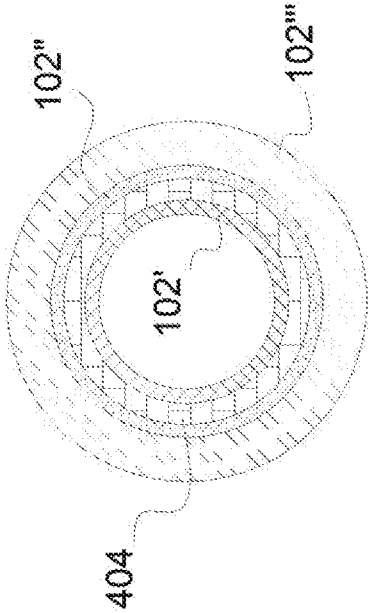

FIG. 8

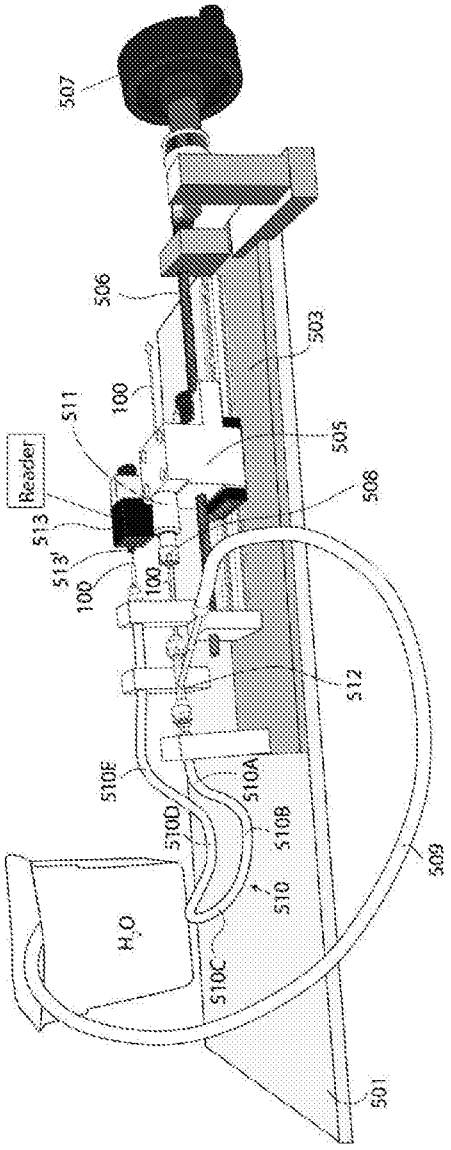
507
506
503
511
100
505
Reader
513
513'
508
100
100
512
510E
510A
510D
510B
510
510C
509
501

FIG. 9

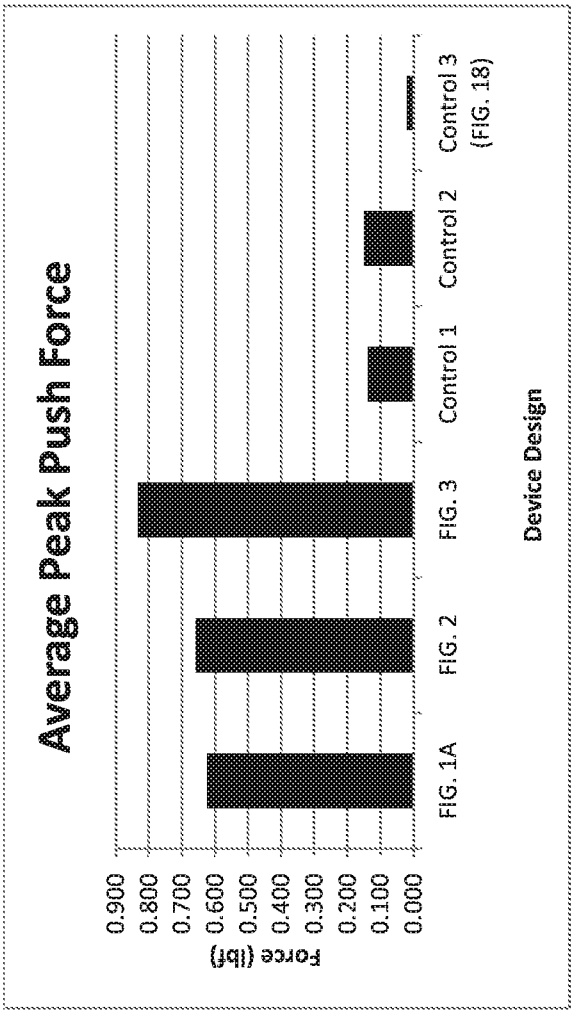
Average Peak Push Force
Force (lbf)
0.900
0.800
0.700
0.600
0.500
0.400
0.300
0.200
0.100
0.000
FIG. 1A
FIG. 2
FIG. 3
Control 1
Control 2
Control 3
(FIG. 18)
Device Design

FIG. 10

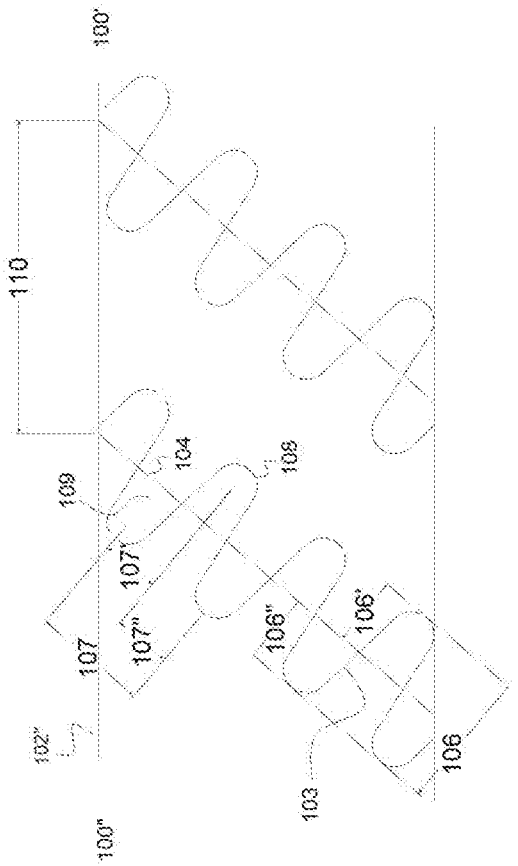

FIG. 11

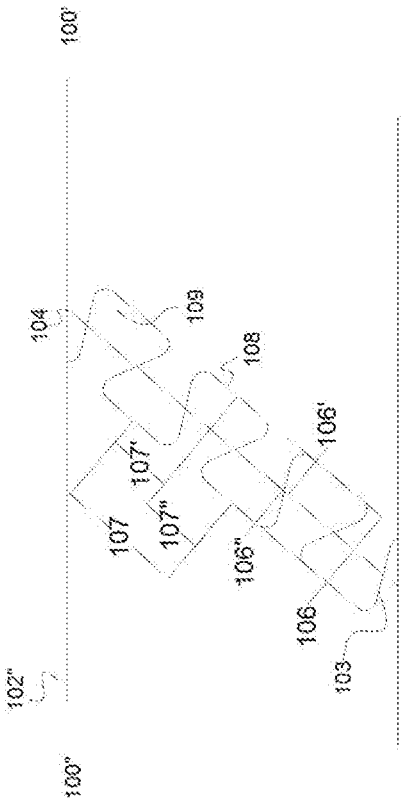
100'
104
109
108
107'
107
107"
106"
106'
106
103
102"
100"

FIG. 12

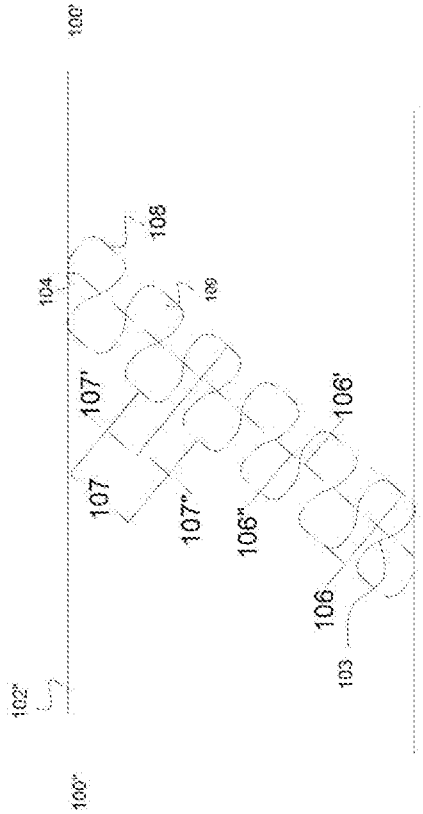
100'
108
104
109
107'
107
107"
106"
106'
106
103
102"
100"

FIG. 13

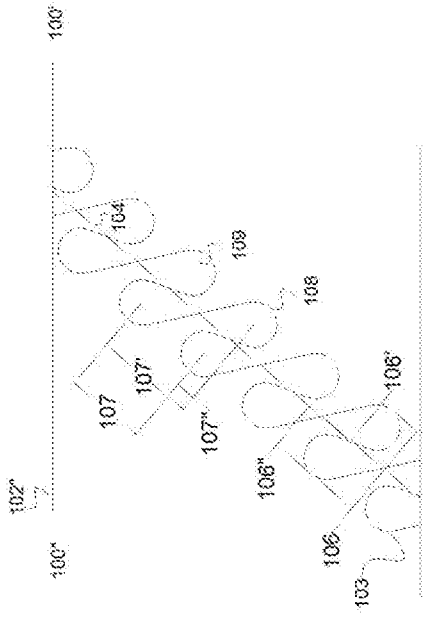
100'
102"
100"
104
109
108
107
107'
107"
106"
106'
106
103

FIG. 15

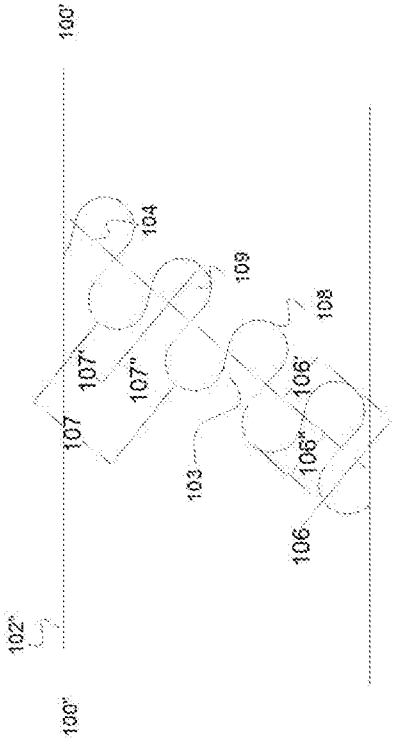
100'
102"
100"
104
109
108
107
107'
107"
106'
106"
106
103

FIG. 14

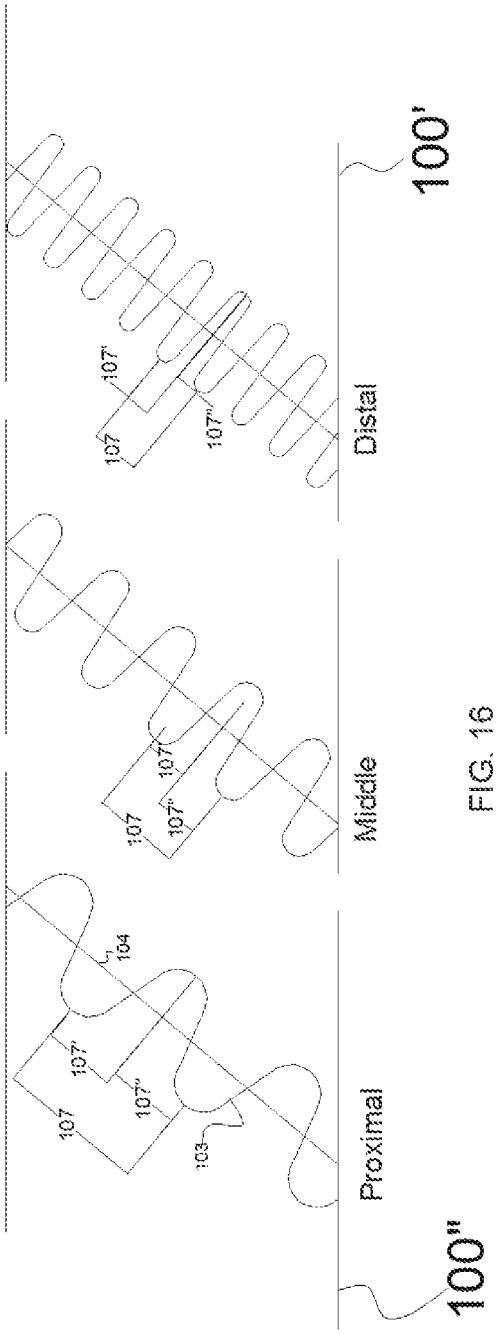
100'
Distal
107'
107
107"
Middle
107'
107
107"
Proximal
104
107'
107
107"
103
100"

FIG. 16

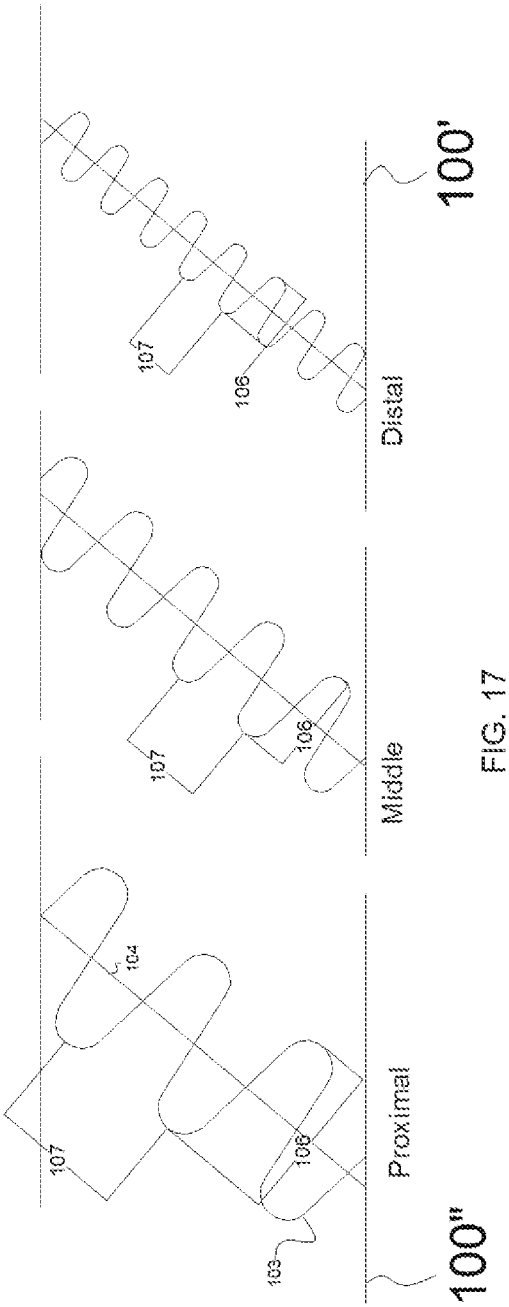
100'
Distal
107
106
Middle
107
106
Proximal
104
107
106
103
100"

FIG. 17

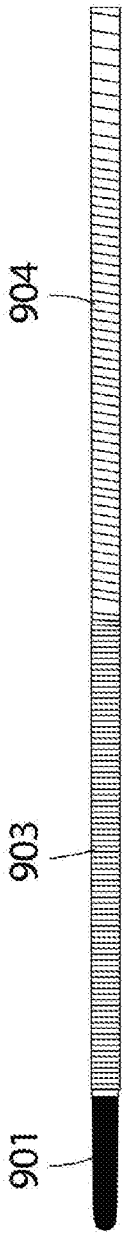
904
903
901

FIG. 18

INTERNATIONAL SEARCH REPORT

International application No.
PCT/US16/68646

A. CLASSIFICATION OF SUBJECT MATTER
IPC - A61M25/16, A61M25/01, F16C1/00, F16C1/02 (2017.01)
CPC - A61M25/0054, A61M25/0013, A61M25/0138, F16C1/02, A61M25/0021, A61M25/0043

According to International Patent Classification (IPC) or to both national classification and IPC

B. FIELDS SEARCHED

Minimum documentation searched (classification system followed by classification symbols)
See Search History document

Documentation searched other than minimum documentation to the extent that such documents are included in the fields searched
See Search History document

Electronic data base consulted during the international search (name of data base and, where practicable, search terms used)
See Search History document

C. DOCUMENTS CONSIDERED TO BE RELEVANT

Category*	Citation of document, with indication, where appropriate, of the relevant passages	Relevant to claim No.
A	US 2002/0038129 A1 (PETERS, G et al.) 28 March 2002; figures 1-3; paragraphs 33-34, 39, 44	1-22, 29-30
A	US 2005/0080400 A1 (CORCORAN, M) 14 April 2005; figure 6B; paragraphs 28, 45-48, 50	1-22, 29-30
A	US 6,053,922 A (KRAUSE, W et al.) 25 April 2000; figure 1; column 8, lines 21-43; column 10, lines 27-43	1-22
A	US 2006/0064123 A1 (BONNETTE, M et al.) 23 March 2006; figures 1, 18; paragraphs 82-83, 87, 102	1-22, 29-30
A	US 2014/0031843 A1 (ROTTENBERG, D et al.) 30 January 2014; figures 1-3; paragraphs 29-36,	23-30
A	US 2014/0135736 A1 (HEBERT, S) 15 May 2014; figure 2A; paragraphs 9, 18, 58-60	23-28
A	US 2006/0084939 A1 (LENTZ, D) 20 April 2006; figures 1-2; paragraphs 13-15, 18	23-28
A	US 2010/0331776 A1 (SALAHIEH, AMR et al.) 30 December 2010; entire document	1-30
A	US 2010/0241154 A1 (LARSON, C et al.) 23 September 2010; entire document	1-30

☐ Further documents are listed in the continuation of Box C. ☐ See patent family annex.

* Special categories of cited documents:
"A" document defining the general state of the art which is not considered to be of particular relevance
"E" earlier application or patent but published on or after the international filing date
"L" document which may throw doubts on priority claim(s) or which is cited to establish the publication date of another citation or other special reason (as specified)
"O" document referring to an oral disclosure, use, exhibition or other means
"P" document published prior to the international filing date but later than the priority date claimed
"T" later document published after the international filing date or priority date and not in conflict with the application but cited to understand the principle or theory underlying the invention
"X" document of particular relevance; the claimed invention cannot be considered novel or cannot be considered to involve an inventive step when the document is taken alone
"Y" document of particular relevance; the claimed invention cannot be considered to involve an inventive step when the document is combined with one or more other such documents, such combination being obvious to a person skilled in the art
"&" document member of the same patent family

Date of the actual completion of the international search	Date of mailing of the international search report
24 February 2017 (24.02.2017)	16 MAR 2017
Name and mailing address of the ISA/ Mail Stop PCT, Attn: ISA/US, Commissioner for Patents P.O. Box 1450, Alexandria, Virginia 22313-1450 Facsimile No. 571-273-8300	Authorized officer Shane Thomas PCT Helpdesk: 571-272-4300 PCT OSP: 571-272-7774

Form PCT/ISA/210 (second sheet) (January 2015)

摘要

本发明涉及一种具有远端和近端以及其间的激光切割节段的柔性细长导管管道。所述激光切割节段构成导管长度的大部分并且是按照连续螺旋式样切割的，从而形成可以是正弦、三角形、正方形或类似形状并且优选地是正弦的互锁锯齿。所述导管管道的内侧在导管内侧的界面处具有尼龙或类似聚合物的聚合物双层，并且特氟龙或类似聚合物形成导管的内腔。管道的外侧具有尼龙或类似材料的薄聚合物图层。远端的一个较短部分未被切割，并且随后是可以被锥化以用于更好的堵塞穿透的更窄的终端节段。所述互锁锯齿按照鱼鳞方式脱离并且重新接合，而不会经历塑性形变并且不会有显著的聚合物分离。