P. S. LIETZ.

COMPOSITION RAILROAD TIE AND METHOD OF MAKING SAME.

APPLICATION FILED AUG. 30, 1917.

1,250,194. Patented Dec. 18, 1917.

Fig. 1

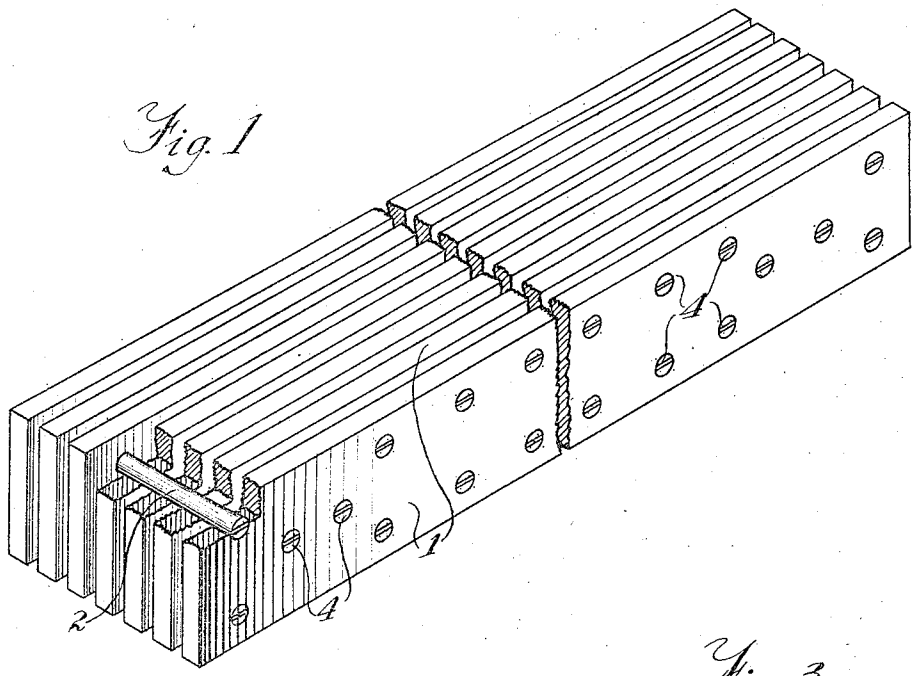

Fig. 3

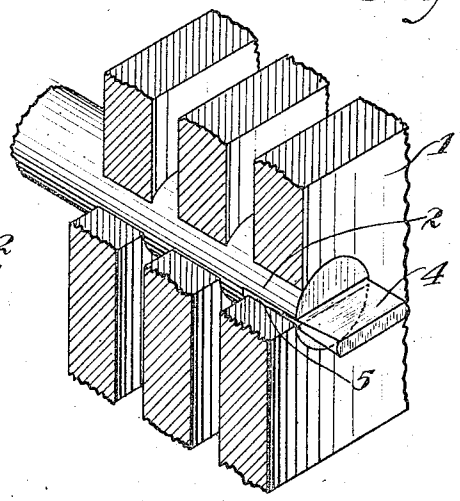

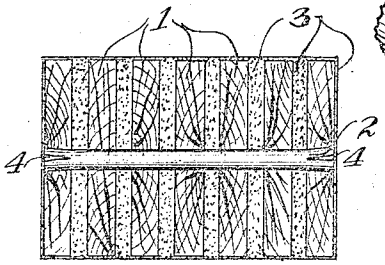

Fig. 2

Witness
George B. Schultz

Inventor
By Paul S. Lietz,
Rummler & Rummler
Attys.

UNITED STATES PATENT OFFICE.

PAUL S. LIETZ, OF CHICAGO, ILLINOIS, ASSIGNOR OF ONE-HALF TO JOHN HUGH WATKINS, OF CHICAGO, ILLINOIS.

COMPOSITION RAILROAD-TIE AND METHOD OF MAKING SAME.

1,250,194. Specification of Letters Patent. Patented Dec. 18, 1917.

Application filed August 30, 1917. Serial No. 188,945.

To all whom it may concern:

Be it known that I, PAUL S. LIETZ, a citizen of the United States of America, and a resident of Chicago, county of Cook, and State of Illinois, have invented certain new and useful Improvements in Composition Railroad-Ties and Methods of Making Same, of which the following is a specification.

The main objects of this invention are to provide an improved form of railroad tie having laminations of wood and a plastic compound compressed and held together so as to form substantially a solid mass; to provide an improved plastic compound especially suitable for adhering to and combining with strips of wood whereby the tie is possessed of the necessary qualities to withstand the tensile and compressional strains to which ties in use are subjected and to resist deterioration; and to provide an improved method of manufacturing in a simple and economical manner ties of this kind.

An illustrative embodiment of this invention is shown in the accompanying drawings, in which—

Figure 1 is a perspective view of the strips of wood showing how they are normally arranged to make up the frame or skeleton and around which the plastic compound is compressed.

Fig. 2 is a sectional view of the completed tie.

Fig. 3 is an enlarged detail showing the manner in which the ends of the dowel pins are secured to the exterior strips of wood.

In the construction shown in the drawings, a plurality of bars or strips of wood 1 are disposed on edge lengthwise of the tie and secured in their spaced relation by means of transverse dowel pins 2, thus forming a rigid frame or skeleton made up of spaced stiffening members. A plastic compound 3 is then forced under great pressure into this frame so as to inclose the wooden bars and fill the spaces between them.

The strips of wood 1 may of course vary in their dimensions, depending upon circumstances. They may, for example, be from $\frac{1}{2}''$ to $\frac{7}{8}''$ thick, from 6″ to 8″ wide, and from 7′ to 12′ long, depending upon the use to which the particular tie is to be put. The spacing of the strips also may vary, depending upon the size of the strips. Usually, the spacing is $\frac{1}{8}''$ to $\frac{1}{2}''$.

The dowel pins 2 are preferably of hardwood from $\frac{1}{2}''$ to $\frac{3}{4}''$ in diameter and are suitably distributed throughout the group of strips to avoid the areas into which the rail spikes will be driven in fastening the rails. The ends of the pins are suitably secured to the exterior strips flush with the outer faces thereof. A convenient method of accomplishing this is shown in Fig. 3, and consists of driving a wedge 4 into a slit 5 in the end of the dowel pin so as to spread the same in the manner indicated and wedge it into secure holding relation with the surrounding wood of the bar.

A suitable plastic compound for the purpose of this invention comprises asphalt or some asphaltic oil or product; sand, earth, or clay; cement, asbestos, or some other fibrous material; and rosin. The proportions in which these products are mixed depend more or less upon the conditions under which the ties are to be used, consideration being given to the climate and whether they are to be used above or under the ground. For these reasons, the proportions of different ingredients may be varied between wide limits, for example:

Asphalt, or an asphaltic product	10 to 20 per cent.
Sand, earth or clay	76 to 40 per cent.
Cement	10 to 20 per cent.
Asbestos, or other fibrous material	2 to 10 per cent.
Rosin	2 to 10 per cent.
	100 100 per cent.

The method of forming or building up the tie comprises four principal steps, namely, constructing the wooden frame, waterproofing it, filling in the plastic compound, and applying pressure.

In forming the frame, the strips 1 of wood are arranged on edge side by side in the desired spaced relation and firmly connected together by the dowel pins 2, care being taken to distribute the dowels to best advantage. The waterproofing of the frame is most conveniently accomplished by placing it in a bath of boiling asphaltic oil and allowing it to remain immersed until all the moisture is driven out of the wood and the pores thereof are thoroughly impregnated with the oil or other waterproofing compound. The frame is then placed in a steel

form of suitable dimensions, then the plastic compound in a heated molten condition is poured in and tamped in a suitable manner so as to cause it to fill all the spaces between and about the strips 1. The frame is covered to a depth of a few inches, and the top of the form is placed in position thereon. The contents of the form are then subjected to hydraulic pressure so as to compress the plastic compound and cause it to be firmly pressed into contact with the faces of the strips 1 and into all the spaces and interstices, so that it becomes intimately united with the wood. After cooling the tie while under pressure, the operation is completed and the tie removed ready for use.

A railroad tie formed in accordance with this method has many advantages. In the first place, it is much more economical than the solid wooden ties at present in use, for the reason that it requires only from one-half to two-thirds the amount of wood. The wood can be of the cheapest kind both as regards the kind of timber from which the strips are cut, and also the parts of the log which may be used. In the second place, such a tie embodies all the characteristics necessary to resist and withstand both the tensile and compression strains to which a railroad tie is subjected. With this tie, the strips of wood 1, being placed on edge and extending throughout the length of the tie, provide the necessary resistance to the tensile strains, whereas the plastic compound is peculiarly suitable to resist the compression. At the same time the tie possesses a certain degree of resiliency which tends to enhance the life of the tie. Furthermore, such a tie is practically indestructible, since it is absolutely impervious to water and to deterioration through the action of the elements, and may be used in any place that the ordinary solid wooden tie may be used, and in fact, a great many places where such a tie would not be suitable. Spikes may be driven into this composite tie at any point and are held against removal with greater tenacity than in the ordinary form of wooden tie.

Although but one specific embodiment of this invention has been herein shown and described, it will be understood that details of the construction shown may be altered or omitted without departing from the spirit of the invention as defined by the following claims.

I claim:

1. A composite railroad tie, comprising a plurality of alternate layers of wood and plastic compound rigidly secured together the layers of plastic material being of sufficient thickness to form a substantial part of the tie.

2. A composite railroad tie, comprising a plurality of comparatively thin strips of wood disposed on edge lengthwise of the tie and uniformly spaced a substantial distance apart, and a plastic compound compressed into the spaces between said strips of wood.

3. A composite railroad tie, comprising a plurality of comparatively thin strips of wood disposed on edge lengthwise of the tie and uniformly spaced apart, dowel pins extending transversely through said strips and arranged to support and retain said strips in their spaced relation, and a plastic compound compressed into the spaces between said strips of wood.

4. A composite railroad tie, comprising a plurality of comparatively thin strips of wood disposed on edge lengthwise of the tie and uniformly spaced apart, dowel pins extending transversely through said strips with their ends wedged flush in the exterior strips and arranged to support and retain said strips in their spaced relation, and a plastic compound compressed into the spaces between said strips of wood.

5. A composite railroad tie, comprising a plurality of comparatively thin strips of wood disposed on edge lengthwise of the tie and uniformly spaced apart, and a plastic compound compressed into the spaces between said strips of wood, said strips of wood being coated with an asphaltic product for facilitating the adhesion of said compound to the faces of said strips.

6. A composite railroad tie, comprising a plurality of comparatively thin strips of wood disposed on edge lengthwise of the tie and uniformly spaced apart, and a plastic compound compressed into the spaces between said strips of wood, said compound comprising principally an asphaltic product, sand, earth and cement.

7. A composite railroad tie, comprising a plurality of comparatively thin strips of wood disposed on edge lengthwise of the tie and uniformly spaced apart, and a plastic compound compressed into the spaces between said strips of wood, said compound comprising an asphaltic product, sand, earth, cement, fibrous material, and rosin.

8. A composite railroad tie, comprising a plurality of comparatively thin strips of wood disposed on edge lengthwise of the tie and uniformly spaced apart, and a plastic compound compressed into the spaces between said strips of wood, said compound comprising an asphaltic product, sand, earth, cement, fibrous material, and rosin, mixed substantially as described.

9. The process of making a composition railroad tie which consists in connecting together in spaced relation a plurality of strips of wood arranged parallel on edge so as to form a skeleton frame, treating said frame with a waterproofing substance, and then filling a plastic compound in the spaces between said strips.

10. The process of making a composition railroad tie which consists in connecting together in spaced relation a plurality of strips of wood arranged parallel on edge so as to form a skeleton frame, immersing said frame in an asphaltic oil, and then filling a plastic compound in the spaces between said strips.

11. The process of making a composition railroad tie which consists in connecting together in spaced relation a plurality of strips of wood arranged parallel on edge so as to form a skeleton frame, immersing said frame in an asphaltic oil, placing said frame in a receptacle, filling said receptacle and the spaces in said frame with a plastic compound, and then applying pressure so as to compress said compound in and around said frame.

12. The process of making a composition railroad tie which consists in connecting together in spaced relation a plurality of strips of wood arranged parallel on edge so as to form a skeleton frame, immersing said frame in a hot asphaltic oil, placing said frame in a receptacle, filling said receptacle and the spaces in said frame with a molten plastic compound, and then applying pressure so as to compress said compound in and around said frame.

Signed at Chicago this 28th day of August, 1917.

PAUL S. LIETZ.