G. SAURBREY.

BURGLAR-ALARM WINDOW-FASTENINGS.

No. 194,376. Patented Aug. 21, 1877.

FIG.1.

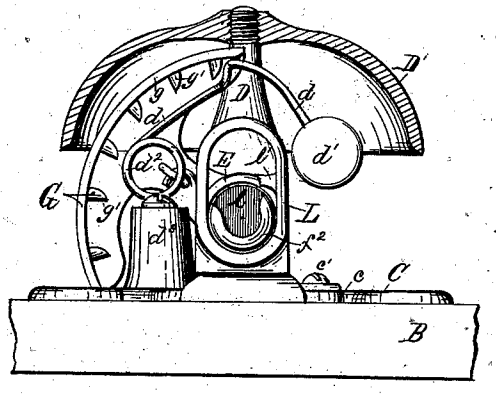

FIG.2.

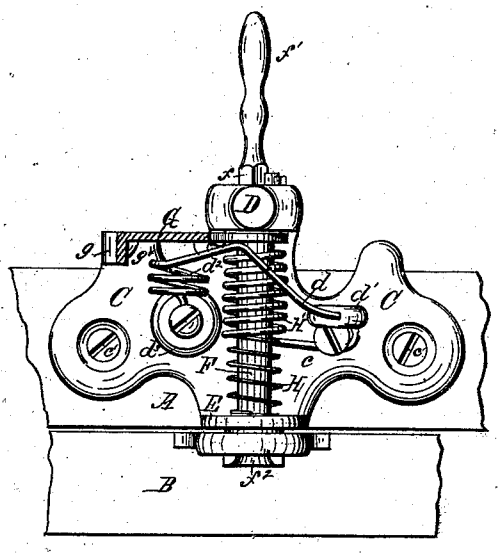

FIG.3.

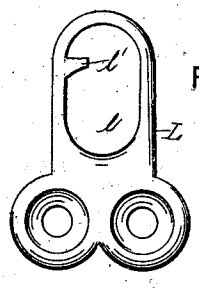

FIG.4.

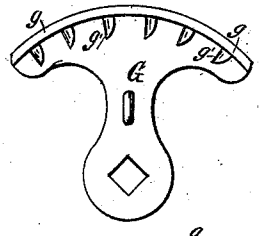

FIG.5.

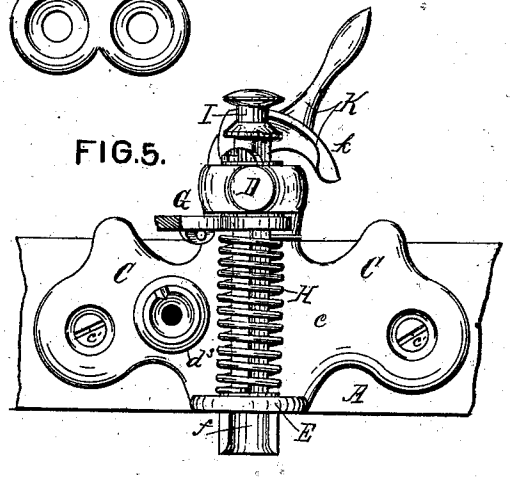

FIG.6.

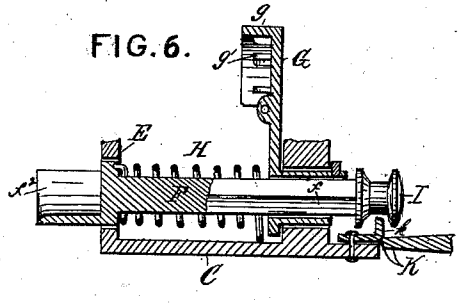

WITNESSES

Colborne Brookes

R. H. Lacey

INVENTOR

George Saurbrey

By R. S. & A. P. Lacey ATTORNEYS.

N. PETERS, PHOTO-LITHOGRAPHER, WASHINGTON, D. C.

UNITED STATES PATENT OFFICE.

GEORGE SAURBREY, OF COLUMBUS, OHIO.

IMPROVEMENT IN BURGLAR-ALARM WINDOW-FASTENINGS.

Specification forming part of Letters Patent No. **194,376**, dated August 21, 1877; application filed August 1, 1877.

To all whom it may concern:

Be it known that I, GEORGE SAURBREY, of Columbus, in the county of Franklin and State of Ohio, have invented certain new and useful Improvements in Burglar-Alarm Window-Fastenings; and I do hereby declare that the following is a full, clear, and exact description thereof, which will enable others skilled in the art to which it pertains to make and use the same, reference being had to the accompanying drawing, and to the letters of reference marked thereon, which form a part of this specification.

My invention relates to an improved fastener and burglar-alarm particularly applicable to securing windows, shutters, and other similar devices, the nature of which will be fully explained by reference to the accompanying drawings, in which—

Figure 1 represents a front view, partly in section; Fig. 2, a plan, also partly in section, and with the bell removed; and Figs. 3 and 4 are detail views of parts of apparatus constructed according to my invention. Fig. 5 shows a plan, partly in section; and Fig. 6, a sectional side view of parts of apparatus, showing a slight modification of my invention.

In each of the views similar letters of reference are employed to denote corresponding parts wherever they occur.

A represents the top bar of the lower sash, and B the bottom bar of an upper sash, of a window.

To the bar A is affixed the main framing C of the device, which, at *c*, is formed flat, and is secured to the bar by means of screws *c'*.

The frame C is provided with a standard, D, the upper end of which is adapted to receive and support the bell or gong D', and also with a bearing-piece, E.

F represents a bolt, which is supported in bearings in such manner that it is capable of a to-and-fro as well as a revolving motion.

Upon the bolt F (which, at *f*, is formed square) is mounted a semicircular disk, G, which is provided with a circumferential rim, *g*, and a series of serrations or projections, *g'*, adapted to engage with and operate the arm *d* of the gong-hammer d^1.

The arm *d* is, by preference, formed on the end of a spring-coil, d^2, which is mounted on a standard, d^3, forming part of the main framing C.

The bolt F at one end is provided with a handle, f^1, and at its opposite end with a semicircular locking-piece, f^2, which, when the bolt is thrown, passes into a recess, *l*, in a plate, L, carried by the bar B.

l' is a projection formed on one side of the recess *l*, the object of which is that, in the event of either of the sashes of a window (with my device applied) being attempted to be raised or lowered without the bolt F being withdrawn, the projection *l'* will immediately come in contact with the semicircular locking-piece f^2, and cause the same to make a partial revolution, and in so doing cause the disk G to also revolve, thereby operating the arm *d* and ringing the gong D' each time a serration or projection, *l'*, passes the arm *d*.

The bolt F is kept forward in a locking position (when not otherwise held by the handle f^1) by means of a spring, H. Around this spring is also arranged a second spring, H', adapted to bring the bolt F and disk G back to their normal position when they have been revolved.

In Figs. 5 and 6 the spring H' is dispensed with, and the spring H is arranged to effect the lateral as well as the rotary motion of the bolt F.

The bolt F, in place of being drawn back by the fingers operating a handle, f^1, is provided with a grooved pulley or extension, I, adapted to engage with a semicircular rim or cam, *k*, formed on or affixed to an arm, K, carried by the frame C.

Having thus described my invention, what I claim, and desire to secure by Letters Patent, is—

1. In a combined fastener and burglar-alarm, a bolt, F, mounted in a framing, C, carried by a bar, A, and provided with a serrated or toothed disk, G, the bolt F and disk G being adapted to be operated by a plate or projection, L, carried by a frame, B, substantially as and for the purpose described.

2. The combination, with a frame, C, provided with a standard, D', arm *d*, and hammer d^1, a bolt, F, having a semicircular locking-

piece, f^2, disk G, and springs H H′, of the locking and operating plate or projection L, substantially as and for the purpose described.

3. The combination, with the bolt F, of the grooved pulley or extension I of the arm K and cam or rim *k*, substantially as and for the purpose described.

In testimony that I claim the foregoing as my own I affix my signature in presence of two witnesses.

GEORGE SAURBREY.

Witnesses:

BENJAMIN KNIPFER,

HERMAN KUEHN.