Feb. 6, 1968 G. J. DEAN, JR 3,367,661

ELECTRICALLY INDICATING TARGET SYSTEM WITH ADJUSTABLY TENSIONED TARGET MEMBER

Filed June 24, 1964 2 Sheets-Sheet 1

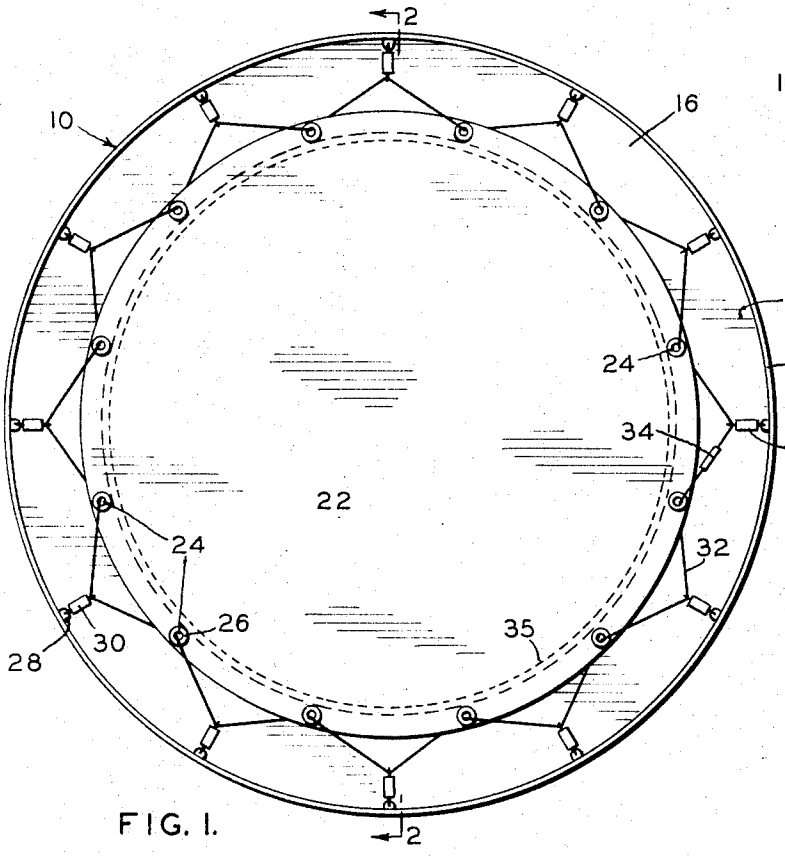


FIG. 1.

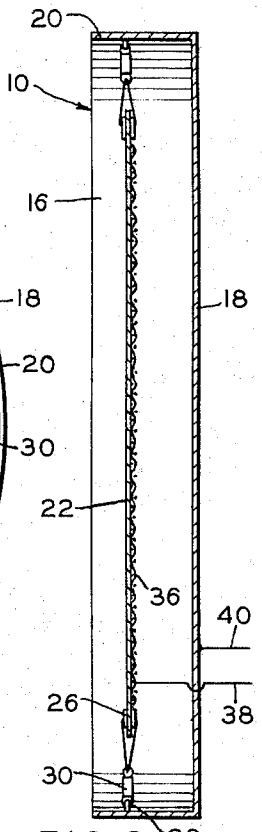


FIG. 2.

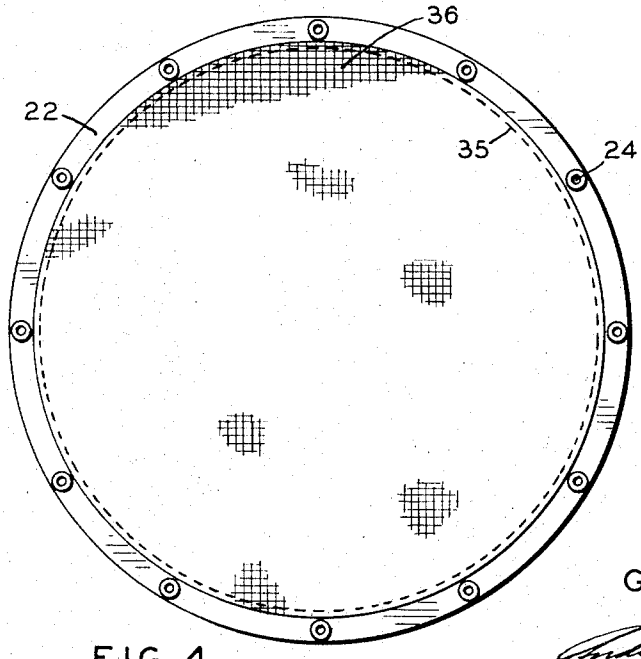


FIG. 4.

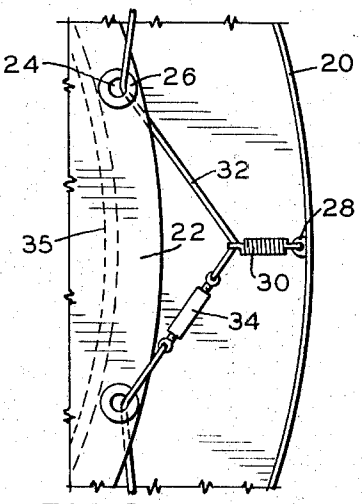


FIG. 3.

INVENTOR.

GEORGE J. DEAN JR.

BY

Anderson, Spangler & Wyman

Feb. 6, 1968 G. J. DEAN, JR 3,367,661

ELECTRICALLY INDICATING TARGET SYSTEM WITH ADJUSTABLY TENSIONED TARGET MEMBER

Filed June 24, 1964 2 Sheets-Sheet 2

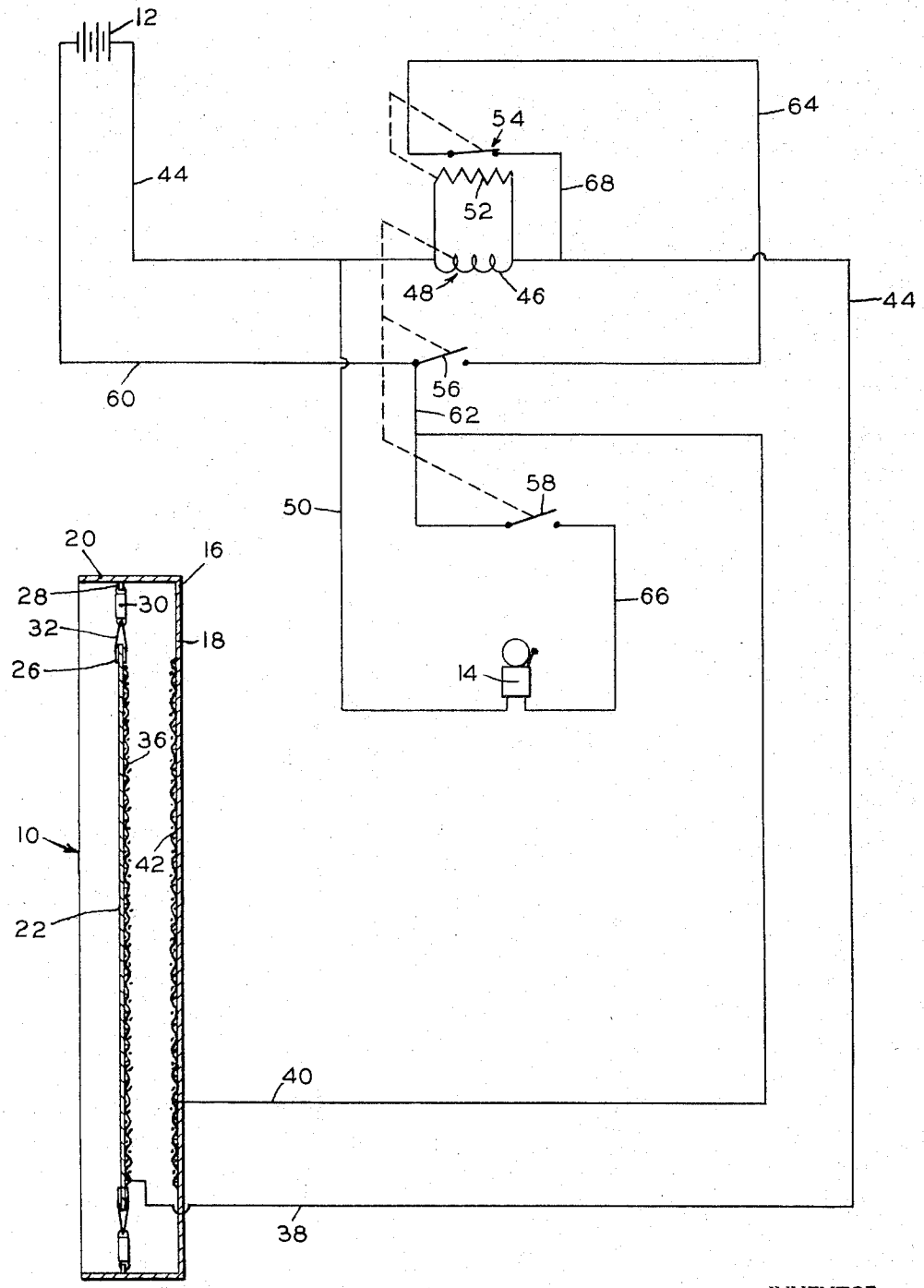


FIG. 5.

INVENTOR.
GEORGE J. DEAN JR.
BY
Anderson, Young & Jamore

United States Patent Office 3,367,661
Patented Feb. 6, 1968



3,367,661

# ELECTRICALLY INDICATING TARGET SYSTEM WITH ADJUSTABLY TENSIONED TARGET MEMBER

George J. Dean, Jr., 5541 Marshall, Arvada, Colo. 80002

Filed June 24, 1964, Ser. No. 377,578
5 Claims. (Cl. 273—102.2)

This invention relates to hit scoring target systems and, more particularly, to a target arrangement therefor which is suited for use as a scoring target on a golf driving range.

Golf driving ranges are quite popular as a form of recreation and exercise since they do not require as much space as the usual golf course nor does the use thereof require the time needed to play a round of golf. In the usual game of golf the player competes with himself and the other players in terms of the number of strokes required to travel around the course. The usual practice at a golf driving range is to play for distance and in certain instances special targets are provided to test the accuracy skills of the players. For the most part, these special targets make no provision for indicating when a hit has been scored but rather, rely on the player to identify a hit by sight. This tends to make the player look at the target prematurely with the result that the player may not keep his head down or develops other bad habits of play. Attempts have been made to provide hit scoring target means for use with outdoor activities but those that provide a sufficient area are usually susceptible to being activated by gusts of wind giving false hits or require the hit to be of such force to be impracticable.

It is a principal object of the present invention to provide a hit scoring target suitable for use on an outdoors golf driving range and the like, which avoids one or more of the disadvantages of prior art devices and is highly efficient.

A further object of the present invention is the provision of an improved hit scoring target system that is completely portable, is of variable sensitivity and not seriously effected by varying wind loads.

A still further object of the present invention is to provide an improved hit scoring target system which will provide any manner of desired indication of a hit being scored, is inexpensive and sturdy of construction and is easily maintained.

In accordance with the present invention, the hit scoring target system includes a target means having a hit receiving portion thereof forming an electrical contact of a switch means and another portion thereof forming another contact of the switch means, an alarm circuit having a power source and an alarm device and means connecting the power source with the alarm device including the switch means of the target means which switch means is adapted to complete an electrical path between the power source and the alarm means in response to the scoring of a hit on the target.

For a better understanding of the present invention, together with other and further objects thereof, reference is had to the following description taken in connection with the accompanying drawing and its scope will be pointed out in the appended claims.

In the drawing:

FIGURE 1 is a view in elevation of the target arrangement of the invention;

FIGURE 2 is a view along line 2—2 of FIGURE 1;

FIGURE 3 is a view to enlarged scale, with parts broken away to conserve space of the detail of securing the target to the target holder;

FIGURE 4 is a rear view of the target; and,

FIGURE 5 is a side elevational view in cross-section of another embodiment of the target arrangement and a circuit diagram of the scoring system.



Referring now to the drawings and, in particular, to FIGURE 5, the hit scoring alarm system is seen to comprise a target arrangement **10**, a power supply **12** and an alarm device **14**, wherein a hit on target arrangement **10** serves to complete an electrical circuit connecting the power supply and the alarm device to energize same and give an indication of a hit being scored.

Reference is now had to the target arrangement and a detailed description thereof since this constitutes the single most important element of the scoring system. The target **10** is seen to comprise a target holder **16** which may conveniently be made of metal and is shown to have a circular bottom **18** with an upstanding circular sidewall **20** to define a pan-like structure. A target **22** of flexible materials such as vinyl plastic, nylon and the like is supported from the sidewalls **20** in spaced relation to the bottom **18** of the target holder. The target is provided with a series of holes **24** arranged in spaced relation around the peripheral extremities thereof. As best seen in FIGURE 3 the holes may be provided with metal grommets **26** for strength. A plurality of lugs **28** are positioned around the inside of the sidewall of the holder **16** in uniform spaced relation and a spring **30** is supported by each lug. A cord **32** of nylon and the like is passed through each hole **24** in the target **22** and through each adjacent spring **30**. The ends of cord **32** are connected with a turnbuckle **34** and the like, adapted to place the cord and the attached target under tension supported in spaced relation and electrically insulated from the target holder **22**.

To the back of target **22** is fastened in suitable manner, such as stiching **35**, a piece of wire cloth **36** of copper or other good electrical conductor. The wire cloth may conveniently be sewn to the target. As will be seen in FIGURE 2 and FIGURE 5, the wire cloth **36** is positioned in opposed relation to the bottom **18** of the target holder **16**. The wire cloth or screen **36** is seen to form one contact of an electrical switch and a conductor **38** is connected thereto for connection into a hit scoring circuit. Another conductor **40** is connected to the bottom **18** for connection to a hit scoring circuit. In FIGURE 5 another piece of wire cloth **42** is fastened to bottom **18** in opposed relation to wire cloth or screen **36** fastened to target **22**. Screens **36** and **42** constitute the contacts of a switch arrangement.

Referring now to FIGURE 5, a suitable hit scoring circuit is shown to include a power supply **12** which may be a battery or where line voltage is available this may be used or transformed to a lower voltage. One side of the power supply is seen to be connected to screen **36** via conductors **44** and **38** and serially through the operating coil **46** of relay **48**. One side of the power supply is also connected to one side of an alarm device **14** via conductor **44** and **50**. The heater or operative element **52** of another relay **54** is connected in parallel with the operating coil **46** of relay **48**. The relay **48** is provided with a pair of switches **56** and **58** to provide a double pole-single throw switching arrangement. The poles of switches **56** and **58** are connected to the other side of power supply **12** via conductors **60** and **62** and screen **42** is also connected to the other side of power supply **12** via conductors **40**, **62** and **60**. Relay **54** is provided with a single pole-single throw switch and the pole thereof is connected to the contact of switch **56** of relay **48** via conductor **64**. The contact of switch **58** of relay **48** is connected to the other side of the alarm device **14** via conductor **66**. Relay **54** may conveniently be of the delay action type as will be explained.

In operation, when an object, such as a golf ball, strikes the target **22**, the screen **36** makes contact with either the bottom **18** of the target holder **16** or screen **42** attached

thereto, completing an electrical path through conductors 38 and 40. This completes an electrical path from the power source 12, through conductor 44 and the operating coil 46 of relay 48, conductor 38, screen 36, screen 42, conductor 40, and conductors 62 and 60 back to the power supply. On energizing the operating coil 46, relay 48 effects a closure of switches 56 and 58. When switch 58 closes, the power supply is connected to the alarm device 14 via conductors 44 and 50 and back to the power supply through conductor 66, switch 58, conductor 62 and conductor 60, energizing the alarm device. When the target is hit, it is desirable to keep the alarm device energized for a short interval but longer than the momentary contact of screens 36 and 42. For this purpose, a delay action relay 54 is provided having a pair of switch contacts that are normally closed. When relay 48 is energized, a holding circuit is completed from power supply 12 and conductor 60 through switch 56, conductor 64, normally closed switch of relay 54, conductor 68, through operating coil 46 of relay 48 and heater 52 of relay 54 in parallel with coil 46 and conductor 44 back to the power supply. When switch 56 closes, relay 48 is held in via the above circuit. However, heater 52 of relay 54 is energized and opens the switch of relay 54 after a predetermined time interval. Thus, when a hit is scored, the alarm device is energized and remains energized for a predetermined time interval to signal the hit.

Perhaps the most important single part of the present invention is the target arrangement. The hit receiving target for most efficient operation must be of flexible material such as a vinyl plastic material similar to that used on convertible automobile tops. The nylon cord 32 in conjunction with the turnbuckle 34 permits the tension on the target to be selectively adjusted to suit a particular set of conditions. With this arrangement, it is possible to adjust the tension on the target, to permit a golf ball to be tossed, not thrown, from a distance of about 6 feet and register a hit, while strong wind gusts will not set off the alarm device. This has been practically impossible to achieve with other devices which when a target of sufficient size to be useable is provided which will respond to the impact of a tossed golf ball, is also sufficiently sensitive to wind loads to give erroneous hit indications.

While there have ben described what at present are considered to be the preferred embodiments of this invention, it will be obvious to those skilled in the art that various changes and modifications may be made therein without departing from the invention. It is aimed, therefore, in the appended claims to cover all such changes and modifications which fall within the true spirit and scope of the invention.



What is claimed is:

1. A target system comprising a flexible planar target member, a target holding means having a bottom which is electrically conducting provided with upstanding sidewall portions, the target member being peripherally supported in tension from the sidewall in spaced parallel relation to the bottom of the target holding means by a cord connected in a uniformly spaced relation to the periphery of said target member and attached in a uniformly spaced relation to said sidewall portion, the end of said cord having a turnbuckle attached thereto to insure proper tension of said target member and said cord, said target member having a layer of electrical conducting material attached to the surface opposite the bottom of the target holding means adapted to make momentary electrical contact with said bottom when a hit is received by said target to complete an electrical circuit connected between said target member and said target holding means thereby constituting a target switch means.

2. A target system according to claim 1, including an alarm device and a power supply and means connecting the alarm device to the power supply on closure of the target switch means including means for holding the connection for a predetermined period of time after closure of the target switch means and to release the connection automatically after the predetermined time.

3. The target system of claim 1 wherein the electrical conducting material of the target means consists of wire cloth.

4. The target system of claim 1 wherein the bottom of the target holding means includes a piece of wire cloth.

5. A target system as defined in claim 1 wherein the said cord connecting said target member to said target holding means has each respective end thereof attached to said turnbuckle which is adapted to place the said cord and attached target means under tension in a spaced relationship from the target holding means.

**References Cited**

UNITED STATES PATENTS

| | | | |
|---|---|---|---|
| 1,142,184 | 6/1915 | Lawrence | 273—102 X |
| 2,107,211 | 2/1928 | Pavelka | 273—102.2 |
| 2,320,347 | 6/1943 | Brosseau et al. | 273—118 X |
| 2,370,990 | 3/1945 | Nissen | 272—65 X |
| 2,743,929 | 5/1956 | Smith | 273—102.2 X |
| 2,487,871 | 11/1949 | Havey | 273—102.2 |

ANTON O. OECHSLE, *Primary Examiner.*

M. R. PAGE, *Assistant Examiner.*