United States Patent

[11] 3,627,388

[72] Inventors Lewis C. Jennings
Worcester;
Robert W. Tappin, Boylston; Samuel S. Rickley, West Boylston, all of Mass.

[21] Appl. No. 70,445
[22] Filed Sept. 8, 1970
[45] Patented Dec. 14, 1971
[73] Assignee Morgan Construction Company
Worcester, Mass.

[54] **HYDRAULIC LOCKING AND LOOSENING DEVICE FOR BEARING**
7 Claims, 6 Drawing Figs.

[52] U.S. Cl. 308/37
[51] Int. Cl. F16c 17/02
[50] Field of Search 308/70, 37, 36, 236

[56] **References Cited**
UNITED STATES PATENTS
2,018,055 10/1935 Dahlstrom 308/70

Primary Examiner—Martin P. Schwadron
Assistant Examiner—Frank Susko
Attorney—Chittick, Pfund, Birch, Samuels & Gauthier

ABSTRACT: In the art of rolling metals, dual hydraulically actuated mechanism which is an integral part of a bearing structure for forcing the bearing tightly on the neck of a roll, positively maintaining the bearing in position during the rolling operation, and subsequently utilizing the same dual hydraulically actuated mechanism which is also integral with the bearing for removing the bearing from the roll neck.

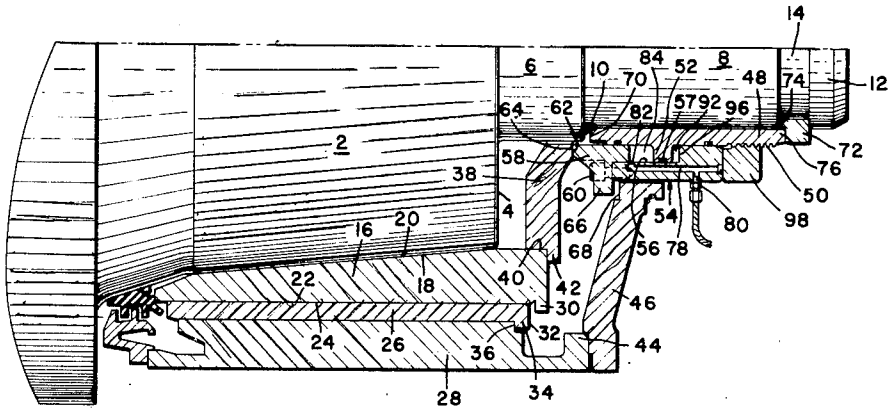

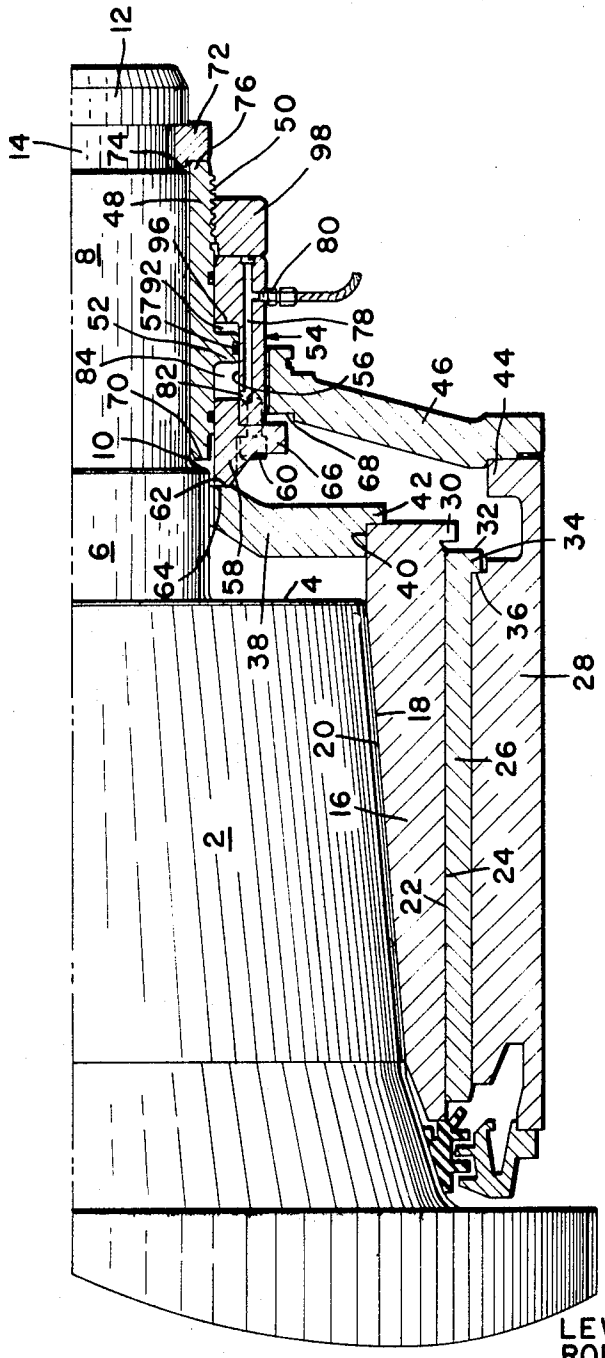

FIG. 1

INVENTORS
LEWIS C. JENNINGS
ROBERT W. TAPPIN
BY SAMUEL S. RICKLEY
Shattick, Pfund, Birde, Samuels & Gauthier
ATTORNEYS

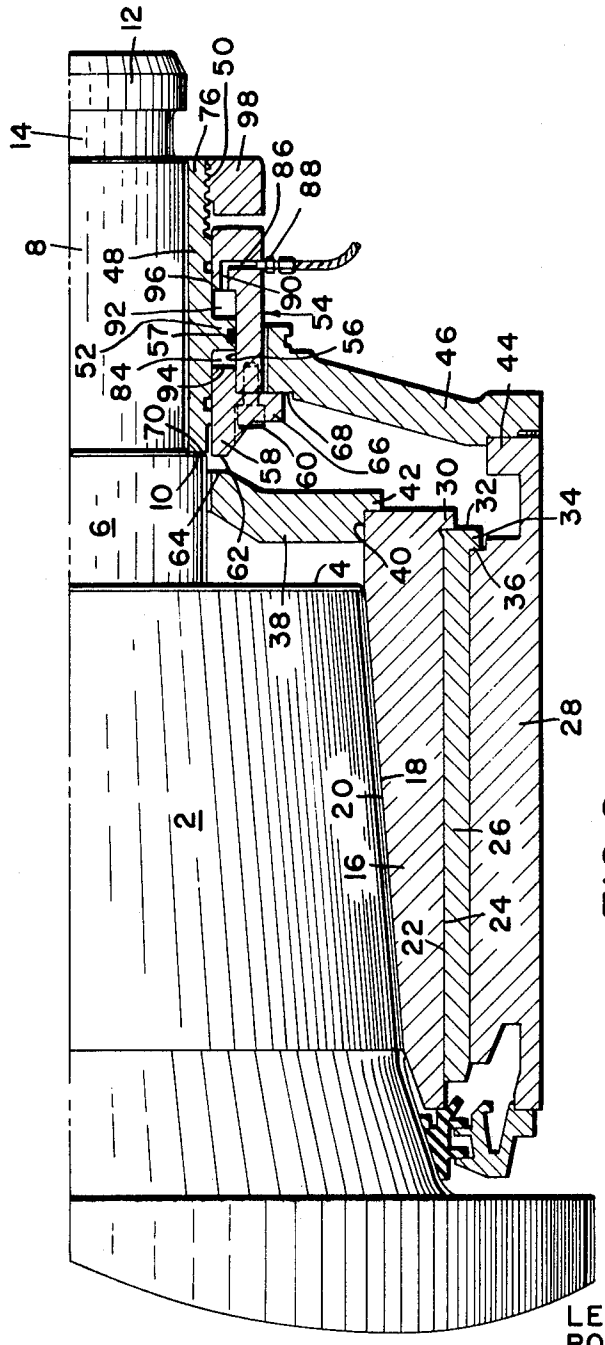

FIG. 2

INVENTORS
LEWIS C. JENNINGS
ROBERT W. TAPPIN
BY SAMUEL S. RICKLEY
Clattick, Pfund, Birch, Samuels & Gauthier
ATTORNEYS

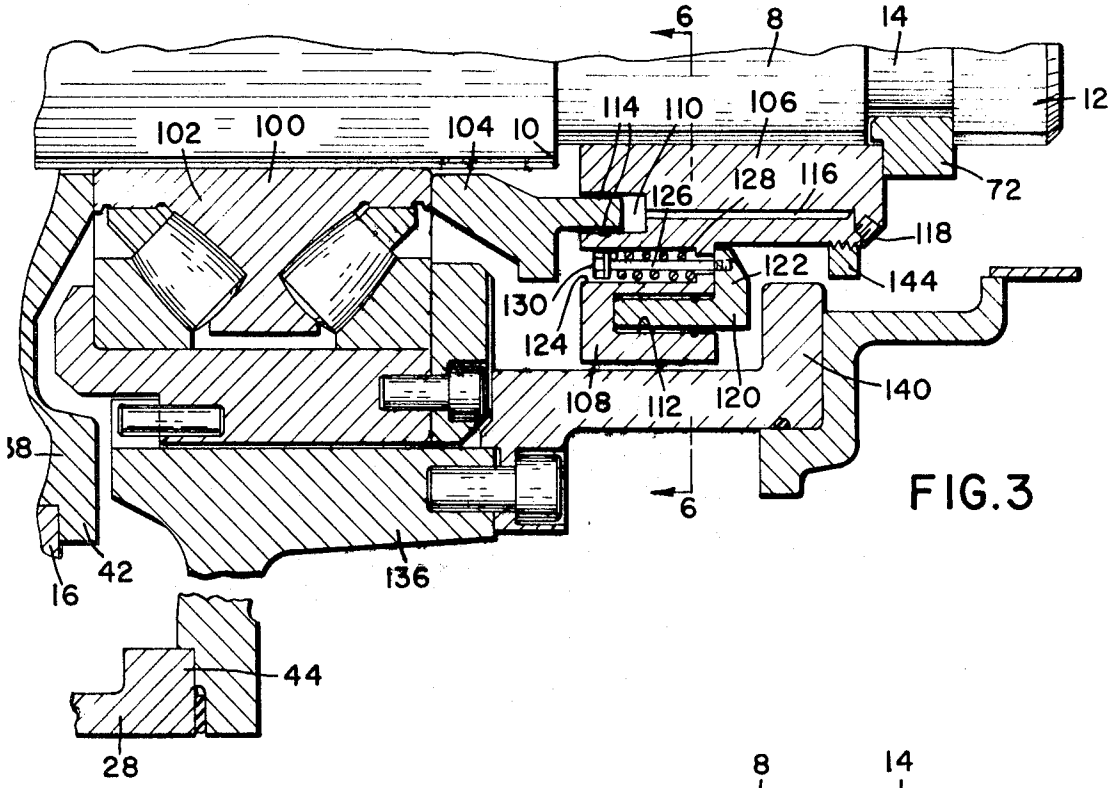

FIG.3

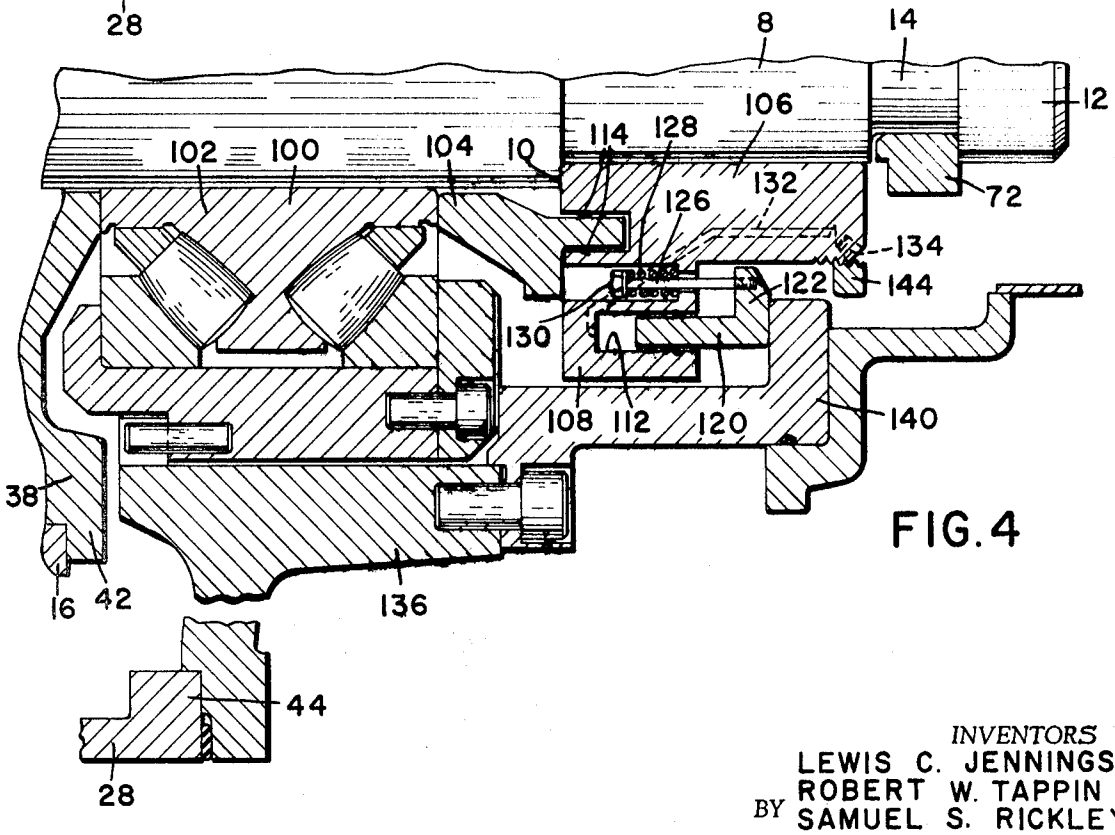

FIG.4

INVENTORS
LEWIS C. JENNINGS
ROBERT W. TAPPIN
BY SAMUEL S. RICKLEY
Clattick, Pfund, Birch, Samuels & Gauthier
ATTORNEYS

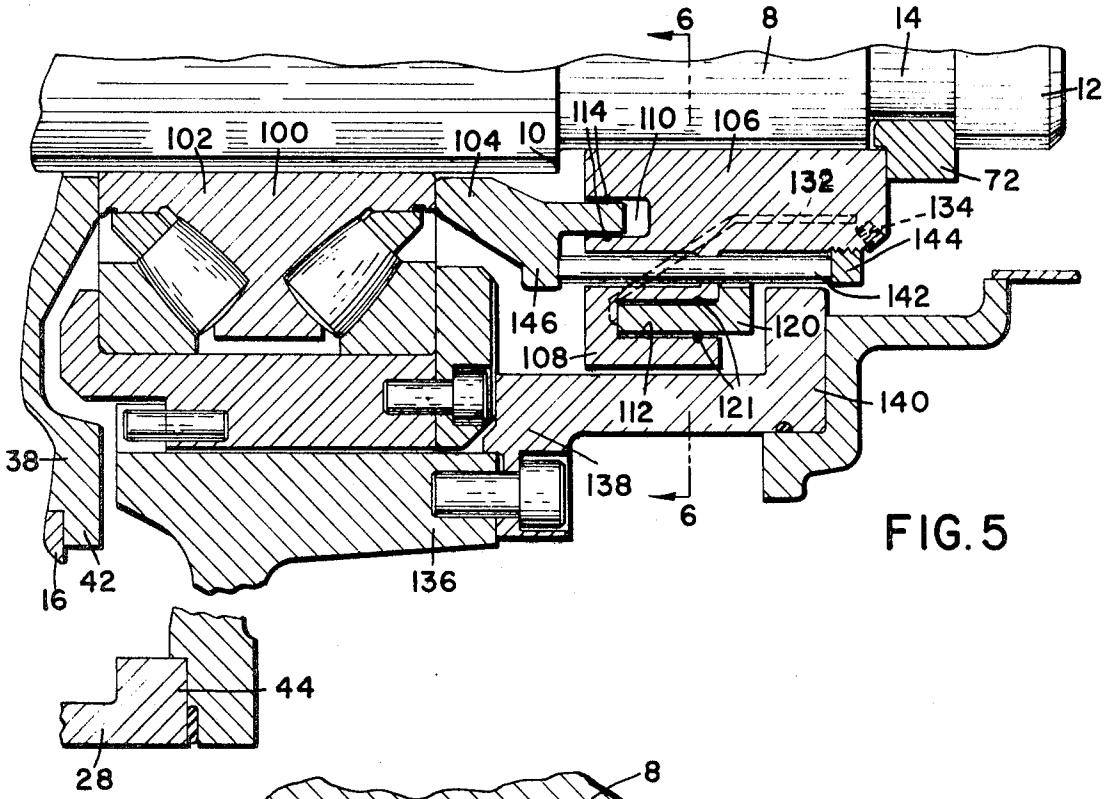

FIG. 5

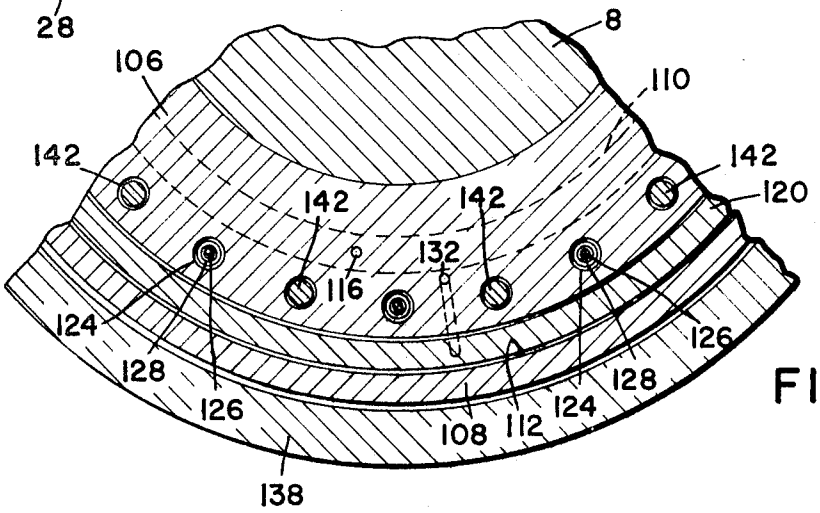

FIG. 6

INVENTORS
LEWIS C. JENNINGS
BY ROBERT W. TAPPIN
SAMUEL S. RICKLEY
Chittick, Pfund, Birch, Samuels & Gauthier
ATTORNEYS

HYDRAULIC LOCKING AND LOOSENING DEVICE FOR BEARING

BACKGROUND OF THE INVENTION

In the art of rolling material (ordinarily metal) to reduce the cross-sectional dimension, it is customary to mount the ends of the rolls in independent bearing structures. Thus, when a roll needs to be changed, the bearings carrying such rolls preferably are removed therefrom and then utilized on another roll. The bearings have taken various forms, such as the oil film bearing shown and described in the patent to Dahlstrom, U.S. Pat. No. 2,018,055, or that illustrated in the patent to Morgan et al. U.S. Pat. No. 2,654,642 in which the lubricant is water. Other types that have been used are ball or roller bearings. One of the problems present, regardless of the particular type of bearing that has been used, is that of having easily operable mechanism capable of forcing the bearing tightly on the roll neck, holding it in secured position during the operation of the roll and other mechanism capable of pulling the bearing free from the roll neck when the roll is being changed.

One means for accomplishing this result is shown in the patent to Rickley, U.S. Pat. No. 3,080,199. In this patent, the roll neck on which the bearing is positioned is tapered. Screw-threaded mechanism is associated with an extension of the roll neck and by turning a large nut pressure is brought against the inner sleeve of the bearing to force it tightly on the tapered roll neck. When the nut is rotated in the opposite direction, a pulling force is exerted on the outer bearing housing which force is in turn applied to the inner sleeve causing the sleeve to be dislodged. The bearing and the applying and removing mechanism is an integral unit which can be removed in its entirety from the roll neck and then applied to another roll.

Johnson U.S. Pat. No. 3,108,839 shows hydraulically actuated means for removing a roller-type bearing from a cylindrical roll neck.

Cook U.S. Pat. No. 3,361,498 shows hydraulic mechanism interposed between the roll proper and the tapered roll neck for removing a roller bearing.

Toth et al. U.S. Pat. No. 3,304,139 shows hydraulic means for forcing a bearing on a tapered roll neck, screw-threaded means for holding the bearing in place, and other hydraulically actuated means for removing the bearing.

In all of the foregoing examples, however, the hydraulic means for applying and removing the bearing is independent of the bearing, so that when the bearing is removed, the hydraulic mechanism must be handled separately.

The present invention is distinguished from the prior art in the following respects:

1. All of the structure utilized in the two hydraulic systems remains in place after the bearing has been applied and during the operation of the roll.
2. The hydraulic mechanism is interconnected with the bearing in such manner that when the bearing is removed the hydraulic mechanism remains connected therewith so that the bearing unit is ready for immediate use with a new roll.
3. The means for locking the bearing in place after it has been hydraulically forced into position is also an integral part of the unit requiring separate application or removal.
4. The hydraulic system comprises two cylindrical cylinders and two corresponding cylindrical pistons all of which are part of the same mechanism which is applied to and held in position on the extension of the roll neck.
5. The hydraulic system may be used to apply and remove a bearing from a cylindrical roll neck or a tapered roll neck.
6. The construction is especially suitable for use with a bearing of the oil film type mounted on a tapered roll neck but is not limited thereto.

BRIEF DESCRIPTION OF THE DRAWINGS

FIG. 1 is a vertical section showing one form of the invention used with an oil film bearing on a tapered roll neck. The parts are shown in the bearing-applying position.

FIG. 2 is similar to FIG. 1 except that the hydraulic system is shown in the bearing removal position.

FIG. 3 shows an alternative form of the invention with the parts in bearing-applying position.

FIG. 4 is a view similar to FIG. 3 showing the parts in bearing removal position.

FIG. 5 is a view similar to FIG. 3 but rotated 15° therefrom to illustrate the locking means.

FIG. 6 is a fragmentary vertical section taken on the line 7—7 of FIGS. 4 and 5 to illustrate the position of the locking pins and piston retracting pins and springs.

DESCRIPTION OF THE PREFERRED EMBODIMENTS

Referring to FIGS. 1 and 2, the hydraulic positioning and removing mechanism is shown in conjunction with an oil-film-type bearing mounted on a tapered roll neck. The roll neck 2 of the roll terminates at a shoulder 4 and from this shoulder runs an extension 6 with a further extension 8 of reduced diameter to create a shoulder 10. Near the end 12 of extension 8 is a groove 14.

The oil film bearing comprises an inner sleeve 16 tapered as at 18 to fit exactly on the tapered surface 20 of roll neck 2. Sleeve 16 has an outer cylindrical bearing surface 22 which makes sliding engagement with the interior surface 24 of the fixed bushing 26. Bushing 26 is in turn mounted in a fixed chock 28. By well-understood mechanism, oil is continuously supplied to the relatively moving bearing surfaces 22 and 24.

It will be noted that sleeve 16 has a circumferential end flange 30 large enough to be engaged by the end 32 of bushing 26. Likewise, bushing 26 has a circumferential end flange 34 which is engaged by the end portion 36 of chock 28.

Within the overhanging end of sleeve 16 is a sleeve ring 38 which fits tightly as at 40. A circumferential flange 42 overlaps the end of sleeve 16. At the end of chock 28 is a circular extension 44 to which is bolted a chock ring 46.

From the description thus far, it will be appreciated that if force is applied to sleeve ring 38 in the direction of roll neck 2, the sleeve 16 will be forced onto the tapered surface 20 of roll neck 2. Conversely, if force is applied to chock ring 46 in a direction away from roll neck 2, then a removing force will be applied to sleeve 16 through the interaction of surface 36 with flange 34 and surface 32 with flange 30.

The hydraulic mechanism used to apply selectively these two oppositely directed forces to the sleeve 16 will now be explained.

The extension 8 has mounted thereon in closely fitting relation a collar 48. This collar is threaded for a limited distance as at 50 and has about its circumference a substantial flange 52. Mounted on collar 48 is a circular piston generally referred to at 54 which has an interior circumferential groove 56 of longitudinal dimension substantially greater than the thickness of flange 52. The wall of groove 56 fits closely about flange 52. The space between is sealed by O ring 57. The left-hand end of the piston 54 indicated at 58 is removable from the piston body to permit assembly or disassembly but normally is held in fixed relationship by a plurality of bolts 60 spaced about the circumference of the circular end element 58. The dimension of element 58 at its end, as at 62, is such that it may engage directly the face 64 at the inner periphery of sleeve ring 38. The outer circumferential flange 66 of element 58 is of such dimension as to engage directly against face 68 about the inner periphery of chock ring 46.

From this description, it will be apparent that if piston 54 is moved to the left it will engage sleeve ring 38. If piston 54 is moved to the right, flange 66 will engage chock ring 46.

Movement of collar 48 to the left is limited by the engagement of the end 70 with shoulder 10. Movement of collar 48 to the right, is limited by its engagement with a clamp ring 72 which is positioned in groove 14. Clamp ring 72 may be made in any convenient way such as for example two semicircular sections bolted together at opposite positions, or in the form of two semicircular sections hinged together with the abutting free ends secured. A suitable construction is shown in the

patent to Rickley, U.S. Pat. No. 3,080,199 above referred to. Clamp ring 72 has a shoulder 74 of such dimension as to fit within the end 76 of collar 48. Thus, when collar 48 is in overlapping engagement with clamp ring 72, as shown in FIG. 1, removal of the clamp ring 72 is prevented.

The body of piston 54 contains a first passageway 78 (see FIG. 1) which leads from a hydraulic connection 80 to a transverse passage 82 that feeds into the circumferential space 84.

A few degrees away from passageway 78 is a second passageway 86 (see FIG. 2) leading from hydraulic connection 88 to a passage 90 feeding into the circular space 92.

The circular spaces 84 and 92 are hereinafter referred to as circular cylinders and the face 94 of piston 54 constitutes one piston cooperating with cylinder 84, and face 96 of piston 54 constitutes a second piston that cooperates with cylinder 92.

The construction thus far described presents two circular cylinders 84 and 92 and two cooperating circular pistons 94 and 96. Cylinder 84 may receive hydraulic fluid under pressure via connection 80, and cylinder 92 may receive hydraulic fluid under pressure via connection 88.

When the bearing and related elements are to be applied to a roll, the clamp ring 72 will be temporarily removed as illustrated in FIG. 2. The sleeve 16 is then directed to a position on roll neck 2, and the collar 48 is guided so as to be placed on extension 8. Since collar 48 is substantially the same length as extension 8, it may initially assume the position shown in FIG. 2 after which the clamp ring 72 may be placed and secured in position in groove 14. The locknut 98 will at this time be in partially unscrewed position as shown in FIG. 2. Hydraulic fluid is then fed to cylinder 84 through hose connection 80. This drives wall 52 to the right causing end 76 of collar 48 to engage against clamp ring 72. Addition of further fluid into cylinder 84 drives piston 54 to the left causing the end 62 of element 58 to engage sleeve ring 38 which, as it moves to the left, as in FIG. 1, forces the sleeve 16 tightly on the tapered surface 20. As soon as the sleeve 16 is set up tight on the tapered roll neck, then the locknut 98 is screwed up to the position shown in FIG. 1 where it engages piston 54 and prevents any subsequent movement to the right of sleeve ring 38 and bearing sleeve 16. The hose connection at 80 is separated. The roll may then be placed in operation with assurance that the bearing is in secured position on the roll neck.

When the roll has been removed from the roll housing for repairs or changing, and the bearing is to be removed from the roll neck, the following procedure is followed:

First, the locknut 98 is loosened and unscrewed a substantial distance, as illustrated in FIG. 2. Then hydraulic fluid under pressure is fed to cylinder 92 via hydraulic line 88. This causes flange 52 and collar 48 to move to the left until the end 70 abuts against shoulder 10. The right-hand end 76 of collar 48 is then clear of clamp ring 72 which is removed from groove 14. Continued feeding of hydraulic fluid to cylinder 92 causes piston 54 to move to the right and the flange 66 engages surface 68 of chock ring 46 which causes movement to the right of fixed chock 28 and bushing 26 so that the end 32 of bushing 26 engages circumferential flange 30 of sleeve 16. Continued movement of piston 54 to the right then pulls sleeve 16 free of the tapered surface 20 of roll neck 2.

As soon as sleeve 16 has been loosened in this manner, the hose connection is removed at 88 and the entire bearing unit and the related circular cylinders and pistons are then slid as a unit off the end of the roll.

During normal operation of the roll, the chock ring 46, which is stationary, is completely out of engagement with any part of the piston 54 which, of course, rotates with the extension 8 on which it is mounted (see FIG. 1).

From the foregoing description, it will be understood that the hydraulic-force-applying mechanism is held in connected relationship between sleeve ring 38 and chock ring 46. The locknut 98 is always in position on the threaded portion 50 of collar 48. Thus in the shifting of the bearing from one roll to another there is no chance of any of the parts other than the clamp ring 72 being mislaid or misfitted. An extra supply of rings 72 can always be available.

A second species of the invention is shown in FIGS. 3, 4, 5 and 6. The main distinction of this species over the one shown in FIGS. 1 and 2 is that the cylindrical cylinders and pistons are of unequal diameters and the two pistons are made in separate parts instead of being integrally formed as in FIGS. 1 and 2. These differences will be explained in detail as the description proceeds.

In FIG. 3 there is shown an intermediate thrust bearing 100 the inner race 102 of which transmits the bearing applying force from piston 104 to the sleeve ring 38. The intermediate element 102 in no way changes the operativeness of the bearing-applying device.

The hydraulic cylinder and piston mechanism in FIGS. 3, 4, 5 and 6 comprise a circular collar 106 mounted on extension 8 the same as collar 48 in FIG. 1 was mounted on extension 8. The length of collar 106 is such as to permit sufficient movement to the left against shoulder 10 so that clamp ring 72 can be removed from circular groove 14 prior to removal of the bearing unit from the roll (see FIG. 4).

Collar 106 is of greater radial dimension at that part toward the roll neck as indicated at 108. Collar 106 contains an inner circular cylinder 110 facing the roll and an outer circular cylinder 112 facing away from the roll. Positioned in cylinder 110 is the circular piston 104. Large "O" rings 114 are used as seals. A passageway 116 as shown in FIG. 3 extends from cylinder 110 to the end of the collar where convenient hydraulic connection can be made at 118.

A second cylindrical piston 120 is located in the outer cylinder 112. Large "O" rings 121 act as seals. This piston has an L-shaped end 122. A plurality of holes 124 (see FIGS. 3, 4 and 6) formed in the outer part 108 of collar 106 contain headed pins 126 which at their ends are screwed into the angular extension 122 of piston 120. Each pin 126 is surrounded by a compression spring 128 which engages the end wall of hole 124 and the head 130 of pin 126. The effect of the plurality of compressed springs 128 is to hold the piston 120 in retracted position within cylinder 112 as shown in FIG. 3.

As can be seem in FIGS. 4, 5 and 6, a second passage 132 an angular distance away from passage 116 leads to cylinder 112. Suitable connection for a hydraulic supply is provided at 134 at the entrance to passage 132.

The fixed chock 28 shown in FIGS. 1 and 2 is connected to the circular intermediate element 136 to which is bolted another circular extension 138. This extension has an inwardly turned flange 140 adapted to be engaged by the piston 120.

The operation of the device just described is as follows. To force the bearing tightly on the roll neck, fluid under pressure is fed through passageway 116 into circular cylinder 110. This causes collar 106 to move to the right as viewed in FIGS. 3 and 5 to engage against clamp ring 72. Piston 104 moves to the left pressing against inner race 102 of thrust bearing 100. Inner race 102 in turn engages sleeve ring 38 (shown also in FIGS. 1 and 2) which in turn forces bearing sleeve 16 into tight engagement with the tapered surface 20 of roll neck 2.

With the bearing tightly in position, it is locked there through the use of a plurality of locking pins 142 (see FIGS. 5 and 6). These pins, preferably 12, are spaced at 30° about the body 108 of collar 106. A locking ring 144 threaded on the right-hand end of collar 106 is rotated to move to the left forcing all of the pins 142 against a radial flange 146 of piston 104. In this way, the bearing is held tightly in position after the hydraulic pressure in cylinder 110 is removed.

When the bearing is to be removed from the roll neck, the following procedure is followed. First, the locking ring 144 is unscrewed to an extent permitting the locking pins 142 to be retracted within the body 108 to eliminate the pressure against piston 104. Hydraulic fluid under pressure is then fed through passageway 132 into cylinder 112. This forces collar 106 to the left against shoulder 10 and forces piston 120 to the right into engagement with the flange 140, driving the circular extension 138 to the right (see FIG. 4). This in turn moves to the right the circular element 136 and the fixed chock 28 to which element 136 is attached. Fixed chock 28 as shown in FIG. 2 engages bushing 26 which in turn engages flange 30 of sleeve

16 so that upon sufficient movement of piston 120 sleeve 16 will be dislodged. Then, upon removal of clamp ring 72, the entire bearing unit, which would include in this case the thrust bearing 100 and all of the hydraulic force applying mechanisms, can be removed as a unit from the roll neck.

The fragmentary vertical cross section shown in FIG. 6, which is a section taken on line 7—7 of FIGS. 3 and 5, illustrates the alternating arrangement of the locking pins 142 and the retracting pins 126 and related springs 128.

All parts of the push-pull mechanism remain in place on the roll neck during operation of the rolling mill. All parts of the push-pull mechanism, being interlocked with the bearing, remain with the bearing when the unit is removed from the roll neck. The push-pull mechanism of either of the two species illustrated may be used without inclusion of thrust bearings as in FIGS. 1 and 2 or with thrust bearings as in FIGS. 3, 4 and 5.

It is intended to cover all changes and modifications of the examples of the invention herein chosen for purposes of the disclosure which do not constitute departures from the spirit and scope of the invention.

I claim:

1. The combination of a roll having a roll neck and extension therefrom and a unitary bearing structure, said structure comprising a rotatable inner member and a stationary outer member, a collar dimensioned to fit on said roll neck extension and rotatable therewith, means permitting limited movement of said collar axially in either direction on said extension, said collar having associated therewith first and second circular cylinders and first and second cooperating circular pistons adapted to coact with said cylinders, means for supplying hydraulic fluid under pressure selectively to one or the other of the circular cylinders, the first circular piston when actuated by said fluid adapted to apply axial force through intermediate means in one direction against the inner member of said bearing structure, the second circular piston when actuated by said fluid adapted to apply axial force through other intermediate means in the other direction to the outer member of said bearing structure, and additional means for locking said inner bearing member in the extreme position to which it may be moved on said roll neck by said first circular piston, said additional means comprising means associated with said collar and movable in the direction of said inner bearing member for applying an axially directed force to said intermediate means and said inner bearing member, whereby when said collar associated means is moved in the direction of said inner bearing member, said intermediate means will press against said inner bearing member to hold the latter against movement toward said collar, and interengaging but relatively rotatable means between the said inner and outer members of said bearing structure whereby when said locking means is released and said second circular piston is actuated to move said outer member in the said other direction with respect to said collar, said inner bearing member will also be moved toward said collar along said roll neck, all of the foregoing elements being in position on said roll neck during operation of said roll and all of the foregoing elements being interengaged with each other in such manner that when said bearing structure is removed from said roll neck, all elements will remain together as an integral unit.

2. The combination of a roll having a roll neck with an extension therefrom and a unitary bearing structure which includes hydraulically actuated means for forcing said bearing tightly on said roll neck and other means for forcing said bearing free of said roll neck, said structure comprising an interior bearing element which engages and rotates with said roll neck and an outer stationary bearing element with bearing surfaces therebetween, a first cylindrical collar on said extension, means permitting limited axial movement of said collar on said extension, said limiting means comprising a shoulder adjacent said roll neck and removable means affixed to the free end of said extension, said collar having an exterior circular flange located intermediate its ends, a nut threaded on said collar at its outer end, a piston in the form of a second circular collar closely fitting on said first collar and having a cylindrical interior groove whose axial length is substantially greater than the width of said flange, the interior wall of said groove slidingly engaging the exterior surface of said flange, sealing means between the ends of said first and second collars and between said flange and interior groove wall, a first passageway in said second collar for introducing hydraulic fluid into the circular space on the roll neck side of said flange to force said first collar against said removable means and said second collar toward said roll neck, means interposed between said second collar and interior bearing element whereby movement of said second collar toward said roll neck will force said interior bearing element tightly onto said roll neck, said nut being adapted to be screwed along said first collar to a position against said second collar to hold the later in its advanced position against said interposed means, a second passageway in said second collar for introducing hydraulic fluid into the other circular space on the other side of said flange to force said first collar against said shoulder and said second collar away from said roll neck after said nut has been unscrewed on said first collar away from its position against said second collar, interlocking means axially connecting but permitting relative rotation of said second collar with said outer stationary bearing element and means on said outer stationary bearing element for engaging said interior bearing element whereby axial movement of said second collar away from said roll neck after said first collar has engaged said shoulder will exert a force on said interior bearing element to free it from said roll neck, said bearing structure, first collar and second collar and related parts comprising a unit which is in position on said roll neck during operation of said roll and which may be removed from said roll neck and extension as an integral unit after removal of said removable means from the end of said extension.

3. The structure as set forth in claim 1, said means permitting limited motion of said collar on said extension comprising a shoulder on said extension between said collar and roll neck engageable by one end of said collar and a removable ring on said extension engageable by the other end of said collar.

4. The structure as set forth in claim 1, the second of said circular cylinders and its circular piston being of greater diameter than the first circular cylinder and piston with a circular wall therebetween, said intermediate means comprising a plurality of elements extending through apertures in said wall.

5. The structure as set forth in claim 4, and spring-loaded means extending through apertures in said wall and attached to said second piston to maintain said second piston normally in retracted position free of engagement with said other intermediate means.

6. The structure as set forth in claim 2, said second collar being made of two circular pieces separably secured together, that piece nearer said roll neck acting upon operation of said second collar toward said roll neck to engage said interposed means, and upon operation of said second collar away from said roll neck to engage said interlocking means.

7. The structure set forth in claim 2, said interlocking means comprising a chock ring secured to said outer stationary bearing element and having its inner periphery overlapping part of said second collar on the side away from said roll.

* * * * *

PO-1050
(5/69)

UNITED STATES PATENT OFFICE
CERTIFICATE OF CORRECTION

Patent No. 3,627,388 Dated December 14, 1971

Inventor(s) Lewis C. Jennings, Robert W. Tappin and Samuel S. Rickley

It is certified that error appears in the above-identified patent and that said Letters Patent are hereby corrected as shown below:

Col. 1, Line 61: The word "not" has been omitted from the printing of the patent between the words "unit" and "requiring".

Line 61 should read:

--part of the unit not requiring separate application or removal.--

Signed and sealed this 30th day of May 1972.

(SEAL)
Attest:

EDWARD M.FLETCHER,JR.
Attesting Officer

ROBERT GOTTSCHALK
Commissioner of Patents