May 22, 1945. F. E. FREY 2,376,425

DIOLEFIN PRODUCTION

Filed June 2, 1941 2 Sheets-Sheet 1

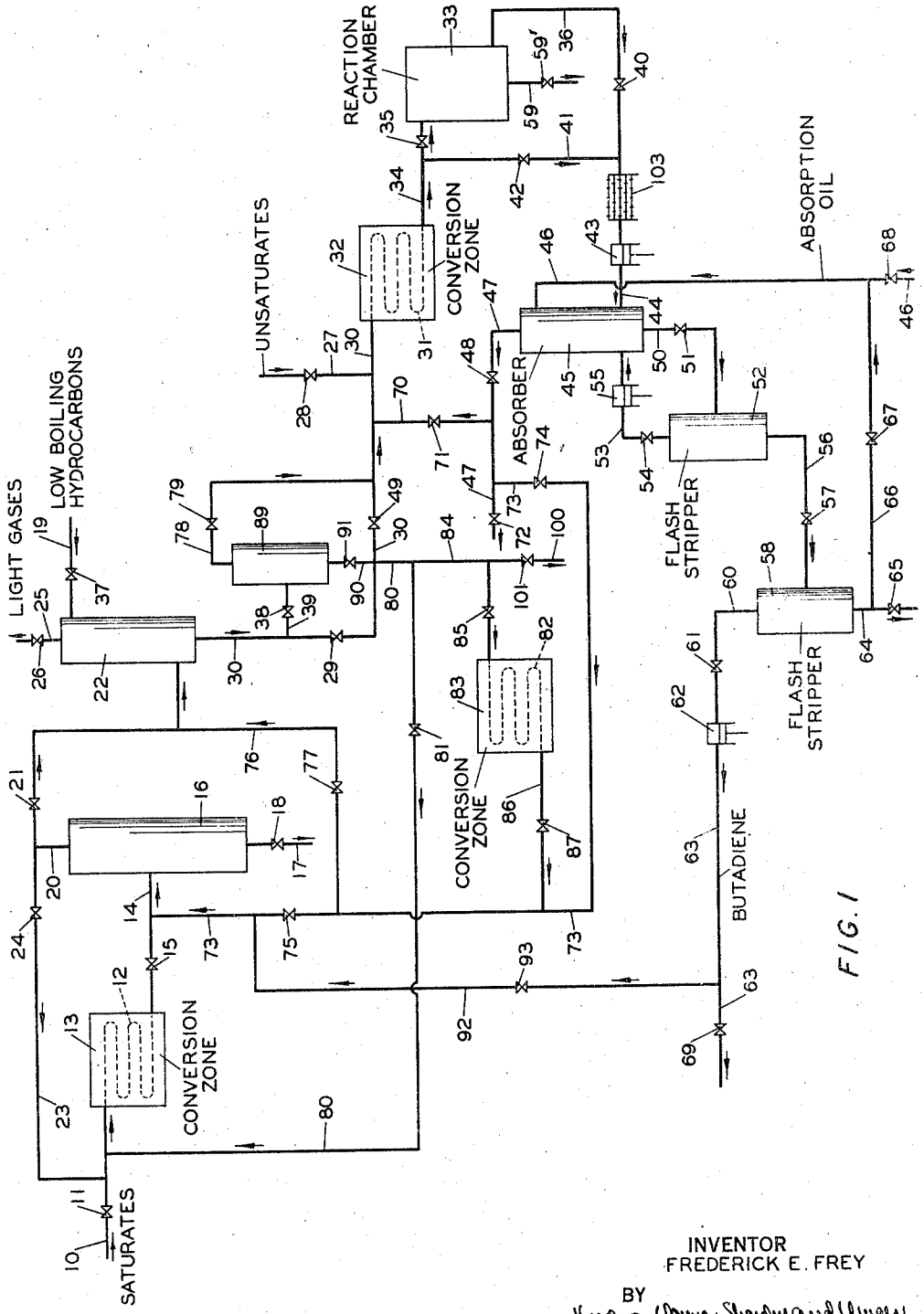

FIG. 1

INVENTOR
FREDERICK E. FREY

BY
Hudson, Young, Shardy and Yinger
ATTORNEY

May 22, 1945. F. E. FREY 2,376,425

DIOLEFIN PRODUCTION

Filed June 2, 1941 2 Sheets-Sheet 2

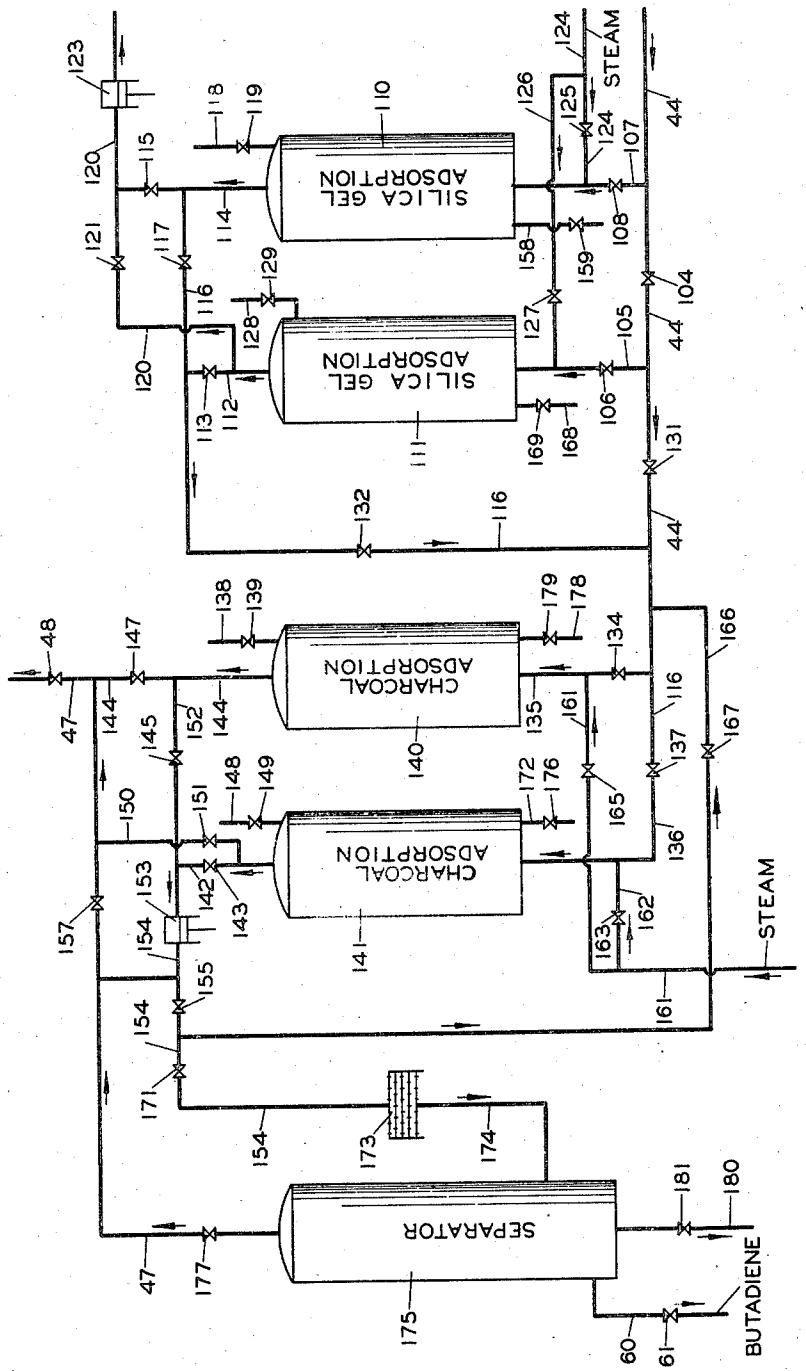

FIG. 2

INVENTOR
FREDERICK E. FREY

BY
Hudson Young, Thanley and Yingling
ATTORNEY

Patented May 22, 1945

2,376,425

UNITED STATES PATENT OFFICE

2,376,425

DIOLEFIN PRODUCTION

Frederick E. Frey, Bartlesville, Okla., assignor to Phillips Petroleum Company, a corporation of Delaware

Application June 2, 1941, Serial No. 396,344

8 Claims. (Cl. 260—680)

This invention relates to the production of diolefin hydrocarbons from low-boiling hydrocarbons heavier than methane. It relates more particularly to the production of diolefins such as butadiene, pentadiene, isoprene, cyclopentadiene, and the like by treating hydrocarbons of two to five carbon atoms per molecule at elevated temperatures and relatively low pressures.

An appreciable number of diolefins such as those just mentioned have been known to the art for a number of years. These have been produced in a number of ways which have included cracking of heavier oils, the inter-reaction of acetylene and ethylene to form butadiene, catalytic or thermal conversion of alcohols, both of the same number of carbon atoms per molecule as the desired diolefin and of a fewer number of carbon atoms per molecule, as well as the dehydrogenation of the corresponding olefins which in turn may have been produced by the dehydrogenation of the corresponding paraffins. Diolefins have also been reported as being present in the pyrolysis products of light hydrocarbons, including even methane. There are enormous quantities of such lighter hydrocarbons which are potentially available for the production of such diolefins, but apparently most of the commercial installations and processes to date have been one of the more involved types previously mentioned rather than the direct conversion of cheap and abundant light hydrocarbons to diolefins.

I have now found that I can successfully produce substantial yields of low-boiling diolefins of the type first mentioned from lighter gaseous hydrocarbons by a suitable combination of high-temperature conversion steps, to be more fully disclosed hereinafter, and also that I can operate such a process quite economically to produce high yields of diolefins when the high-temperature conversion is further combined with certain simple but efficacious separative steps, also to be more fully disclosed hereinafter. While methane may be converted in a first high temperature conversion step to produce heavier, but low-boiling, hydrocarbons which can be further treated in additional high-temperature conversion steps to produce the desired diolefins, I generally do not desire to have large amounts of methane in the initial hydrocarbon material to be converted. I prefer to treat primarily hydrocarbons of two to four or five carbon atoms per molecule, with hydrocarbons of two and/or three carbon atoms per molecule being the best adapted to my process. Methane may be present in the charge stock, sometimes in relatively high proportions, but will generally not enter extensively into the reactions which take place under the most desirable conditions.

In one modification of my invention an ethylene-rich gas is converted at an elevated temperature and low pressure for a time sufficient to produce a discernible but relatively small amount of light oils, a C_4 and heavier hydrocarbon fraction which contains the desired diolefins is removed from the effluents, a substantial portion of the C_3 and lighter fraction is recycled directly to the conversion step, and methane and other light gases are separated from an additional portion of the effluent with recycle of the C_2 and C_3 hydrocarbons.

In another modification of my invention an ethane-propane fraction is converted at an elevated temperature to produce an optimum yield of unsaturates of low molecular weight, the effluent is passed to a first separating means wherein heavier hydrocarbons and lighter gases are removed, the resultant unsaturate-containing C_2—C_3 fraction is passed to a second conversion step at an elevated temperature and low pressure to form an optimum yield of diolefins, diolefins are separated from the effluent, a portion of the remainder is recycled to the second conversion step, and a further portion is introduced into said first separating means to effect a removal of light gases and retention in the system of desired C_2 and C_3 hydrocarbons.

It is an object of my invention to convert low-boiling hydrocarbons into low-boiling diolefin hydrocarbons.

Another object of my invention is to convert low-boiling paraffin hydrocarbons to diolefins by a unique combination of two or more high temperature conversion steps.

Still another object of my invention is to effect a simple and unique combination of thermal conversion and separating steps whereby a suitable recycle stock for the thermal conversion step is readily separated from desired products and undesired by-products.

Further objects and advantages of this invention will become apparent from the accompanying disclosure and discussion.

The features of my invention will now be disclosed in connection with the accompanying drawings, which illustrate diagrammatically by way of flow sheets the manner of practicing my invention, together with auxiliary steps which may be incorporated with various modifications of it.

Figure 1 shows a complete arrangement of

apparatus in which my invention may be practiced, together with modifications.

Figure 2 shows another arrangement of apparatus for the recovery of butadiene, particularly useful in connection with my invention.

Referring now to Figure 1, low-boiling predominantly saturated hydrocarbons of two to five carbon atoms per molecule are introduced to the process through pipe 10 and valve 11 to the conversion or cracking zone 12, represented as a coil in a furnace 13. In the conversion zone 12 the hydrocarbons are subjected to elevated temperatures while under low pressure and low-boiling unsaturated hydrocarbons are formed in substantial amounts. The effluent of the conversion is passed through pipe 14 and valve 15 to separating means 16. Hydrocarbon material containing hydrocarbons of more than five carbon atoms per molecule may be removed from the system through pipe 17 and valve 18. The remaining lower boiling material, which will also include methane and hydrogen formed in the conversion, is passed from the separating means 16 through pipe 20, and at least a substantial portion thereof is passed through valve 21 to separating means 22. In one modification of operation a portion of this material may be passed from pipe 20 through pipe 23 and valve 24 to pipe 10 for retreatment in conversion zone 12. In separating means 22 light gases such as methane and hydrogen are separated from low-boiling unsaturated hydrocarbons and are discharged through pipe 25 and valve 26.

In a preferred form of my invention low-boiling unsaturated hydrocarbons pass through pipe 30 to the heating and/or conversion zone 31, represented by a tube coil in a suitable heating unit 32. With the initial step just described as a part of the process, such low-boiling unsaturated hydrocarbons are passed from separating means 22 through pipe 30 and valves 29 and 49. The material charged to the conversion zone 31 may be augmented by similar low-boiling unsaturated hydrocarbons introduced from any suitable outside source through pipe 27 and valve 28, which may at times constitute the sole charge to the process. In one modification the zone 31 is primarily a heating zone operated in conjunction with a reaction chamber 33 to which it is joined by a transfer line 34. When using such a reaction chamber, the material passing through pipe 30 is rapidly heated in zone 31 to a temperature only sufficient to initiate an uncatalyzed reaction, which takes place in reaction chamber 33. This chamber is preferably insulated to preclude substantial heat transfer through the walls thereof, and the inlet pipe 34 and the outlet pipe 36 are preferably so placed that a direct passage of the contents from the inlet to the outlet is not favored but rather so that a dilution and mixing of the chamber contents with the incoming mixture is favored. A clean-out device or manhole illustrated by conduit 59 equipped with a valve 59' is provided for the reaction chamber, by means of which any heavy oils or tar or hard carbonaceous material which may tend to accumulate therein may be removed as desired or necessary. The reaction effluents pass to a compressor 43, after being suitably cooled by means such as cooler 103, and are passed through pipe 44 to suitable separating means such as absorber 45. When the reaction chamber 33 is not used and the desired extent of reaction is effected in zone 31, the effluents may be passed directly through a pipe 41 and valve 42 to the cooler 103 and compressor 43, with the reaction chamber being out of the system by closing valve 35 in pipe 34 and valve 40 in pipe 36. When reaction chamber 33 is used the pipe 41 is not included in the system, as may be effected by closing valve 42.

The conversion effected in the zone 31 and/or 33 is such as to produce from the low-boiling unsaturated hydrocarbons charged through pipe 30 an optimum yield of low-boiling diolefins of the nature of butadiene, pentadiene, and cyclopentadiene. I have found that such optimum conditions exist when the reaction is carried out in a temperature range suitable for the production of low-boiling aromatic hydrocarbons for a period of time such that only a minor portion of such aromatics are produced. More specifically I prefer to operate within a range of about 1300 to 1700° F., preferably between about 1375 and 1550° F. for a period of time such that the effluent contains not more than about 10% by weight of C_4 and heavier hydrocarbons which are a result of synthesis reactions. However, of course, an appreciable amount of C_4 and heavier hydrocarbons should be produced by synthesis reactions, and I have found that the diolefin content does not approach a desirable value until at least about 3% by weight of the effluent consists of such C_4 and heavier hydrocarbons. When the material charged through pipe 30 is substantially free of C_4 and heavier hydrocarbons, the extent of conversion is readily determined by a simple analysis of the effluent. When such hydrocarbons are present in the charge stock, a material balance made in conjunction with an analysis of the charge and effluent will readily indicate to one skilled in the art the proportionate amount of C_4 and heavier hydrocarbons which have been produced from lighter hydrocarbons by synthesis reactions. The overall synthesis reactions are exothermic with highly unsaturated charge stocks, and endothermic when the charge is relatively saturated, and suitable means for removing or adding heat may be provided to maintain a fairly uniform reaction temperature. When a tube coil reactor is used, such as is illustrated by the heating and conversion zone 31, the first portion of the tube coil should be used to heat the charge rapidly to the reaction temperature, and reaction will take place in a continuation of the tube coil, which may be in heat exchange relationship with a suitable heat exchange medium such as flue gases, adjusted to maintain a more or less even reaction temperature. In some instances, however, it will often be desirable to allow the temperature in the tube coil reactor to increase slightly as the reaction proceeds and especially when exothermic reactions are occurring in the tube coil, with little or no removal of heat of reaction. In many cases it may be desirable to operate with the insulated reaction chamber 33, which should be quite large in cross section in comparison to the cross section of the tube coil 31, so that advantageously the contents can circulate repeatedly past the inlet. With such a reactor and a highly unsaturated stream, the charge is heated rapidly to an incipient reaction temperature and immediately introduced into the reaction chamber, where the reaction may take place at a temperature somewhat above that of the heated stream introduced thereto. Such a higher temperature is maintained by the exothermic heat of reaction and the absence of substantial heat loss through the chamber walls. The heat so developed is removed as the increased sensible heat content of the effluent, as compared with the charge, the charge temperature being so regulated under steady-state operating condi-

tions that any temperature increase of the effluent over the charge represents the heat developed by the reaction, and so that the temperature increase brings the charge to a desired reaction temperature. In most modifications the pressure should be low throughout the reaction, generally not in excess of about 50 pounds per square inch absolute, and may be subatmospheric although pressures lower than about 1.5 pounds per square inch absolute are generally not practical. With some relatively more unsaturated charge stocks, the formation of butadiene, and the line, will result to a substantial extent from polymerization-type reactions, and pressures as high as 100 pounds per square inch may be employed. However, such pressures also tend to promote formation of other and less desired products of higher molecular weight. With such pressures the throughput per unit of time is also increased. With relatively less unsaturated charge stocks, lower pressures are more desirable. Low partial pressures with the total pressure somewhat above atmospheric, may be readily employed by using diluent gases, which may be gases such as nitrogen, methane or other suitable gases which are substantially unreactive under the reaction conditions, or which may be in part or entirely gases such as steam or carbon dioxide, which are not strictly reactants but whose presence appears to suppress or compensate for undesired side reactions such as the formation of tar and heavy carbonaceous material. Carbon monoxide also tends to take up hydrogen under the reaction conditions, which also has the effect of favoring diolefin formation. When such diluents are used, the extent of conversion discussed above should be calculated on a basis free of such diluent, or of compounds formed from it.

Reaction effluents are passed to separation means for recovery of diolefins produced in the reaction. In one preferred manner of practicing my invention, a substantial portion of the C_3 and lighter material is separated and returned to the conversion zone just discussed, in admixture with fresh charge being passed through pipe **30**. The relative volume of such recycle C_3 and lighter material to the volume of fresh charge entering zone **31** is preferably between about 1:1 and 5:1, and advantageously is of the order of about 3:1.

Separation of C_3 and lighter material from C_4 and heavier may be accomplished in any one of a number of operations, but will be described in one preferred modification with reference to Figure 1 to the use of an oil absorber with simple flash stripping of the rich absorption oil, which may be used with particular advantage in conjunction with the foregoing conversion step as a modification of the present invention. In this modification, effluent of the conversion zone is passed to a low point of absorber **45**. In absorber **45** a separation is effected between C_4 and heavier hydrocarbons, and C_3 and lighter material, which will generally include some free hydrogen. The absorption pressure need not be excessively high although it should be appreciably above atmospheric. The conditions in any particular case will be dependent on the composition of the conversion effluent and upon the characteristics of the absorption oil used, which is introduced near the top of absorber **45** through pipe **46**. The absorber **45** is so operated that the gaseous effluent through pipe **47** and valve **48** is substantially free of C_4 and heavier hydrocarbons. The rich absorption oil is passed from a low point of absorber **45** through pipe **50** and valve **51** to a first flash stripper **52**. Stripper **52** is operated under such conditions of pressure and temperature that substantially all C_3 and lighter hydrocarbons in this rich oil are vaporized. The resulting vapors are passed from the top of stripper **52** through pipe **53** and valve **54**, and are compressed by compressor **55** to a pressure suitable to permit their injection at a low point of absorber **45**. Under conditions of operation such that the gases passing through pipe **47** are substantially free of C_4 hydrocarbons considerable C_3 and lighter material will be included in the oil passed through pipe **50**. In order for the flashed oil passing from stripper **52** through pipe **56** to be substantially free of C_3 and lighter material, an appreciable amount of desired C_4 hydrocarbons will be included in the vapors passing through pipe **53**. When operating under steady-state conditions the return of these vapors to absorber **45** offsets these disadvantages of simple absorption and flash stripping so that there is little or no net loss of either of these materials and the amounts of C_3 and lighter passed through pipe **47** and of C_4 and heavier passed through pipe **56** and subsequently recovered are substantially equivalent to the amounts of these materials passed to absorber **45** through pipe **44**.

The liquid from stripper **52** is passed therefrom through pipe **56** and valve **57** to a second flash stripper **58**, which is operated at a lower pressure and/or higher temperature than stripper **52**, and under conditions such that substantially all C_4 and C_5 hydrocarbons are vaporized and removed through pipe **60**. These vapors are passed through valve **61** and are passed by a vapor pump, or compressor, **62** through pipe **63** for further use as may be desired. They may be discharged through valve **69** for separation and purification of various individual hydrocarbons, or may be sent entirely or in part from pipe **63** through pipe **92** and valve **93** to the latter part of pipe **73** and separating means **16**, so that heavier products may be recovered along with similar products produced in cracking zone **12**.

The absorption oil used in absorber **45** should have a sufficiently low volatility that no appreciable part of it is vaporized in any part of the system but should not have such a high molecular weight that C_4 hydrocarbons, especially butadiene and the like, are not effectively absorbed. After having the low-boiling products flashed from it in stripper **58** the resultant lean absorption oil is removed through pipe **64**, and may be returned, at least in part, through pipe **66** and valve **67** to pipe **46** and the absorber **45**. This absorption oil will tend to become contaminated with relatively volatile products which are, however, heavier than the products recovered through pipe **63**. The flashed oil can be freed of such material by treatment in suitable apparatus not shown, being removed through valve **65**. Make-up oil is added through valve **68** in pipe **46**. The contaminated oil may be removed through valve **65** continuously or periodically in its entirety, or in any continuous portion, as may best fit the particular conditions involved, as may be readily ascertained by one skilled in the art.

In connection with this modification of my invention a high efficiency of operation is achieved if a substantial amount of the C_3 and lighter gases present in the effluent of the conversion zone are returned to the conversion zone. This is accomplished in the present instance by passing unabsorbed gases from absorber **45** through pipe **47** and valve **48**, and passing a substantial

portion thereof through valve 71 in pipe 70 to pipe 30. The remainder continues through pipe 47 and may be discharged from the system through valve 72 therein. Unsaturated hydrocarbons may be separated from such discharged material and returned to the process through pipe 27. Such a recovery of light unsaturated hydrocarbons from accompanying lighter gases may be accomplished within the system, by passing material from pipe 47 through pipe 73 and valves 74 and 75 to pipe 14 and separating means 16 and 22, or through pipe 76 and valve 77 to pipe 20 and separating means 22 alone, with suitable control of valve 75.

The content of low-boiling unsaturates in the charge passed through pipe 30 to the zone 31 and produced from saturated hydrocarbons entering the system through pipe 10 may be increased over that value readily obtainable by a once-through conversion in zone 12, in any one of several ways. A portion of the low-boiling effluent may be returned through pipe 23 and valve 24, as previously mentioned. However, this also entails return of other products such as methane and hydrogen, which is not always desirable. To preclude this, such material may be removed in separating means 22, and a portion of the effluent of means 22 removed through pipe 30 is passed through pipe 80 and valve 81 to be mixed with the charge being passed through pipe 10. When the charge to the system is a more or less saturated, heavier low-boiling material such as propane or butane, or a predominantly saturated C_3 or C_4 fraction, a further modification of my invention may be practiced. Such a heavier, low-boiling material may be introduced in liquid phase through pipe 19 controlled by a valve 37 to the top of demethanizer 22 as an absorption liquid, with suitable temperature and pressure conditions imposed on the operation of demethanizer 22. The rich absorption liquid passes from demethanizer 22 through pipe 30, and through pipe 39 controlled by valve 38 to fractionator 89, valves 29 and 49 in pipe 30 being closed. In fractionator 89 a suitable separation is made between light absorbed gases, including ethylene and propylene, and heavier hydrocarbons including ethane, some propylene, and the absorption liquid. The light fraction passes from fractionator 89 through pipe 78, controlled by valve 79, to pipe 30 and the reaction zone 31. The heavier hydrocarbon material is removed from the bottom of fractionator 89 through pipe 90, controlled by valve 91, and passed through pipe 80 for treatment as discussed herein.

In other instances a separate conversion zone may be advantageously used, such as is represented by coil 82 in the heater or furnace 83. A suitable charge stock is removed from pipe 80 through pipe 84 and valve 85, and the converted material is passed through pipe 86 and valve 87 to pipe 73 and subsequent separating means. When the conversion zone 82 is operated to produce light unsaturated hydrocarbons with a negligible amount of heavier hydrocarbons, the effluent may be passed directly to separating means 22. Under many conditions of operation, however, an appreciable amount of heavier material including valuable diolefins is so produced, and in such cases the effluent is passed through valve 75 to separating means 16. In some cases the conversion zone 82 may operate under similar conditions, or may be a substitute for the conversion zone 31 and/or 33. In such a case the operating conditions will be similar to those described for these zones and the diolefin product recovered from pipe 17 will be a principal product of the process. When desirable a part or all of the heavier hydrocarbon material removed from the bottom of fractionator 89 may be removed from the system for further treatment through conduits 90, 80, 84 and 100 and valves 91 and 101.

The separation step for the effluent of the reaction zones 31 and/or 33 has been discussed in connection with the use of a relatively nonvolatile and nonselective absorption oil. With such an operation the diolefin material recovered through pipe 63 will have associated with it appreciable amounts of other hydrocarbon material within the same general volatility range. In some cases it may be found more desirable to employ an absorption medium or solvent which is more or less selective in its action for highly unsaturated hydrocarbons such as butadiene, pentadiene, cyclopentadiene and the like. Such solvents known to the art include water, furfural, ethers and halogenated ethers such as sym.-dichloroethyl ether, various glycols and their organic esters such as the glycol acetates, glyceryl ethers, lactic acid esters, alkyl amines, and the like, and especially aqueous solutions of such materials. A suitable but somewhat different class of solvents is the SO_2-olefin-resin oils disclosed by Snow in his Patent 2,163,588. In another modification of the separation step, a material may be used which reacts selectively with diolefins to form readily decomposible chemical compounds. Such materials known to the art include aqueous solutions or compositions of a salt of a heavy metal of groups I and II of the periodic system, especially of such a metal in monovalent form, as a cuprous, mercurous or silver salt, and especially an aqueous alkali-halide-containing solution, or suspension, of a cuprous halide such as cuprous chloride. When such selective materials are used, the hydrocarbon material from which diolefins are removed my be either in gaseous or liquid phase.

With any of the foregoing liquid materials, the absorber 45 will be equipped internally with suitable baffles, bubble-plates, packing, or the like to ensure efficient contact between a descending liquid phase and an ascending phase. The flash strippers may be as described in connection with the use of an absorption oil, or may be also equipped for countercurrent flow of liquid and vapor with intimate contact of the two to provide more efficient separation, although of course equipment investment will be greater.

Solid absorbents, or adsorbents, may be used as well as absorption oil. Charcoal is one solid adsorbent which may be used with advantage, and various adsorptive oxide gels, such as silica gel may also be used. Such an adsorbent may be employed in a manner similar to that discussed in connection with the use of an absorption oil. Figure 2 illustrates a modification of the separation step which employs solid adsorbents for the separation of C_4 hydrocarbons from material lighter and heavier than C_4 hydrocarbons. Like numerals in Figures 1 and 2 designate parts performing similar functions. In a preferred manner of operating the separation equipment as illustrated in Figure 2, hydrocarbon material, having a composition similar to that material which is passed from a conversion zone through pipe 44 to a low point of absorber 45 in Figure 1, is passed through pipe 44 and pipe 107 controlled by valve 108 to chamber 110 when valve 104 is closed. Chamber 110 contains solid adsorbent material such as silica gel, which removes C_5 and higher

boiling hydrocarbon material from C_4 and lighter material. Chamber 110 is so operated that the gaseous effluent through pipe 114, valve 117 and pipe 116 is substantially free of C_5 and heavier hydrocarbons. The conditions in any particular case will be dependent on the composition of the charge to and on the adsorptive quality of the adsorbent employed in said chamber. When the adsorbent material in chamber 110 is substantially no longer effective in removing C_5 and heavier hydrocarbons and such hydrocarbons tend to appear in the material passing through pipes 114 and 116, the adsorbent material is said to be spent and charge material through pipe 44 is passed through valve 104 and pipe 105 controlled by valve 106 to chamber 111, and valve 108 is closed. Chamber 111 contains solid adsorbent material similar in character to fresh adsorbent material originally contained in chamber 110, and is operated in a manner similar to that described herein for chamber 110. While chamber 111 is on stream for the treatment of material charged through pipe 44, C_4 and lighter material pass from chamber 111 through pipe 112, valve 113 and pipe 116 when valve 121 is closed and C_5 hydrocarbons and heavier material previously adsorbed in chamber 110 are desorbed in any conventional manner such as by reducing the pressure on the spent adsorbent contained therein. This may be accomplished by means of pump 123 when valve 115 is open and valves 117 and 121 are closed. When the pressure on the adsorbent material is so reduced, C_5 and heavier hydrocarbon material pass through pipe 114 valve 115 and pipe 120. Such hydrocarbon material may be further treated as will appear most desirable. The initial desorbed material as long as it is substantially free of C_5, may be added to the effluent of chamber 111.

Removal of C_5 and heavier hydrocarbons from the spent adsorbent material revivifies said material thereby allowing it to be re-used for adsorption of additional hydrocarbons charged through pipe 44. The spent adsorbent material in chamber 110 may be revivified by treatment with steam which is introduced through pipe 124 and valve 125 when valve 127 is closed and which is removed together with desorbed material through pipes 114 and 120. Regeneration of spent silica gel which has adsorbed thereon heavy tars and other difficultly vaporizable carbonaceous material can be performed at various intervals of operation and may be accomplished, for example, by a conventional burning out procedure, as by introducing air diluted with flue gas.

When the adsorbent material in chamber 111 has become spent, chamber 110 is put back on stream by appropriate manipulation of valves and chamber 111 is subjected to the desorption step similar in character to that described in connection with chamber 110. C_5 and heavier hydrocarbons are removed from chamber 111 through pipes 112 and 120 and valve 121 when valve 113 is closed. When the spent adsorbent in chamber 111 contains silica gel it may be revivified by passage of steam therethrough which is charged through pipes 124 and 126 and valve 127 when valve 125 is closed. In such a manner chambers 110 and 111 are operated so that while the adsorbent in one is employed for the adsorption of C_5 and heavier hydrocarbons the spent adsorbent in the other is undergoing revivification and/or regeneration by desorption of material on the adsorbent, thereby affording a continuous process for the separation of material in conduit 44. Although only two chambers for the removal of C_5 and heavier hydrocarbons are illustrated in the drawings, it is within the scope of this invention that any number of chambers may be employed and operated intermittently as is desirable for any particular charge.

The material passing through pipe 116 and valve 132 contains substantially C_4 and lighter material. This material is passed to a charcoal adsorption system either through pipe 135 or pipe 136. When the hydrocarbon material in pipe 44 contains substantially no hydrocarbons boiling higher than C_4 hydrocarbons, chambers 110 and 111 may be omitted and said material may be passed directly through pipe 44 controlled by valves 104 and 131 to pipe 116 when valves 108 and 106 are closed.

In a preferred manner of operating, C_4 and lighter material in pipe 116 is passed through pipe 135 controlled by valve 134 to chamber 140 which contains activated, adsorbent charcoal. Chamber 140 is so operated that the charcoal therein removes substantially all of the C_4 hydrocarbons as well as some of the C_3 and C_2 hydrocarbons, methane and small amounts of hydrogen from the C_4 and lighter material passed therethrough. Unadsorbed lighter material which will contain C_3 and C_2 hydrocarbons as well as methane and hydrogen is passed through pipe 144, valve 147, pipe 47, and valve 48 after which it is treated in a manner similar to the treatment of the material in pipe 47 as described in connection with Figure 1 and the oil absorption method of separation. When the charcoal in chamber 140 is no longer effective in removing substantially all the C_4 hydrocarbons and C_4 hydrocarbons appear in pipe 144, charge material in pipe 116 is passed through valve 137 and pipe 136 to chamber 141 and valve 134 is closed. Chamber 141 also contains charcoal and is operated in a manner similar to chamber 140 so that substantially all of the C_4 hydrocarbons as well as some of the lighter hydrocarbons are adsorbed by the charcoal from the material passed therethrough. Unadsorbed material from chamber 141 passes through pipes 142 and 150 controlled by valve 151 to pipe 47 and through valve 48, when valve 143 is closed, after which it is treated as previously discussed. While chamber 141 is on stream and C_4 hydrocarbons are removed therein from the material charged through pipe 116, material adsorbed on the charcoal in chamber 140 is desorbed. This is done in a preferred manner by reducing the pressure in chamber 140 by means of pump 153 when valves 147, 134 and 165 are closed. The pressure is so reduced at first that the gas passing through pipes 144 and 152 and valve 145 to pump 153 is substantially free from C_4 hydrocarbons. This gas is passed by pump 153 through pipes 154 and 47 and valve 157 into the gas stream leaving chamber 141. After an initial period of applying lower pressure to the charcoal in chamber 140 additional gases lighter than C_4 hydrocarbons together with some C_4 hydrocarbons are desorbed, and these are passed by pump 153 from pipes 144 and 152 through valve 145, and through pipe 154, valve 155, pipe 166 and valve 167 to pipe 116 to be combined with the incoming charge to the charcoal chamber that is in use, which in this particular instance is chamber 141. C_4 hydrocarbons contained in the material passing through pipe 166 are thus removed by the charcoal chamber on stream. After this, the desorption of the bulk of C_4 hydrocarbons from the charcoal in

chamber 140 can be accomplished by conventional steaming methods, or the like. For example, steam may be passed through pipe 161 controlled by valve 165 and through pipe 135 to chamber 140 whereupon substantially all of the C_4 hydrocarbons are removed and passed by means of pump 153 through pipe 154 and valves 155 and 171 to cooler 173 and thence through pipe 174 to separating means 175.

After the charcoal in chamber 141 is no longer effective for the removal of C_4 hydrocarbons chamber 140 is put back on stream by the proper manipulation of valves, after the charcoal within this latter chamber has been rendered suitable for re-use such as by removing substantially all material previously adsorbed. The charcoal in chamber 141 is then subjected to a desorption operation similar in character to the desorption operation discussed in connection with the charcoal in chamber 140. Steam for desorption of C_4 hydrocarbons can be admitted to chamber 141 through pipe 161, valve 163, pipe 162 and pipe 136. Effluent from chamber 141 containing desorbed material is removed by pump 153 through pipe 142 controlled by valve 143 when valve 151 is closed. It is to be appreciated that additional charcoal adsorption chambers may be employed in the separation equipment and as many as will appear desirable for continuous operation of this separation process.

When steam is used to desorb the charcoal in chambers 140 or 141 the stream from cooler 173 will contain hydrocarbon material and water. Water is preferably removed from this stream by any conventional means, such as by dehydrating agents, before passing the stream to separating means 175. Separating means 175 is then so operated that a stream comprising substantially C_4 hydrocarbons is removed through pipe 60 controlled by valve 61 and a stream comprising substantially C_3 and some lighter hydrocarbons is removed through valve 177 and pipe 47 for further treatment as herein described. The hydrocarbon material removed through pipe 60 will contain butadiene and may be treated in a manner as herein described for similar material removed through conduit 60 when obtained from an oil absorption separation process.

When a means, such as a dehydrating agent, for removing water from the stream in pipe 174 is not employed, separating means 175 can be so operated that water is separated through pipe 180 controlled by valve 181.

Chambers 110, 111, 140, and 141 can be charged with appropriate adsorbent material through means represented by conduits 118, 128, 138 and 148, respectively, which in turn are controlled by valves 119, 129, 139, and 149, respectively. Similarly, when desirable, material may be removed from chambers 110, 111, 140, and 141 through suitable means represented by conduits 158, 168, 178 and 172, respectively, which in turn are controlled by valves 159, 169, 179, and 176, respectively.

It is the primary function of the first adsorption step, carried out in chambers 110 or 111, to remove C_5 and heavier material, and to allow substantially all C_4 and lighter material to pass through for subsequent treatment. Some of this heavier material is difficult to remove from the adsorbent, and it may be necessary from time to time to supplement a desorption process by a burning out process. For these reasons, it is desirable to use an adsorbent which will not take up lighter hydrocarbons to any great extent and which will also withstand a burning out operation, and ordinary silica gel, alumina, some bauxites, and the like can be used to advantage. With this preliminary removal of heavy material, full advantage may be taken of the great adsorptive powers of activated charcoal to remove and recover butadiene in an adsorption step carried out in chambers 140 or 141. Material difficult to remove from the charcoal will not be present to be taken up by it, and efficient and economical operation can be readily realized in the procedure disclosed, with continued repeated use of the charcoal without treatment other than that described. Other adsorbent material having adsorptive properties comparable with those of activated charcoal may, of course, be used in its place.

Although the adsorption of C_4 and lighter material has been described with respect to charcoal as an adsorbent, as other modifications it is within the scope of operation and the invention to employ materials such as granular or sheet rubber in a pure or compounded form, natural or synthetic, instead of charcoal. Such material will be more selective in its action for the adsorption of the diolefins than charcoal and absorbing oils previously discussed. Completely hydrogenated or other saturated rubbers, however, will generally not be found satisfactory in such a step. Solid adsorbents impregnated with selective agents, such as bauxite impregnated with cuprous chloride, may also be used.

Although such a modification is accompanied by considerable refrigeration and heating expense, which of course may be reduced by efficient heat-exchange arrangements, a fractional condensation-absorption process may be used to recover the C_4 and heavier hydrocarbons from the reaction effluent. Such a modification will be most effectively used when the charge to the zone 31 is substantially free of C_4 and heavier hydrocarbons, so that substantially all such material present in the effluent will be present as a result of synthesis reactions and will not be present in excessively large amounts, as discussed in connection with this conversion step. With such a modification the absorber 45 will have associated with it cooling and condensing equipment suitable for cooling the overhead gases and vapors, and condensing a substantial portion of the C_3 hydrocarbons. This condensate is allowed to pass downwardly through the absorber, as an absorption liquid, and contact countercurrently the ascending gases. In this manner the gases which contact the cooling and condensing equipment will contain only small portions of C_4 and heavier hydrocarbons and the liquid which leaves the bottom of the absorber will comprise substantially all of these hydrocarbons which are introduced to the absorber. The liquid from the bottom of the absorber 45 is preferably separated in fractional distillation steps, as by operating stripper 52 and/or 58 as fractionating columns, with return of C_3 and lighter material more or less as discussed.

The conversion carried out in zone 12 will in most cases be one which is so operated as to produce an optimum yield of low-boiling unsaturates, especially those of two and three carbon atoms per molecule, from paraffin hydrocarbons. Efficient conversion is readily realized at low expense by conducting the process in the absence of catalysts, especially when the charge introduced through pipe 10 comprises predominantly ethane and/or propane. Dehydrogenation catalysts may, of course, be used under conventional dehydro-

genation conditions, and their use will result in a lower production of methane. More especially when this step is operated noncatalytically, a substantial production of the desired unsaturated hydrocarbons will be accompanied by a production of some C_4 and heavier hydrocarbons which will include low-boiling diolefins, recoverable as products through pipe 17.

With high temperature conversion both ethane and propane give high and efficient yields of ethylene. This conversion to ethylene can be carried out with a concomitant conversion of ethylene to butadiene in the same conversion zone, when the reaction conditions discussed herein are followed and when the amount of material which does not contribute to one or the other of these reactions is low. With a charge of ethane and/or propane through pipe 10 to cracking zone 12, this may be realized by recovering butadiene through pipe 17, removal of methane and hydrogen by means 22 from substantially all of the light effluent passing through pipe 20, and a return of an intermediate fraction, which will be rich in ethylene back to the cracking zone 12 through pipe 80. At times, when propane is the charge, it may be worthwhile to provide for a higher concentration of ethylene in this recycle fraction by also removing ethane in means 22.

The various separating means are to be understood as diagrammatic, and the actual separations discussed may be carried out in a manner which seems most desirable and economical in conjunction with the conditions of any particular case. Since the drawings are diagrammatic, the application of my invention on a commercial scale will require the use of much conventional equipment, such as pumps, heaters, coolers, separators, accumulators, and the like, not shown in detail, but which may be readily applied and adapted for any particular installation by one skilled in the art. The general process, operating conditions, and material flows have been disclosed and discussed sufficient to serve as efficient guides for such purposes.

EXAMPLE I

As one example of the operation of one modification of my invention, an unsaturated C_2—C_3 mixture is converted to butadiene in the single conversion coil 31. Such a charge stock, with a composition as shown in column 1 of Table I, is introduced to the system through pipe 27, and is joined by about six times as much, by weight, of a recycle stock having a composition as shown in column 2. This recycle is formed by mixing about two parts by weight of the stream passing through pipes 47 and 70, having a composition as shown in column 5, and one part by weight of a substantially methane-free material passed from demethanizer 22 through pipe 30 and valve 29. The combined charge to the cracking coil 31 has a composition as shown in column 3. This combined charge is reacted in coil 31 at about atmospheric pressure and an average temperature of about 1470° F. for a reaction time of one second. From the effluent of the coil 31, which has a composition as shown in column 4, the C_4 and heavier material is separated from C_3 and lighter material. About two-thirds of the C_3 and lighter fraction, with a composition as shown in column 5, is returned directly to the reaction zone, and the remainder is passed to a demethanizer. The methane-free product of the demethanizer is also passed to the reaction zone, as discussed. The C_4 and heavier stock, which contains a large portion of butadiene, is subjected to further separation, and the butadiene is recovered in a substantially pure state. This product also contains other valuable, low-boiling hydrocarbons, including piperylene, isoprene, cyclopentadiene, benzene, and toluene, among others.

Table I

Component	Per cent by weight				
	1 Charge	2 Total recycle	3 Total charge	4 Cracking effluent	5 Gaseous effluent from absorber
H_2		1.35	1.15	1.75	1.90
CH_4	12.0	10.9	11.00	14.10	15.35
C_2H_2		2.08	1.78	1.80	1.97
C_2H_4	40.0	62.9	54.6	54.5	59.3
C_2H_6	27.0	16.03	17.7	14.05	15.14
C_3H_6	13.0	5.98	6.97	5.15	5.62
C_3H_8	8.0	0.76	1.80	0.65	0.72
C_4H_6				2.36	
C_4H_8				0.83	
C_4H_{10}				0.36	
Heavier				4.45	
	100.0	100.00	100.00	100.00	100.00

EXAMPLE II

As an example of the operation of another modification of my invention, liquid propane is passed to demethanizer 22 through pipe 19 as an absorption liquid. Methane and hydrogen are removed through pipe 25, and a rich absorption liquid is removed through pipe 30 and passed to fractionator 89 through pipe 39 and valve 38. From the bottom of fractionator 89 a C_3 fraction, having a composition as shown in column 1 of Table II and being in amount about 1.6 times by weight of the propane charged through pipe 19, is passed through pipes 90 and 80 to the cracking coil 12. This material is reacted at a temperature of about 1470° F. for a period of about 0.7 second under about atmospheric pressure, the effluent having a composition as shown in column 2. This effluent is passed through pipe 14 to separating means 16, wherein C_4 and heavier hydrocarbons are separated and recovered through pipe 17, for further recovery and purification of butadiene and other hydrocarbons. From separating means 16 the C_3 and lighter material is charged through pipe 20 to the demethanizer 22. No material is charged through pipe 10 or recycled through pipe 23.

Table II

Component	Per cent by weight					
	Cracking coil		Conversion coil			
	1 Charge	2 Effluent	3 Charge	4 Recycle	5 Total charge	6 Effluent
H_2		1.24		0.57	0.34	0.51
CH_4		17.2	2.11	13.1	8.65	11.7
C_2H_2		0.44	1.87	2.52	2.28	2.28
C_2H_4		27.3	76.2	66.6	70.5	59.9
C_2H_6		4.24	13.0	11.9	12.3	10.7
C_3H_6	28.0	28.1	3.52	4.69	4.23	4.21
C_3H_8	72.0	11.6	3.30	0.62	1.70	0.56
C_4H_6		1.08				2.97
C_4H_8		2.40				1.10
C_4H_{10}		0.63				0.43
Heavier		5.77				5.64
	100.0	100.00	100.00	100.00	100.00	100.00

The light material from fractionator 89, having a composition as shown in column 3 of Table II, is joined by a recycle stream from pipe 70 hav-

ing a composition as shown in column 4. The ratio of recycle from pipe **70** to charge through pipe **78** is about 3:2 by weight, and the total charge has a composition as shown in column 5. This total charge is passed to conversion coil **31**, wherein it is reacted at a temperature of about 1470° F. for a period of about one second at about atmospheric pressure. The conversion effluent has a composition as shown in column 6, and is passed to separating means **45**. C_3 and lighter material is separated from C_4 and heavier, and is passed from separating means **45** through pipe **47**. About two-thirds of this material is directly recycled through pipe **70**, as discussed, and the rest is passed from pipe **47** through pipes **73** and **76** to pipe **20** and demethanizer **22**. The C_4 and heavier material is passed through pipes **60**, **63**, and **92** to the latter part of pipe **73** and to separating means **16**, wherein a separation and recovery of butadiene and other desired heavier products produced both in cracking coil **12** and conversion coil **31** is effected.

Table III

Component	Per cent by weight						
	1	2	3	4	5	6	7
	Charge	Total recycle	Total charge	Cracking effluent	Gaseous material in conduits 47 and 70	Material in conduit 80	Material in conduit 63
H_2	----------	0.49	0.42	0.53	0.58	----------	----------
CH_4	3.00	16.4	14.4	17.0	18.8	----------	----------
C_2H_2	----------	----------	----------	----------	----------	----------	----------
C_2H_4	95.0	72.5	75.8	61.9	68.5	----------	----------
C_2H_6	2.00	6.74	6.07	6.87	7.59	57.4	----------
C_3H_6	----------	3.43	2.93	3.64	4.02	37.8	----------
C_3H_8	----------	0.44	0.38	0.46	0.51	4.8	----------
C_4H_6	----------	----------	----------	3.08	----------	----------	32.2
C_4H_8	----------	----------	----------	1.21	----------	----------	12.6
C_4H_{10}	----------	----------	----------	0.45	----------	----------	4.6
Heavy	----------	----------	----------	4.86	----------	----------	50.6
	100.00	100.00	100.00	100.00	100.00	100.0	100.0

Example III

As an example of the operation of another modification of my invention, an unsaturated charge stock comprising predominantly ethylene is converted to butadiene in the single conversion coil **31**. Such a charge stock, with a composition as shown in column 1 of Table III, is introduced to the system through pipe **27**, and is joined by about six times as much, by weight of a recycle stock having a composition as shown in column 2. This recycle is formed by mixing about 5.5 parts by weight of the stream passing through pipes **47** and **70**, having a composition as shown in column 5, and one part by weight of a stream substantially free from C_3 and heavier material passed from separating means **89** through pipe **78** and valve **79**, and having a composition similar to the material charged through pipe **27**. The combined charge to the cracking coil **31**, so formed, has a composition as shown in column 3. This combined charged is reacted in coil **31** at a pressure just sufficiently above atmospheric to provide a positive pressure and flow through the system, and an average temperature of about 1470° F. for a reaction time of 1.0 second. The effluent of the coil which has a composition as shown in column 4 is passed to a first separator for the separation of C_4 and heavier material from C_3 and lighter material, as in absorber **45** and associated equipment. About 80 per cent of the C_3 and lighter fraction, with a composition as shown in column 5 is returned directly to the reaction zone through pipes **47** and **70**, as mentioned, and the remainder is passed to demethanizer **22** from which a fraction containing about 3.6 per cent hydrogen and 96.4 per cent methane is removed as a gaseous effluent through pipe **25**. A heavier fraction from the demethanizer is passed to another separating means as represented by numeral **89** in Figure 1, from which a gaseous effluent is removed and passed to the reaction zone through pipe **78**, as discussed.

A heavier fraction from separating means **89**, having a composition as shown in column 6, may be discharged. The C_4 and heavier material from the first separator has a composition as shown in column 7 and is removed through pipe **63** and subjected to further separation so that butadiene is recovered in a substantially pure state. About 2 to 8 per cent of the amount of material listed as ethylene in columns 2–5 consists of acetylene.

In a further modification, the heavy fraction from **89** may be passed through pipes **80**, **84** and **85** to heating and/or conversion coil **82** for additional production of butadiene.

Example IV

As an example of the operation of still another modification of my invention, essentially pure ethylene is charged to the conversion zone **31** through pipes **27** and **30** to the substantial exclusion of higher and lower boiling hydrocarbons. This material is reacted at a temperature of about 1570° F. for a period of 0.16 second under a pressure, just sufficiently above atmospheric to provide a positive pressure and flow through the system, the effluent having a composition as shown in column 1 of Table IV. This effluent is passed to silica gel-charcoal adsorption equipment as illustrated in Figure 2 for the separation of various fractions. The C_4 and heavier material, which comprises about 9.5 per cent by weight of the effluent, has a composition shown in column 2 of Table IV. The material separated and passing through pipe **47** is passed through valve **48**, pipe **73**, valves **74** and **75**, and pipe **14** to separating means **16**, with valves **71**, **72** and **77** closed. Material in pipe **47** is joined in pipe **73** by material from conversion zone **82**. From separating means **16**, C_3 and lighter material is passed to demethanizer **22** from which methane and hydrogen are removed through pipe **25** controlled by valve **26**. C_3 and C_2 hydrocarbons are removed through pipe **30** and passed through valve **29** through pipes **80** and **84** and valve **85** to conversion zone

82, with valves 38, 49, 81, and 101 closed. In conversion zone 82 substantial amounts of ethylene in combination with other hydrocarbons are converted to butadiene under conditions similar to those discussed in connection with the charge stock to conversion coil 31 in Example III. Butadiene from the conversion zone is removed from separating means 16 through pipe 17 controlled by valve 18.

When a mixture of 73.7 mol per cent of steam and 26.3 mol per cent of essentially pure ethylene is charged to the conversion zone 31, as through pipes 27 and 30, and valve 28, and is reacted therein at a temperature of about 1570° F. for a period of 0.2 second, under about atmospheric pressure, the effluent has a composition as shown in column 3 of Table IV. Subsequent separation and further treatment of this effluent is similar to that described above in connection with the treatment of the effluent from the conversion of relatively pure ethylene in the absence of steam, with production of a C_4 and heavier fraction as shown in column 4 of Table IV, which comprises about 7.3 per cent by weight of the hydrocarbon effluent.

It is seen from Table IV that when steam is present in the cracking of ethylene to produce butadiene, the effect is apparently more than one of simple dilution. While on a once-through basis the yield of butadiene is only slightly greater under comparable time-temperature conditions, the yield of heavier material is quite substantially lessened, and the acetylene produced is very markedly increased. A recycle of C_2 hydrocarbons such as would be carried out in actual plant practice will return this acetylene to the reaction zone, with a very marked increase in butadiene production per pass, as compared with similar operations in the absence of steam.

The above examples serve to exemplify my invention, but should not necessarily be construed as limiting it.

Table IV

Component	Per cent by weight			
	Conversion of ethylene alone		Conversion of ethylene in presence of steam	
	1	2	3	4
	Conversion coil effluent	Hydrocarbon material in pipe 60	Conversion coil effluent (free of oxygen-containing compounds)	C_4 and heavier fraction
H_2	0.38		1.43	
CH_4	1.97		2.55	
C_2H_2	4.49		20.20	
C_2H_4	78.32		62.30	
C_2H_6	2.50		4.93	
C_3H_6	2.55		1.29	
C_3H_8	0.33			
C_4H_6	3.95	41.7	3.28	45.0
C_4H_8	1.33	14.1	1.25	17.1
C_4H_{10}	0.07	0.7	0.31	4.2
Heavy	4.11	43.5	2.46	33.7
	100.00	100.0	100.00	100.0
Reaction conditions:				
Temperature, °F		1,570	1,570	
Time, sec		0.16	0.16	
Pressure		Atm.	Atm.	
Ethylene reacted, percent		21.6	36.5	

I claim:

1. A process for producing diolefin hydrocarbons having four or more carbon atoms per molecule from lower boiling saturated hydrocarbons, which comprises converting such lower boiling hydrocarbons in a first reaction zone at an elevated conversion temperature and low pressure for a period of time sufficient to produce an optimum yield of low-boiling unsaturated hydrocarbons, passing the effluent of said first reaction zone to a first separating means, separating therefrom a C_2—C_3 hydrocarbon fraction, subjecting said hydrocarbon fraction in a second reaction zone to an elevated conversion temperature at a low pressure for a period of time sufficient to produce between about 3 and 10 per cent by weight of synthesized C_4 and heavier hydrocarbons in the effluent, passing the effluent to a second separating means and separating from the effluent and removing from the process a C_4 and heavier hydrocarbon material containing diolefins so produced, separating also from said effluent C_3 and lighter material, returning a portion of said C_3 and lighter material to said second conversion zone, and passing a further portion of said C_3 and lighter material to said first separating means.

2. A process for producing diolefin hydrocarbons having at least four carbon atoms per molecule from lower boiling saturated hydrocarbons, which comprises subjecting such lower boiling hydrocarbons in a first reaction zone to an elevated conversion temperature and a low pressure for a period of time sufficient to produce an optimum yield of low-boiling unsaturated hydrocarbons, passing the effluent of said first reaction zone to a separating means, separating therefrom a C_2—C_3 hydrocarbon fraction, subjecting said hydrocarbon fraction in a second reaction zone to an elevated conversion temperature within the range of 1300–1700° F. at a low pressure within the range of 1.5 to 50 pounds per square inch absolute for a period of time sufficient to produce between about 3 to 10 weight per cent of hydrocarbons of four to five carbon atoms per molecule in the effluent of said second conversion zone comprising low-boiling diolefin hydrocarbons of at least four carbon atoms per molecule, separating from the effluent and removing from the process a C_4 and heavier hydrocarbon material, returning a portion of the remaining C_3 and lighter material of said effluent to said second reaction zone in an amount at least equal in amount to the said C_2—C_3 fraction charged, and passing a further portion of said remaining C_3 and lighter material to said first separating means.

3. A porcess for producing low-boiling diolefins of four and five carbon atoms per molecule, which comprises subjecting an ethane-propane mixture to dehydrogenation at a low pressure and elevated temperature to produce an optimum yield of unsaturated hydrocarbons of two and three carbon atoms per molecule, passing the dehydrogenation effluent to a first separating means, separating a C_2—C_3 hydrocarbon fraction in said first separating means, subjecting said C_2—C_3 fraction in admixture with between about one and five parts by weight of a recycle fraction for each part of said C_2—C_3 fraction to conversion at an elevated temperature within the range of about 1300–1700° F. and a low pressure not greater than about 50 pounds per square inch for a period of time sufficient to produce between about 3 and 10 per cent by weight of synthesized C_4 and heavier hydrocarbons in the effluent, in a second separating means separating from the effluent and removing from the process a C_4 and heavier fraction containing diolefins of four and five carbon atoms per molecule so produced, returning a portion of the remaining C_3 and lighter

material to said conversion as said recycle fraction, and passing a further portion of the said remaining C_3 and lighter material to said first separating means.

4. A process for producing diolefin hydrocarbons of four to five carbon atoms per molecule from low-boiling hydrocarbons of at least two carbon atoms per molecule, which comprises converting an ethylene-rich gas at a low pressure and elevated temperature to produce butadiene, cooling the resultant gas to a near-atmospheric temperature, passing said gas through a body of a first adsorbent to remove C_5 and heavier hydrocarbons, passing unabsorbed gases through a first body of a second adsorbent to remove C_4 hydrocarbons, recovering ethylene from at least a portion of unabsorbed gases and converting same as a part of said ethylene-rich gas, removing said first body of second adsorbent from service to recover adsorbed C_4 hydrocarbons and substituting therefor a second body of said second adsorbent, subjecting said first body of said second adsorbent to an initial desorption to remove C_3 and lighter gases substantially free of C_4 hydrocarbons and adding a gas so removed to unabsorbed gases effluent from a second body of said second adsorbent, subsequently removing a desorbed gas containing minor amounts of C_4 hydrocarbons and adding a gas so removed to a gas passing to a second body of said second adsorbent, and finally recovering a desorbed gas rich in C_4 hydrocarbons and containing butadiene as a product of the process.

5. A process for recovering C_4 hydrocarbons from a normally gaseous mixture containing between 3 and 10 per cent of C_4 and heavier hydrocarbons, which comprises passing said normally gaseous mixture through a body of a first adsorbent to remove C_5 and heavier hydrocarbons, passing unabsorbed gases through a first body of a second adsorbent to remove C_4 hydrocarbons, removing said first body of second adsorbent from service to recover adsorbed C_4 hydrocarbons and substituting therefor a second body of said second adsorbent, subjecting said first body of said second adsorbent to an initial desorption to remove C_3 and lighter gases substantially free of C_4 hydrocarbons and adding a gas so removed to unabsorbed gases effluent from a second body of said second adsorbent, subsequently removing a desorbed gas containing minor amounts of C_4 hydrocarbons and adding a gas so removed to a gas passing to a second body of said second adsorbent, and finally recovering a desorbed gas rich in C_4 hydrocarbons as a product of the process.

6. A process for producing diolefin hydrocarbons from low-boiling hydrocarbons of at least two carbon atoms per molecule, which comprises subjecting an ethylene-rich gas to an uncatalyzed conversion at a temperature between about 1300 and 1700° F. under a low pressure for a time sufficient to produce between about 3 and 10 per cent by weight of synthesized C_4 and heavier hydrocarbons in the effluent, cooling the resultant gas to a near-atmospheric temperature, passing said gas through a body of a first adsorbent to remove C_5 and heavier hydrocarbons, passing unabsorbed gases through a first body of a second adsorbent to remove C_4 hydrocarbons, recovering ethylene from at least a portion of unabsorbed gases and converting same as a part of said ethylene-rich gas, removing said first body of second adsorbent from service to recover adsorbed C_4 hydrocarbons and substituting therefor a second body of said second adsorbent, subjecting said first body of said second adsorbent to an initial desorption to remove C_3 and lighter gases substantially free of C_4 hydrocarbons and adding a gas so removed to unabsorbed gases effluent from a second body of said second adsorbent, subsequently removing a desorbed gas containing minor amounts of C_4 hydrocarbons and adding a gas so removed to a gas passing to a second body of said second adsorbent, and finally recovering a desorbed gas rich in C_4 hydrocarbons and containing butadiene as a product of the process.

7. A process for producing diolefin hydrocarbons having at least four carbon atoms per molecule from a feed composed principally of saturated hydrocarbons having two to three carbon atoms per molecule which comprises subjecting said feed in a first reaction zone to an elevated conversion temperature and low pressure for a period of time sufficient to produce an optimum yield of low boiling unsaturated hydrocarbons, passing the effluent of the first reaction zone to a separating means, separating therefrom a hydrocarbon fraction consisting of hydrocarbons having two to three carbon atoms per molecule, subjecting said hydrocarbon fraction in a second reaction zone in the absence of a catalyst and in the abesnce of an oxidizing substance to an elevated conversion temperature within the range of 1300 to 1700° F. at a low pressure within the range of 1.5 to 50 pounds per square inch absolute for a period of time sufficient to produce at least 3 but not more than 10 per cent by weight of synthesized hydrocarbons of four to five carbon atoms per molecule in the effluent thereof, passing the effluent of said second reaction zone to a second separating means and separating from the effluent C_4 and heavier hydrocarbons containing diolefins, separating also from said effluent C_3 and lighter hydrocarbons, passing at least part of said C_3 and lighter hydrocarbons to said first separating means, and recycling another portion of said C_3 and lighter hydrocarbons to said second reaction zone.

8. A process for producing diolefin hydrocarbons having four and five carbon atoms per molecule from ethane and propane which comprises subjecting a hydrocarbon mixture composed principally of ethane and propane to an elevated temperature and low pressure in a first reaction zone effecting conversion of a portion of said mixture to ethylene, separating from the effluent of said zone a hydrocarbon fraction consisting of hydrocarbons of two to three carbon atoms per molecule including ethylene, subjecting said hydrocarbons in a second reaction zone in the absence of a catalyst and in the absence of an oxidizing substance to an elevated conversion temperature within the range of 1300 to 1700° F. and a low pressure within the range of 1.5 to 50 pounds per square inch absolute for a period of time sufficient to produce at least 3 but not more than 10 weight per cent of synthesized hydrocarbons of four to five carbon atoms per molecule in the effluent of said second reaction zone, and separating said synthesized hydrocarbons from the effluent of the second reaction zone, separating from said effluent C_3 and lighter hydrocarbons, passing at least part of said C_3 and lighter hydrocarbons to said first-named separating step, and recycling another portion of said C_3 and lighter hydrocarbons to said second reaction zone.

FREDERICK E. FREY.