T. E. MURRAY, Jr.

ELECTRIC CUT-OUT.

APPLICATION FILED FEB. 4, 1913.

1,064,985. Patented June 17, 1913

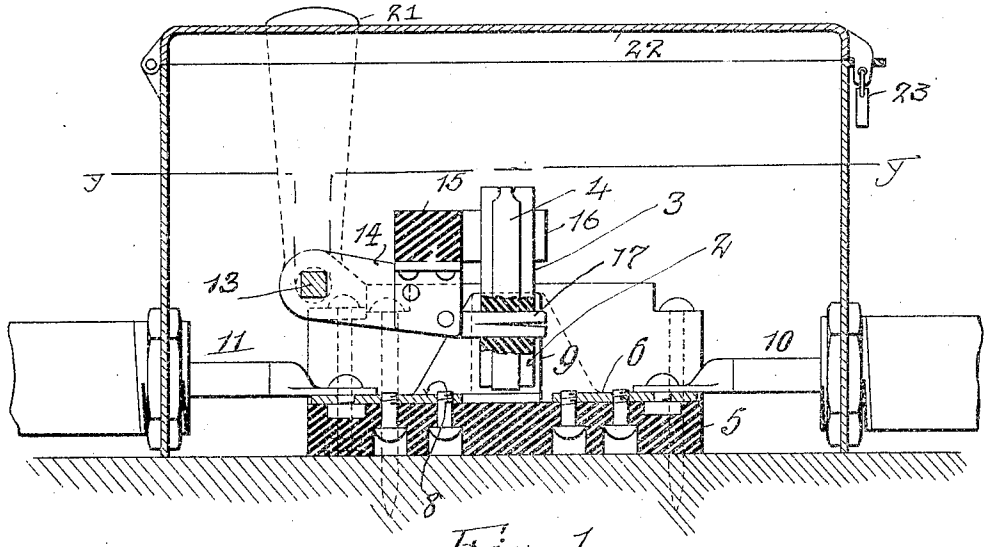

Fig. 1.

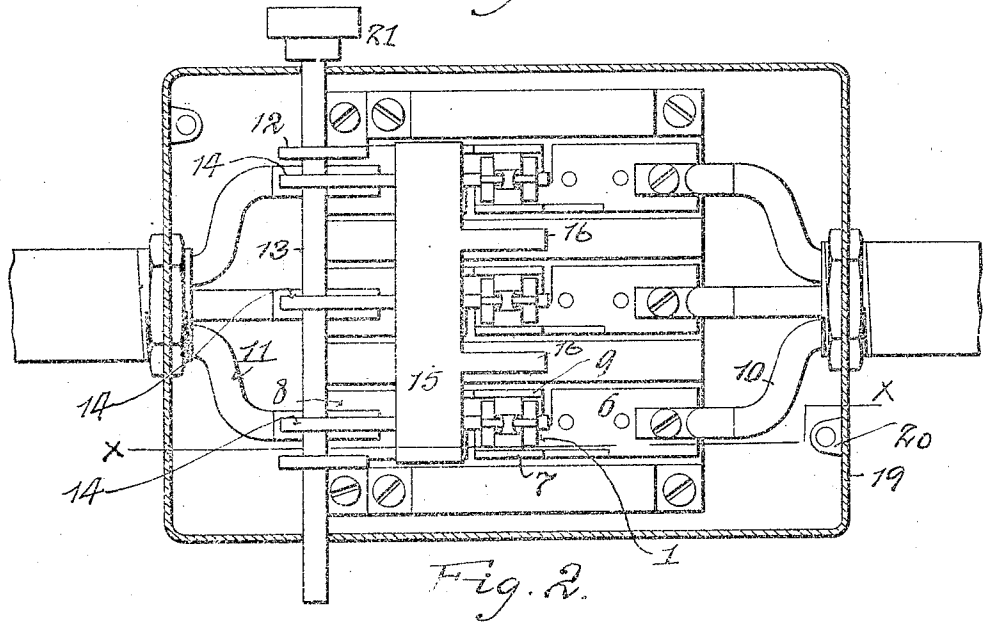

Fig. 2.

Fig. 3

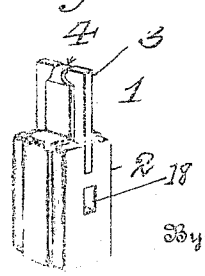

Witnesses:
Gertrude N. Porter
May T. McGarry

Inventor
Thomas E. Murray Jr.
By his Attorney
[illegible]

UNITED STATES PATENT OFFICE.

THOMAS E. MURRAY, JR., OF NEW YORK, N. Y., ASSIGNOR TO THOMAS E. MURRAY, OF NEW YORK, N. Y.

ELECTRIC CUT-OUT.

1,064,985. Specification of Letters Patent. Patented June 17, 1913.

Application filed February 4, 1913. Serial No. 746,997.

To all whom it may concern:

Be it known that I, THOMAS E. MURRAY, Jr., a citizen of the United States, residing at New York, in the county of New York and State of New York, have invented a certain new and useful Improvement in Electric Cut-Outs, of which the following is a specification.

The invention is an electric cut-out, designed for use in connection with fuse carriers having exposed fuse strips on their opposite sides, which coöperate with contacts on the base. The construction is such that one or more carriers may be mounted detachably on a pivoted support, whereby they may be moved into and out of cooperation with said contacts. The support may be operated from the exterior of a sealed casing inclosing the parts.

In the accompanying drawings Figure 1 is a longitudinal section of my cut-out on the line x, x of Fig. 2. Fig. 2 is a top view, with the cover removed, the casing being in horizontal section on the line y, y of Fig. 1. Fig. 3 shows a fuse carrier in perspective.

Similar numbers of reference indicate like parts.

The fuse carrier 1 comprises a block 2 of insulating material, in which is set a thin plate 3 of like material. The middle contracted portion of the fuse strip 4 is disposed in a recess in the upper edge of said plate. Said strip is doubled over the edge of the plate so that its arms are in contact with opposite sides of said plate and said block. The ends of the strip are secured in any suitable way to the bottom of the block. When the fuse is blown, rupture takes place at the contracted portion, and by reason of the fact that the current moves in opposite directions in the arms of the strip on opposite sides of plate 3, repulsion takes place between the fields surrounding said arms, whereby said arms are forced asunder, so that wide separation of the ends of the blown fuse is thus assured. A fuse constructed on this principle is disclosed in my copending application, Serial No. 692,258, filed April 22, 1912, and is not herein claimed. My present device is designed to permit of convenient insertion and removal of such a fuse carrier in one or more circuits.

The base 5 is preferably of refractory insulating material, and is here shown with three longitudinal recesses. In each recess is a plate 6 turned upwardly at its inner end to form a vertical contact 7. At the opposite end of the recess is a similar plate 8 turned upwardly at its inner end to form a vertical contact 9. The plates are separated, and the contacts 7 and 9 stand opposite one another to receive between them the fuse carrier 1, which is placed so that the arms of the fuse strip on the opposite sides of block 2 respectively meet said contacts. One circuit terminal, as 10, is connected to plate 6, and corresponding circuit terminal 11 is connected to plate 8, circuit thus being closed through the fuse strip.

Journaled in lugs 12 on the outer walls of base 5 is a shaft 13. Between said lugs said shaft is polygonal in cross section, and carries three arms 14. To the upper side of said arms is secured a cross bar 15 of insulating material, having lateral projections 16 which extend over the partitions between the base block recesses. Extending also from each of said arms and parallel to projections 16 is a split rod 17, which enters an opening 18 in the fuse carrier 1, and is compressed in said opening, so that the carrier when placed on said rod is tightly held thereon. The shaft 13 extends through a wall of a metal casing 19 which covers the device. Said casing may be secured to a wall or other support by internal lugs 20. Outside of said casing, shaft 13 carries a handle 21, by which it may be rocked. The casing is provided with a hinged cover 22 secured by a suitable seal fastening 23. Three circuit leads are here shown provided with the usual threaded sheaths which are secured in the end walls of the casing by suitable nuts.

In operation, the cover 22 is removed, and the several fuse carriers are placed upon the several rods 17. The handle 21 is turned vertically, bringing said carriers between the several pairs of contacts 7, 9, and hence the fuse strips into circuit. The cover is closed, and the seal fastening applied. The fuse carriers can be lifted out of their con-

tacts by moving the handle in suitable direction, and replaced by restoring the handle to its original position. This can be done without disturbing the cover. The projections 16 prevent possible contact of adjacent fuse strips after the arms have been thrown asunder in the manner previously explained.

I claim:

1. An electric cut-out, comprising a base, separated contacts thereon, a two-armed fuse strip, a carrier interposed between the arms of said strip and a support for said carrier pivoted on said base for moving said fuse arms into and out of coöperation with said contacts.

2. An electric cut-out, comprising a base, separated contacts thereon, a two-armed fuse strip, a carrier interposed between the arms of said strip, a support for said carrier pivoted on said base for moving said fuse arms into and out of coöperation with said contacts, and means for detachably connecting said carrier to said support.

3. An electric cut-out, comprising a base, separated contacts thereon, a fuse carrier provided with an opening and having an exposed fuse strip upon its opposite sides coöperating with said contacts, a support for said carrier pivoted on said base for moving said carrier into and out of cooperation with said contacts, and an arm on said support extending between said contacts and received in said opening in said carrier.

4. An electric cut-out, comprising a base, separated contacts thereon, a two-armed fuse strip, a carrier interposed between the arms of said strip, a support for said carrier pivoted on said base for moving said fuse arms into and out of coöperation with said contacts, a casing wholly inclosing said parts, and means external to said casing for operating said support without opening said casing.

5. An electric cut-out, comprising a base, separated contacts thereon, a fuse carrier provided with an opening and having an exposed fuse strip upon its opposite sides, the said fuse strip coöperating with said contacts, and a bell crank lever pivoted on said base and having one arm entering said opening in said fuse carrier, to move the same into and out of coöperation with said contacts.

6. An electric cut-out, comprising a base, separated contacts thereon, a fuse carrier having an exposed fuse strip on its opposite sides coöperating with said contacts, the said strip being doubled upon itself with its arms parallel and in mutually repulsive proximity whereby upon the rupture of said strip, said arms shall be mutually forced asunder, and walls of insulating material on said base in proximity to and facing said arms.

7. An electric cut-out, comprising a base, separated contacts thereon, a fuse carrier having an exposed fuse strip on its opposite sides coöperating with said contacts, the said strip being doubled upon itself with its arms parallel and in mutually repulsive proximity whereby upon the rupture of said strip, said arms shall be mutually forced asunder, walls of insulating material on said base in proximity to and facing said arms, and a support for said walls and carrier pivoted to said base and movable to convey said carrier into and out of coöperation with said contacts.

8. An electric cut-out, comprising a base, two pairs of separated contacts thereon, two fuse carriers, each having an exposed fuse strip on its opposite sides coöperating with a pair of said contacts, the said strip being doubled upon itself with its arms parallel and in mutually repulsive proximity whereby upon the rupture of said strip, said arms shall be mutually forced asunder, and a screen of insulating material between said carriers.

9. An electric cut-out, comprising a base, two pairs of separated contacts thereon, two fuse carriers, each having an exposed fuse strip on its opposite sides coöperating with a pair of said contacts, the said strip being doubled upon itself with its arms parallel and in mutually repulsive proximity whereby upon the rupture of said strip, said arms shall be mutually forced asunder, a screen of insulating material between said carriers, and a support for said screen and carriers pivoted to said base and movable to convey said carriers into and out of coöperation with said contacts.

10. An electric cut-out, comprising a base, having a plurality of longitudinal recesses, a pair of separated contacts in each recess, fuse carriers, each having an exposed fuse strip upon its opposite sides, the said fuse strips coöperating with said pairs of contacts, a rock shaft journaled on said base, arms on said shaft engaging said fuse carriers to move the same into and out of cooperation with said contacts, a cross bar on said arms, and projecting plates of insulating material on said bar disposed opposite the intervals between said arms.

In testimony whereof I have affixed my signature in presence of two witnesses.

THOMAS E. MURRAY, JR.

Witnesses:
GERTRUDE T. PORTER,
MAY L. MCGARRY.