Sept. 30, 1952 D. E. MORRISON 2,612,023

COOLING OF GAS TURBINE ENGINE FLAME TUBES

Filed Dec. 23, 1950 2 SHEETS—SHEET 1

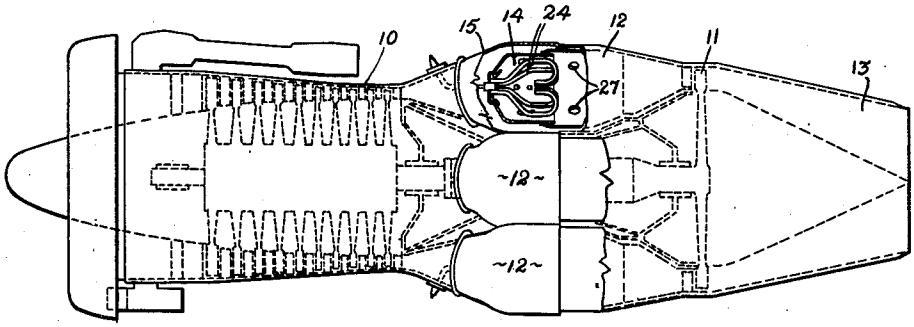

FIG 1.

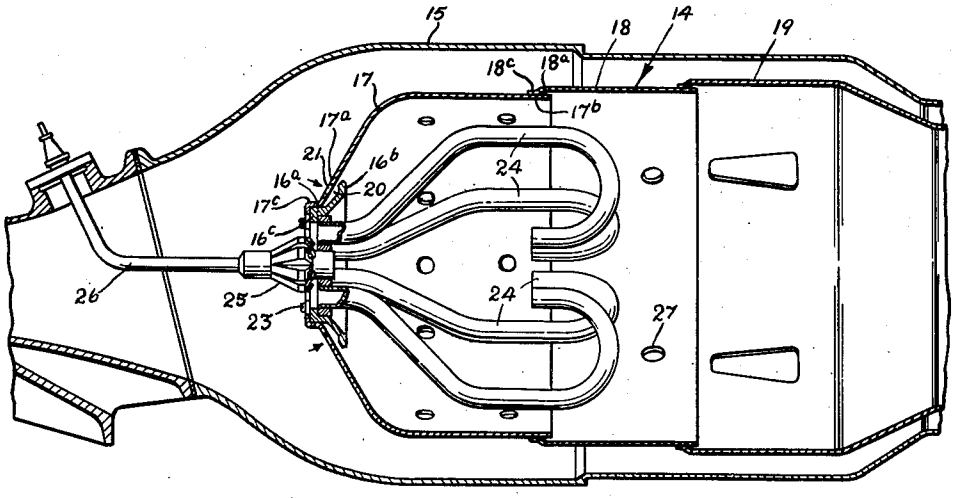

FIG 2.

INVENTOR
D.E.MORRISON
PER

ATTORNEY

Sept. 30, 1952 D. E. MORRISON 2,612,023

COOLING OF GAS TURBINE ENGINE FLAME TUBES

Filed Dec. 23, 1950 2 SHEETS—SHEET 2

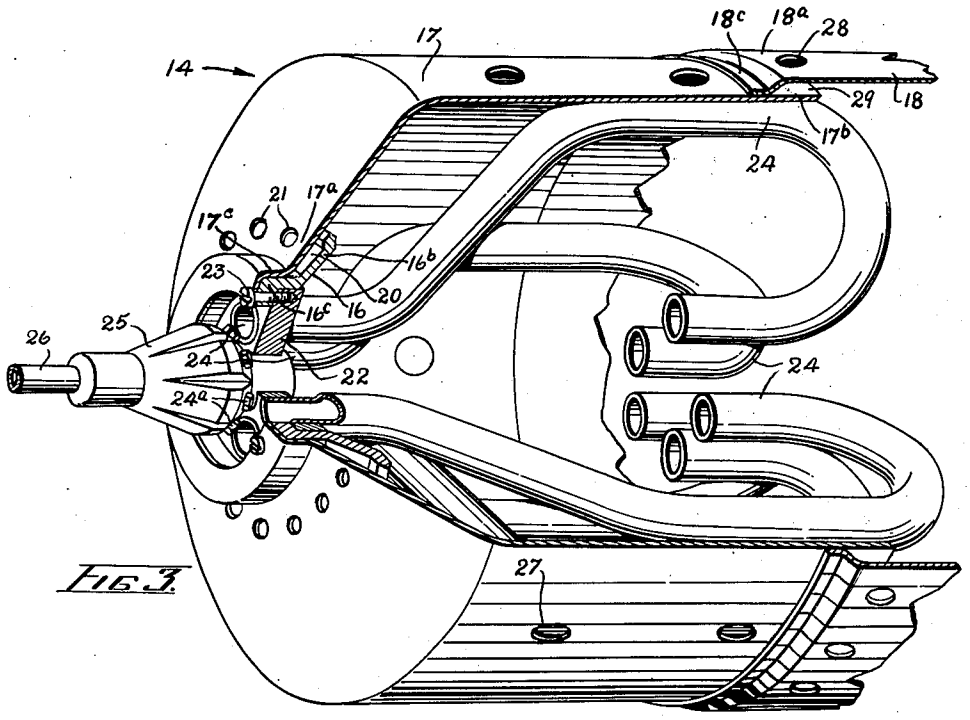

FIG 3.

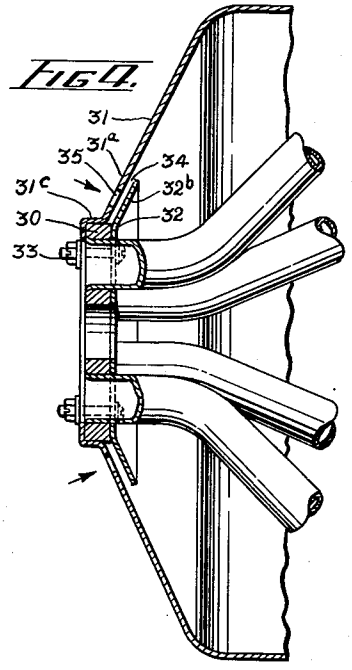

FIG 4.

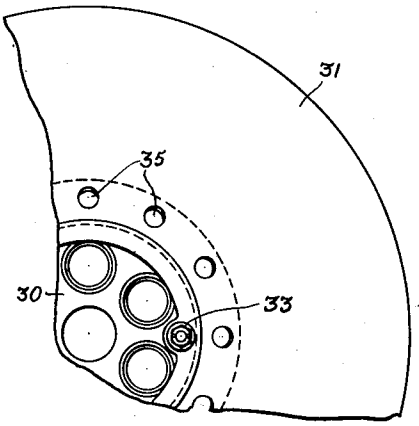

FIG 5.

INVENTOR
D.E.MORRISON
PER
ATTORNEY

Patented Sept. 30, 1952 2,612,023

UNITED STATES PATENT OFFICE

2,612,023

COOLING OF GAS TURBINE ENGINE FLAME TUBES

Donald Ewan Morrison, Nobel, Ontario, Canada, assignor to A. V. Roe Canada Limited, Peel, Ontario, Canada, a corporation

Application December 23, 1950, Serial No. 202,446

10 Claims. (Cl. 60—39.65)

1

This invention relates to combustion systems for aircraft gas turbine engines and more particularly to a flame tube construction which is cooled by a film of air.

Combustion of the fuel and air mixture in a gas turbine engine takes place within flame tubes provided for the purpose, and since considerable heat is generated in the process, the flame tube is frequently overheated. Moreover, in the type of combustion chamber embodying a system for pre-vapourizing the fuel and injecting it upstream into the flame tube, there is the additional problem of excessive deposition of carbon on the flame tube walls. A suggested solution to these problems has been the introduction of a film of cooling air in the flame tube, which flows along its internal wall, to insulate it from the adjacent combustion flame; however the proposals heretofore advanced for providing such a film of cooling air have invariably resulted in an undesirable increase in weight of the combustion chamber assembly and have produced a film interrupted by the wakes of the various spacing means employed in the annular openings through which the air has been admitted.

Accordingly, it is the main object of this invention to provide means for directing an unbroken film of cooling air on the internal walls of a flame tube, without materially increasing the weight of the combustion chamber assembly.

The above object and other objects and advantages of the invention will be apparent from a study of the following description, taken in conjunction with the accompanying drawings, in which like reference characters indicate corresponding parts throughout the several views, and in which:

Figure 1 is a broken-away side elevation of a typical gas turbine engine in which is incorporated a combustion system constructed in accordance with the invention;

Figure 2 is a sectional side elevation of one of the combustion chambers shown in Figure 1;

Figure 3 is a broken-away perspective of the flame tube provided in the combustion chamber; and

Figures 4 and 5 are respectively a fragmentary sectional side elevation and a fragmentary end elevation of an alternative flame tube construction made in accordance with the invention.

Referring to the drawings, a gas turbine engine comprises a compressor 10, a turbine 11 for driving the compressor, combustion chambers 12 disposed in series therebetween, and a tail cone 13. Each combustion chamber includes a flame tube

2

14 surrounded in spaced relationship by a coaxial casing 15; thus there is an annular space between the flame tube and the casing.

In the embodiment of the invention illustrated in Figs. 2 and 3, the flame tube 14 is provided by a plurality of hollow coaxial members disposed in longitudinal serial relationship. These include the members 16, 17, 18 and 19 which are so arranged that the upstream and downstream terminal portions of adjacent members are in spaced overlapping relationship. Considering, as an example, the upstream or inner member 16 and the adjacently downstream or outer member 17, it will be noted that the upstream terminal portion 17a of outer member 17 is in spaced overlapping relationship with respect to the downstream terminal portion 16b of inner member 16, and thus an annular gap 20 is provided therebetween. The upstream end 17c of the outer member and the upstream end 16c of the inner member bear against each other to provide a closure for the upstream end of the gap 20. A plurality of holes 21 are formed in the upstream terminal portion 17a of the outer member 17 opposite the downstream terminal portion 16b of the inner member to provide admission inlets for air from the space between the casing and the flame tube, the said air flowing into the flame tube through the gap 20.

A tube plate 22 is circumferentially engaged in a recess provided in the upstream terminal portion 16a of the inner member 16, the tube plate, the inner member and the outer member 17 being secured together by screws 23. Supported at one end by the tube plate are symmetrically arranged vapourizer tubes 24 of any suitable type, which extend into the interior of the flame tube. Centrally mounted in the tube plate is a burner 25 supplied with fuel from an external source (not shown) by a pipe 26. The burner is provided with a series of jets 24a to eject fuel into the registering vapourizer tubes 24.

When the engine is in operation, air is drawn into the compressor 10 where its pressure is raised, and it is then passed to the combustion chambers 12 where it is mixed with fuel and the mixture is burned; the products of combustion expand and are finally exhausted from the tail cone 13 in a propulsive jet, a fraction of their energy being expended in driving the turbine 11 which in turn drives the compressor 10.

A portion of the compressed air entering each combustion chamber 12 enters the flame tube 14 through the vapourizer tubes 24, another portion enters the flame tube through the holes 21

and the remaining portion flows through the annular space between the outer casing 15 and the flame tube and enters the flame tube through the apertures 27. The air which enters the flame tubes through the holes 21 impinges on the downstream terminal portion 16b of the inner member 16 and is deflected thereby so that it spreads in the gap 20 to form an uninterrupted film; this film then flows in a downstream direction and along the inner surface of the outer member 17 thereby cooling the said member and insulating it from the adjacent combustion flame; eventually it is exhausted with the products of combustion.

A similar but more simple arrangement can be applied to the other junctions of the members, such as the junction of members 17 and 18, which will be the only one described, since the junction of members 18 and 19 would be similar. Holes 28 are provided in the upstream terminal portion 18c of the member 18 opposite the downstream terminal portion 17b of the member 17, and the upstream end 18c of the member 18 is swaged inwardly and welded to the member 17 to provide a closure for the upstream end of the gap 29. It will be apparent that, relatively to each other, members 17 and 18 are respectively inner and outer members; likewise, members 18 and 19 are respectively inner and outer members. Although it has been found that the invention is most advantageously applied where the direction of the airstream in the annular space surrounding the flame tube is at a significant angle to the wall of the outer member, nevertheless, in locations such as the junction of the members 17 and 18, in which the wall of the member 18 is substantially parallel to the direction of the air stream, the invention is also advantageous.

The alternative embodiment of the invention illustrated in Figs. 4 and 5 is essentially similar to the previously described embodiment; the only difference between the two constructions is in the details of the respective tube plates and adjacent members and the manner in which they interengage. In the said alternative embodiment a tube plate 30 is circumferentially supported by the upstream end 31c of outer member 31, and the inner member 32 is supported by the tube plate and secured thereto and to the outer member by means of nut and bolt assemblies 33. As in the previously described embodiment, the downstream terminal portion 32b of the inner member 32 and the upstream terminal portion 31a of the outer member 31 are in spaced overlapping relationship to provide an annular gap 34 therebetween and a plurality of holes 35 is formed in the upstream terminal portion 31a of the outer member opposite the downstream terminal portion 32b of the inner member to provide admission inlets for air into the flame tube; the tube plate provides a closure at the upstream end of the gap.

In the invention disclosed and claimed, the major essential departure from prior art constructions has been the addition of inner member 16 (or 32) and the incorporation of holes 21 (or 35) in the outer member opposite the downstream terminal portion of the inner member, in order to provide a uniform and uninterrupted film of cooling air over the walls of the flame tube. It will therefore be apparent that this cooling is achieved with substantially no weight penalty and with no interruption in the insulating properties of the film.

It is to be understood that the forms of the

invention herewith shown and described are to be taken as preferred embodiments of the same, and that various changes in the shape, size and arrangement of the parts may be made without departing from the spirit of the invention or the scope of the subjoined claims.

What I claim as my invention is:

1. In a combustion chamber for a gas turbine engine, through which a stream of air is constrained to flow, a flame tube, a casing surrounding the flame tube in spaced relationship thereto and providing a space between the flame tube and the casing, the said flame tube having a wall including inner and outer hollow coaxial members disposed in longitudinal serial relationship, the downstream terminal portion of the inner member and the upstream terminal portion of the outer member being in spaced overlapping relationship to provide an annular gap therebetween, and a closure at the upstream end of the gap, a plurality of holes being formed in the upstream terminal portion of the outer member opposite the downstream terminal portion of the inner member to provide admission inlets for air from the space between the casing and the flame tube into the flame tube through the gap.

2. In a combustion chamber for a gas turbine engine, through which a stream of air is constrained to flow, a flame tube, a casing surrounding the flame tube in spaced relationship thereto and providing a space between the flame tube and the casing, the said flame tube having a wall including inner and outer hollow coaxial members disposed in longitudinal serial relationship, the downstream terminal portion of the inner member and the upstream terminal portion of the outer member being in spaced overlapping relationship to provide an annular gap therebetween, a closure at the upstream end of the gap, a plurality of holes being formed in the upstream terminal portion of the outer member opposite the downstream terminal portion of the inner member to provide admission inlets for air from the space between the casing and the flame tube into the flame tube through the gap, a plate disposed within and supported by the upstream terminal portion of one of said members, and fuel supplying means supported by the plate and discharging into the flame tube.

3. In a combustion chamber for a gas turbine engine, through which a stream of air is constrained to flow, a flame tube, a casing surrounding the flame tube in spaced relationship thereto and providing a space between the flame tube and the casing, the said flame tube having a wall including inner and outer hollow coaxial members disposed in longitudinal serial relationship, the downstream terminal portion of the inner member and the upstream terminal portion of the outer member being in spaced overlapping relationship to provide an annular gap therebetween, a closure at the upstream end of the gap, a plurality of holes being formed in the upstream terminal portion of the outer member opposite the downstream terminal portion of the inner member to provide admission inlets for air from the space between the casing and the flame tube into the flame tube through the gap, a plate disposed within and supported by the upstream terminal portion of the inner member, and fuel supplying means supported by the plate and discharging into the flame tube.

4. In a combustion chamber for a gas turbine engine, through which a stream of air is con-

strained to flow, a flame tube, a casing surrounding the flame tube in spaced relationship thereto and providing a space between the flame tube and the casing, the said flame tube having a wall including inner and outer hollow coaxial members disposed in longitudinal serial relationship, the downstream terminal portion of the inner member and the upstream terminal portion of the outer member being in spaced overlapping relationship to provide an annular gap therebetween, the upstream end of the inner member bearing against the upstream end of the outer member to provide a closure for the upstream end of the gap, a plurality of holes being formed in the upstream terminal portion of the outer member opposite the downstream terminal portion of the inner member to provide admission inlets for air from the space between the casing and the flame tube into the flame tube through the gap.

5. In a combustion chamber for a gas turbine engine, through which a stream of air is constrained to flow, a flame tube, a casing surrounding the flame tube in spaced relationship thereto and providing a space between the flame tube and the casing, the said flame tube having a wall including inner and outer hollow coaxial members disposed in longitudinal serial relationship, the downstream terminal portion of the inner member and the upstream terminal portion of the outer member being in spaced overlapping relationship to provide an annular gap therebetween, a plate disposed transversely of the longitudinal axis of the flame tube, the said plate being in engagement with and supported by the upstream end of the upstream terminal portion of the outer member and also being in engagement with the upstream terminal portion of the inner member to close the upstream end of the gap, fuel supplying means supported by the plate and discharging into the flame tube, a plurality of holes being formed in the upstream terminal portion of the outer member opposite the downstream terminal portion of the inner member to provide admission inlets for air from the space between the casing and the flame tube into the flame tube through the gap.

6. In a combustion chamber for a gas turbine engine, through which a stream of air is constrained to flow, a flame tube, a casing surrounding the flame tube in spaced relationship thereto and providing a space between the flame tube and the casing, the said flame tube having a wall including inner and outer hollow coaxial members disposed in longitudinal serial relationship, the downstream terminal portion of the inner member and the upstream terminal portion of the outer member being in spaced overlapping relationship to provide an annular gap therebetween, the upstream end of the inner member bearing against the upstream end of the outer member to provide a closure for the upstream end of the gap, a plurality of holes being formed in the upstream terminal portion of the outer member opposite the downstream terminal portion of the inner member to provide admission inlets for air from the space between the casing and the flame tube into the flame tube through the gap, a plate disposed within and supported by the upstream terminal portion of one of said members, and fuel supplying means supported by the plate and discharging into the flame tube.

7. In a combustion chamber for a gas turbine engine, through which a stream of air is constrained to flow, a flame tube, a casing surrounding the flame tube in spaced relationship thereto and providing a space between the flame tube and the casing, the said flame tube having a wall including inner and outer hollow coaxial members disposed in longitudinal serial relationship, the downstream terminal portion of the inner member and the upstream terminal portion of the outer member being in spaced overlapping relationship to provide an annular gap bounded by the outer side of the inner member and the inner side of the outer member, the outer side of the upstream terminal portion of the inner member at its upstream end bearing against the inner side of the upstream terminal portion of the outer member at its upstream end to provide a closure for the upstream end of the gap, a plurality of holes being formed in the upstream terminal portion of the outer member opposite the downstream terminal portion of the inner member to provide admission inlets for air from the space between the casing and the flame tube into the flame tube through the gap, a plate circumferentially supported by the inner side of the upstream terminal portion of one of said members, and fuel supplying means supported by the plate and discharging into the flame tube.

8. In a combustion chamber for a gas turbine engine, through which a stream of air is constrained to flow, a flame tube, a casing surrounding the flame tube in spaced relationship thereto and providing a space between the flame tube and the casing, the said flame tube having a wall including inner and outer hollow coaxial members disposed in longitudinal serial relationship, the downstream terminal portion of the inner member and the upstream terminal portion of the outer member being in spaced overlapping relationship to provide an annular gap bounded by the outer side of the inner member and the inner side of the outer member, the outer side of the upstream terminal portion of the inner member at its upstream end bearing against the inner side of the upstream terminal portion of the outer member at its upstream end to provide a closure for the upstream end of the gap, a plurality of holes being formed in the upstream terminal portion of the outer member opposite the downstream terminal portion of the inner member to provide admission inlets for air from the space between the casing and the flame tube into the flame tube through the gap, a plate circumferentially supported by the inner side of the upstream terminal portion of the inner member, and fuel supplying means supported by the plate and discharging into the flame tube.

9. In a combustion chamber for a gas turbine engine, through which a stream of air is constrained to flow, a flame tube, a casing surrounding the flame tube in spaced relationship thereto and providing a space between the flame tube and the casing, the said flame tube having a wall including inner and outer hollow coaxial members disposed in longitudinal serial relationship, the downstream terminal portion of the inner member and the upstream terminal portion of the outer member being in spaced overlapping relationship to provide an annular gap bounded in part by the outer side of the inner member and the inner side of the outer member, a plurality of holes being formed in the upstream terminal portion of the outer member opposite the downstream terminal portion of the inner member to provide admission inlets for air from the space between the casing and the flame tube into the flame tube through the

gap, a plate circumferentially supported by the inner side of the upstream terminal portion of the outer member, the inner member being secured to and supported by the plate, the peripheral portion of the plate providing a closure for the upstream end of the gap, and fuel supplying means supported by the plate and discharging into the flame tube.

10. In a combustion chamber for a gas turbine engine, through which a stream of air is constrained to flow, a flame tube, a casing surrounding the flame tube in spaced relationship thereto and providing a space between the flame tube and the casing, the said flame tube having a wall including inner and outer hollow coaxial members disposed in longitudinal serial relationship, the downstream terminal portion of the inner member and the upstream terminal portion of the outer member being in spaced overlapping relationship to provide an annular gap bounded by the outer side of the inner member and the inner side of the outer member, the outer side of the upstream terminal portion of the inner member at its upstream end bearing against the inner side of the upstream terminal portion of the outer member at its upstream end to provide a closure for the upstream end of the gap, a plurality of holes being formed in the upstream terminal portion of the outer member opposite the downstream terminal portion of the inner member to provide admission inlets for air from the space between the casing and the flame tube into the flame tube through the gap, an annular recess in the inner side of the upstream terminal portion of the inner member, a plate circumferentially engaged in the recess for support by the inner member, and fuel supplying means supported by the plate and discharging into the flame tube.

DONALD EWAN MORRISON.

REFERENCES CITED

The following references are of record in the file of this patent:

UNITED STATES PATENTS

Number	Name	Date
2,448,561	Way	Sept. 7, 1948
2,477,584	Zubay	Aug. 2, 1949
2,545,495	Sforzini	Mar. 20, 1951