(No Model.) 2 Sheets—Sheet 1.

W. YELLOWLEY.

CIGAR BUNCHING MACHINE.

No. 590,180. Patented Sept. 14, 1897.

Fig. 1.

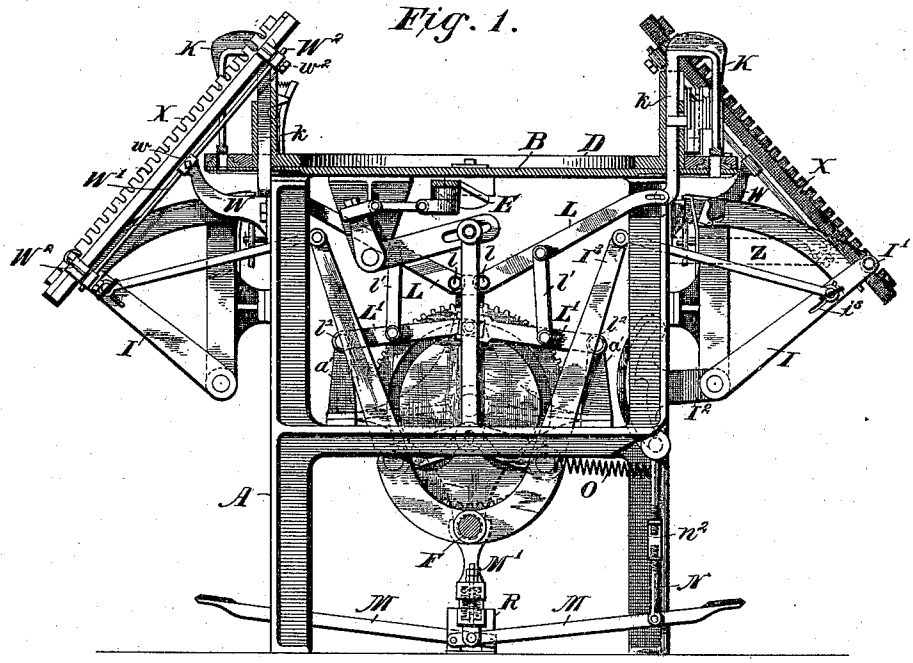

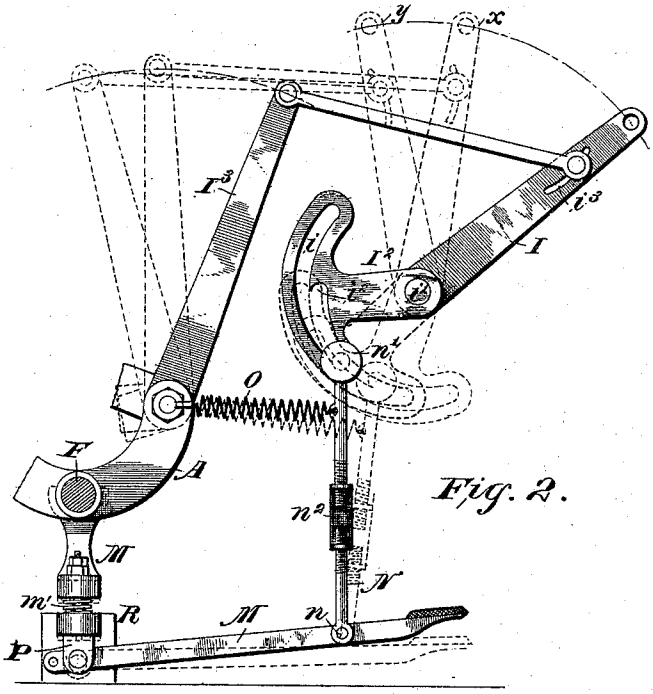

Fig. 2.

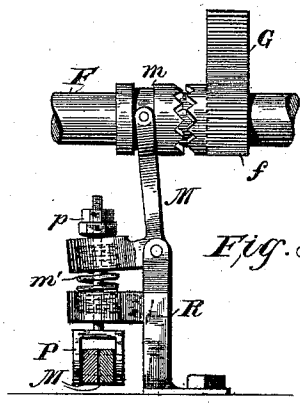

Fig. 3.

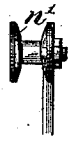

Fig. 2ª.

Witnesses
Lucius G. Julihn
Grace Woodman.

Inventor
William Yellowley
By Geo. P. Whittemore
Attorney

THE NORRIS PETERS CO., PHOTO-LITHO., WASHINGTON, D. C.

(No Model.) 2 Sheets—Sheet 2.

W. YELLOWLEY.

CIGAR BUNCHING MACHINE.

No. 590,180. Patented Sept. 14, 1897.

Fig. 4.

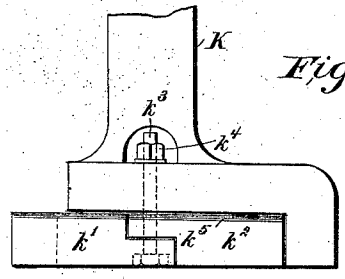

Fig. 5.

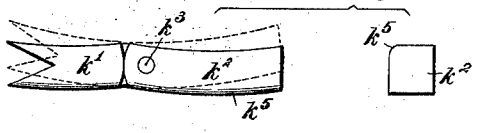

Fig. 6.

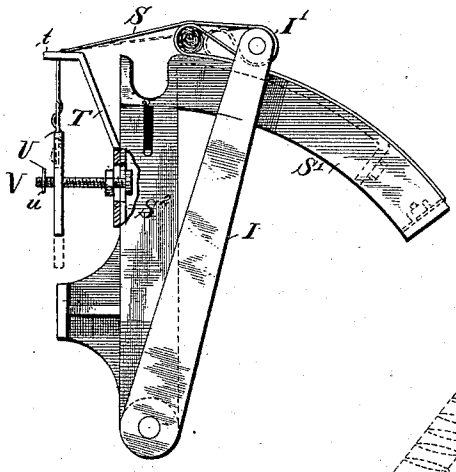

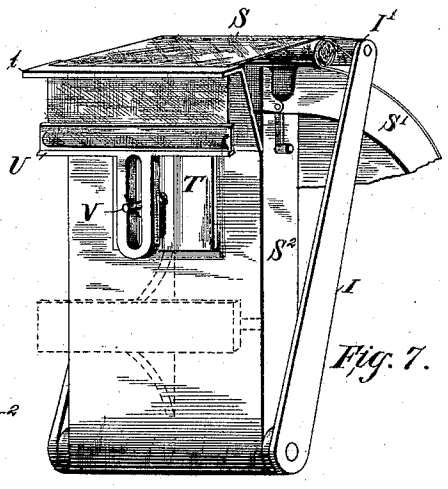

Fig. 7.

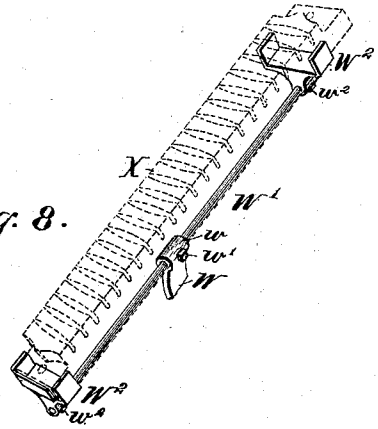

Fig. 8.

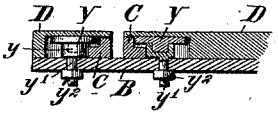

Fig. 9.

Witnesses
Louis G. Julihn
Grace Goodman.

Inventor
William Yellowley
By Geo. P. Whittlesey
Attorney

THE NORRIS PETERS CO., PHOTO-LITHO., WASHINGTON, D. C.

UNITED STATES PATENT OFFICE.

WILLIAM YELLOWLEY, OF ALLEGHENY, PENNSYLVANIA.

CIGAR-BUNCHING MACHINE.

SPECIFICATION forming part of Letters Patent No. 590,180, dated September 14, 1897.

Application filed October 21, 1896. Serial No. 609,599. (No model.)

To all whom it may concern:

Be it known that I, WILLIAM YELLOWLEY, a citizen of the United States, residing at Allegheny, in the county of Allegheny and State of Pennsylvania, have invented certain new and useful Improvements in Cigar-Bunching Machines; and I do declare the following to be a full, clear, and exact description of the invention, such as will enable others skilled in the art to which it appertains to make and use the same, reference being had to the accompanying drawings, and to the letters of reference marked thereon, which form a part of this specification.

My invention relates to cigar-bunching machines; and it consists in certain improvements in the machine patented to myself and Charles Meyer on June 30, 1896, No. 563,115.

My improvements relate to the mechanism for actuating the rams, to the automatic stop-motion, to the construction of the rams themselves, to the rolling-apron, to the moldboard-racks, and to the guide-rollers for the feeding-rings.

In the drawings, Figure 1 is a side elevation of my improved machine, certain portions being shown in section. Fig. 2 is an enlarged view of the stop-motion. Fig. 2^a is a detail. Fig. 3 is a detail showing the clutch. Fig. 4 is the front elevation of the lower end of a ram. Fig. 5 is a plan and end view of the movable sections of the ram. Fig. 6 is a side elevation of one of the rolling-tables. Fig. 7 is a perspective view of the same. Fig. 8 shows one of the adjustable mold-racks, and Fig. 9 is a section showing the adjustable guide-rollers.

The principal parts of the machine are the same as those in the patent above referred to—that is, the frame A carries a flat table B, on which are supported the concentric feeding-rings C, movable under guides D. The feeding-pawls are actuated by a lever E. The main shaft F has a pinion *f*, meshing with the gear-wheel G, which carries the grooved disk or cam H, by means of which the radius-arms I are vibrated to operate the bunching-rollers I'. The rams K are vertically movable and serve to force the charges of tobacco from between the feeding-rings into the rolling-apron.

One of my improvements consists in the mechanism for actuating the rams, as shown in Fig. 1. I dispense with the triangular cross-head shown in the patent mentioned and in place of it I provide two levers L, fulcrumed at *l* on a bracket *a* and having their outer ends slotted to engage with pins in the lower ends of the plungers *k*, to which the rams are attached. The levers L are connected by links *l'* with rock-arms L', fulcrumed at l^2 on brackets *a'* and having their inner ends connected by a pin and slot, so as to permit vertical movement. The pin is engaged by the cam H, and in this way the cam is enabled to impart a vibratory movement to the levers L to actuate the rams.

Another and an important improvement is the stop-motion. (Shown in Figs. 2 and 3.) One of the radius-arms I on one side of the machine is provided with an extension or elbow I^2, in which is a curved slot *i*, concentric with the pivot *i'* of the radius-arms. Near the middle the slot is widened, forming a notch i^2 on one side. The treadle M, which operates the clutch *m*, has a rod N hinged to it at *n* and carrying at its upper end a pin or roller *n'*, engaging with the slot *i*. The rod is adjustable in length, as by means of a turnbuckle n^2. Means are provided to keep the pin or roller *n'* pressed yieldingly toward that side of the slot *i* opposite to the notch i^2. This may be a helical spring O, fastened at one end to the frame A and at the other to the rod N, as shown.

The two treadles M are both pivoted to a clevis P, which passes through a stationary bracket R, and an elbow-lever M', fulcrumed thereon. Nuts *p* secure the clevis to the elbow-lever, and a helical spring *m'*, seated in sockets in the bracket R and elbow-lever M', tends to lift the elbow-lever, the clevis, and the treadles. The upper end of the elbow-lever is forked to engage with the movable portion of the clutch *m*, as clearly shown in Fig. 3. The spring tends to hold the clutch closed until pressure on either one of the treadles opens it.

The stop-motion operates as follows: After the charge has been rolled and the radius-arms I are returning to an upright position they reach a point (see dotted lines *x* in Fig. 2) where the notch i^2 engages with the pin or roller *n'* and begins to push down upon the

rod N. This movement continues until the radius-arms have reached the limit of their upward throw, (see position *y* in Fig. 2,) at which time the treadle M will have been forced down to the dotted-line position in Fig. 2 and the spring O will have been put under tension, as clearly indicated. This depressing of the treadle opens the clutch *m* and stops the machine, giving the operator time to remove the rolled bunch and to place a fresh binder on the rolling-apron. This having been done a slight pressure of the foot upon the treadle pulls the pin or roller *n'* down out of the notch i^2, when the spring O at once draws the rod toward the frame A and keeps the pin or roller *n'* away from the notch, while the spring *m'* closes the clutch and lifts the treadle, the pin or roller *n'* riding up the slot *i*. Upon the closing of the clutch the machine starts and another bunch is rolled.

Inasmuch as the space between the feeding-rings is curved, while the groove in the rolling-table which receives the charge is straight, I have provided the ram K with a head made in two parts *k'* and k^2, each adapted to move laterally—as, for instance, by being jointed together at or near the middle of the ram by a bolt k^3, which is secured by a nut k^4, resting in an opening cut in the ram. The parts *k'* k^2 are thus free to turn on the bolt in a direction transverse to the line of movement of the ram. When the ram descends, these parts are swung into the position shown in full lines in Fig. 5 by coming in contact with the walls of the groove in the rolling-table. When the ram rises, the parts are returned to their original dotted-line position by reason of the curved shape of the slot in the table B, through which the ram plays. To facilitate their return movement, I prefer to bevel or chamfer off the upper outer corners of the parts *k'* k^2, as shown at k^5.

The rolling-apron S is attached at its outer end to the rolling-table S'. The apron passes loosely over the roller I', and in the patent above mentioned is firmly attached to the socket S^2, which supports the table S'. I have found it desirable, however, to be able to roll bunches of different sizes, and in order to accomplish this with the same table and apron I provide its inner end with an adjustable fastening. The one I prefer is shown in Figs. 6 and 7. The apron passes through a slot in the horizontal flange *t* of a metal plate T, secured to the rear of the socket S^2. To the end of the apron is attached a weight U, preferably T-shaped, the stem of the T being slotted to receive a stud V, which projects from the socket and is vertically adjustable in a vertical slot therein. A pin *v* in the outer end of the stud retains the weight U in place. The slot in the weight allows the apron to be pulled up by the action of the bunching-roller, and the position of the stud V determines the amount of slack in the apron. When a smaller bunch is to be rolled, the stud is lowered, and, vice versa, it is raised when more slack is required for a larger bunch. In every case the weight U keeps the apron taut and insures a good tight bunch. The range of movement of the rollers I' can be varied also by means of the slots i^3, which afford an adjustable connection of the radius-arms with their operating-levers I^3.

My moldboard-support is shown in Figs. 1 and 8. It consists of an arm W, secured to the frame of the machine near the ram, and having an inclined sleeve *w*. A rod W' passes through the sleeve and is adjustable lengthwise therein by means of a set-screw *w'*. At each end of the rod is a bracket W^2, adjustable on the rod by means of set-screws w^2. The brackets are adapted to receive and hold the moldboards X, as shown.

In order to provide for better adjustment of the feeding-rings C and also to take up wear, I arrange guide-rollers Y inside and outside of the rings, mounted to rotate on stationary studs *y*, which have stems *y'* eccentric to the studs. These stems pass through the table B and are secured by nuts y^2. This construction enables the studs to be set in or out to adjust the position of the rings C and to take up wear.

The machine may be provided with shelves for holding the binders, one near each rolling-table, as indicated by dotted lines in Fig. 1 at Z.

Having thus described my invention, what I claim, and desire to secure by Letters Patent, is—

1. In a cigar-bunching machine, the combination with the frame A, of brackets *a a'* fastened thereto, levers L fulcrumed on the bracket *a*, rock-arms L' fulcrumed on the brackets *a'*, links *l'* connecting the rock-arms with the levers, a disk H having a cam-groove engaging with the free ends of the rock-arms, and rams engaged by the free ends of the levers, substantially as described.

2. The combination with a cigar-bunching machine, of a clutch controlling the main shaft, a spring holding said clutch normally closed, a treadle, and operative connections between said clutch and the bunch-rolling mechanism whereby said clutch is opened and the treadle is depressed at the completion of a bunch, substantially as described.

3. The combination with a cigar-bunching machine, of a clutch controlling the main shaft, a treadle for operating said clutch, an extension on one of the radius-arms provided with a notch, a rod connected with the treadle and adapted to be engaged with said notch, and means for disengaging said rod therefrom, substantially as described.

4. The combination with a cigar-bunching machine, of a clutch controlling the main shaft, a spring for closing said clutch, a treadle for opening said clutch, an extension on one of the radius-arms containing an arc-shaped slot having a notch on one side, a rod connected with the treadle and carrying a pin or roller engaging with said slot, and a spring

acting to force the rod away from the notch, substantially as described.

5. In a cigar-bunching machine, a ram provided with a head made in two parts, each adapted to move transversely to the line of motion of the ram, substantially as described.

6. In a cigar-bunching machine, a ram provided with a head made in two parts k' k^2 jointed together on a bolt k^3, and having their upper outer corners chamfered off at k^5, substantially as described.

7. In a cigar-bunching machine, the combination with a rolling-apron, of a slotted T-shaped weight attached to one end thereof, and an adjustable stud engaging with the slot in said weight, substantially as described.

8. In a cigar-bunching machine, the combination with the rolling-apron S, the rolling-table S', and the socket S^2, of a plate T secured to said socket and having a slotted flange t, a T-shaped weight U attached to the apron and having a slot in the stem of the T, and a stud V adjustable vertically on the socket S^2 and passing through the slot in the weight, substantially as described.

9. In a cigar-bunching machine, an arm secured to the frame and having a sleeve, a rod adjustable lengthwise in said sleeve, and brackets adjustably mounted on said rod, and adapted to support a cigar-moldboard, substantially as described.

10. In a cigar-bunching machine, the combination with concentric feeding-rings, of a table supporting the same, guide-rollers bearing against the rings, and studs supporting said rollers and having eccentric stems secured to said table, substantially as described.

In testimony whereof I affix my signature in presence of two witnesses.

WILLIAM YELLOWLEY.

Witnesses:
JOSEPH CHOFFAT,
RALPH BAILEY.