(12) INTERNATIONAL APPLICATION PUBLISHED UNDER THE PATENT COOPERATION TREATY (PCT)

(19) World Intellectual Property Organization
International Bureau

(43) International Publication Date
23 June 2011 (23.06.2011)

PCT

(10) International Publication Number
WO 2011/075509 A1

(51) International Patent Classification:
A61B 1/018 (2006.01) *A61B 1/273* (2006.01)

(21) International Application Number:
PCT/US2010/060438

(22) International Filing Date:
15 December 2010 (15.12.2010)

(25) Filing Language: English

(26) Publication Language: English

(30) Priority Data:
61/288,060 18 December 2009 (18.12.2009) US
61/288,259 18 December 2009 (18.12.2009) US
61/288,050 18 December 2009 (18.12.2009) US

(71) Applicant *(for all designated States except US)*: **WILSON-COOK MEDICAL INC.** [US/US]; P.O. Box 27115-4191, 4900 Bethania Station Road, Winston-Salem, NC 27105-4191 (US).

(72) Inventor; and

(75) Inventor/Applicant *(for US only)*: **SURTI, Vihar, C.** [US/US]; 103 Cheswyck Lane, Winston-Salem, NC 27104 (US).

(74) Agent: **MILZ, Michael, E.**; Brinks Hofer Gilson & Lione, P.O. Box 10087, Chicago, IL 60610 (US).

(81) Designated States *(unless otherwise indicated, for every kind of national protection available)*: AE, AG, AL, AM, AO, AT, AU, AZ, BA, BB, BG, BH, BR, BW, BY, BZ, CA, CH, CL, CN, CO, CR, CU, CZ, DE, DK, DM, DO, DZ, EC, EE, EG, ES, FI, GB, GD, GE, GH, GM, GT, HN, HR, HU, ID, IL, IN, IS, JP, KE, KG, KM, KN, KP, KR, KZ, LA, LC, LK, LR, LS, LT, LU, LY, MA, MD, ME, MG, MK, MN, MW, MX, MY, MZ, NA, NG, NI, NO, NZ, OM, PE, PG, PH, PL, PT, RO, RS, RU, SC, SD, SE, SG, SK, SL, SM, ST, SV, SY, TH, TJ, TM, TN, TR, TT, TZ, UA, UG, US, UZ, VC, VN, ZA, ZM, ZW.

(84) Designated States *(unless otherwise indicated, for every kind of regional protection available)*: ARIPO (BW, GH, GM, KE, LR, LS, MW, MZ, NA, SD, SL, SZ, TZ, UG, ZM, ZW), Eurasian (AM, AZ, BY, KG, KZ, MD, RU, TJ, TM), European (AL, AT, BE, BG, CH, CY, CZ, DE, DK, EE, ES, FI, FR, GB, GR, HR, HU, IE, IS, IT, LT, LU, LV, MC, MK, MT, NL, NO, PL, PT, RO, RS, SE, SI, SK, SM, TR), OAPI (BF, BJ, CF, CG, CI, CM, GA, GN, GQ, GW, ML, MR, NE, SN, TD, TG).

[Continued on next page]

(54) Title: ENDOSCOPE CAP WITH RAMP

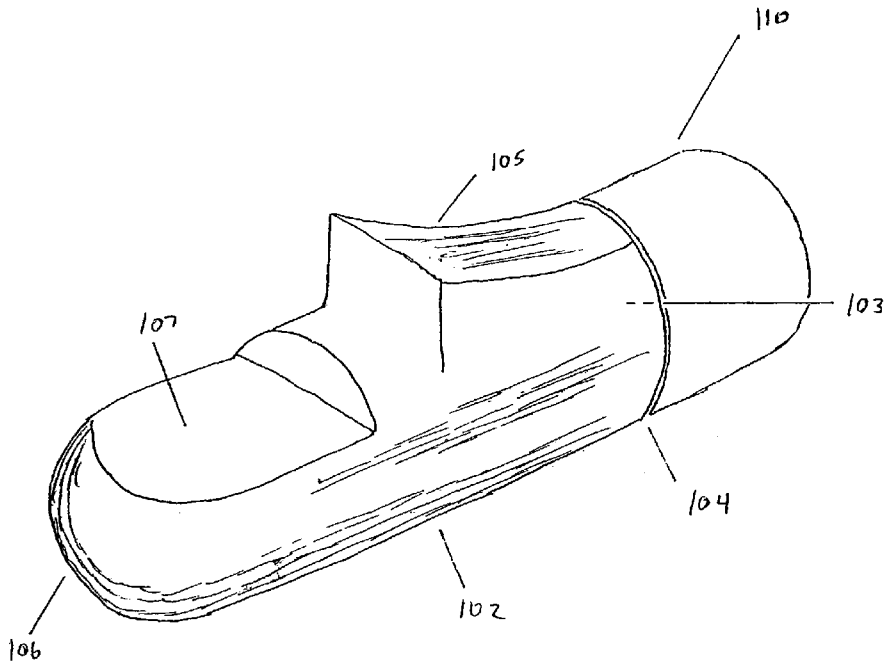

FIG. 1B

(57) Abstract: An endoscope cap is provided for directing medical devices toward a selected target anatomy in a patient. The endoscope cap includes a ramp that may be used to deflect medical devices that have been advanced from a proximal portion of an endoscope to a distal portion thereof. The ramp may be integral with the endoscope cap, or alternatively, may be pivotally attached thereto.

WO 2011/075509 A1

Published:

— *with international search report (Art. 21(3))*

— *before the expiration of the time limit for amending the claims and to be republished in the event of receipt of amendments (Rule 48.2(h))*

ENDOSCOPE CAP WITH RAMP

TECHNICAL FIELD

[0001] The present invention relates to medical devices, and more particularly to an endoscope cap with a ramp.

BACKGROUND OF THE INVENTION

[0002] Physicians use endoscopes during minimally invasive procedures to visualize the patient anatomy, diagnose various conditions, and deliver instrumentation to the treatment site. Devices are typically delivered via a working channel of the endoscope, which generally ranges from about 2.0 to 3.5 mm in diameter, and may be used to introduce catheters and other elongate devices, including forceps, scissors, brushes, snares, and baskets. Larger working channels of 5.0 mm in diameter are available in certain specialized endoscopes, and may be used to pass relatively large devices or provide capability for improved aspiration or decompression. Some devices, however, are simply too large to pass through available endoscopes. Moreover, the specialized endoscopes with larger working channels can be expensive, as well as difficult to intubate due to increased rigidity and outer diameter.

[0003] Devices too large for the endoscope working channel must be introduced through an alternate, and often more invasive procedure, such as laparoscopy or open surgery. Laparoscopic surgery involves creating 0.5-1.5 cm incisions in a patient's abdominal wall so that a laparoscope and other instruments can be introduced into the abdominal and pelvic cavities. Open surgery generally involves creating one or more long incisions in a patient, followed by extensive muscle stripping, prolonged retraction of tissues, denervation and devascularization of tissue. While effective at introducing larger devices, laparoscopic and open surgical procedures can increase the risk of complications and trauma to the patient, as well as extend recovery time and hospital stays.

[0004] What is needed are devices and methods for endoscopic introduction of medical devices too large for the endoscope working channel without necessitating the use of invasive procedures. Specifically, devices and methods are needed for introduction of medical devices alongside and external to an endoscope.

SUMMARY

[0005] The present disclosure generally provides a cap configured to attach to the distal end of an endoscope, preferably a duodenoscope. The cap may be used to aid in the delivery of devices to a selected target area in the anatomy of a patient. Preferably, the cap is used in conjunction with a system for advancing devices alongside an endoscope. Once a device reaches a distal portion of the endoscope, the cap may be used to deflect the device toward a selected target area, such as the pancreatic duct. In one embodiment, the cap can be used with a tether system used for pulling devices down alongside an endoscope. The tether system may include a guiding member for advancing devices beyond a distal portion of the endoscope. In another embodiment, the cap may be used in conjunction with a sheath system used for advancing devices down alongside an endoscope. In another embodiment, the cap, the tether, and the sheath may be used in combination.

[0006] In one aspect, an endoscope cap is provided for deflecting devices toward a selected target anatomy. The endoscope cap includes a body comprising a proximal end and a distal end. The endoscope cap also includes a first aperture disposed at the proximal end and configured to receive a distal portion of an endoscope. The endoscope cap further includes a first ramp disposed between the proximal end and the distal end. The first ramp projects outwardly from the body, and is configured to deflect a medical device disposed externally to the endoscope in a direction away from the endoscope. Preferably, the cap includes a second aperture disposed proximal to the distal end, and is configured to accommodate an aperture of a working channel of the endoscope.

[0007] In one embodiment, the first ramp is integral with the body.

[0008] In another embodiment, the first ramp is pivotally attached to the body and may pivot from a first configuration to a second configuration. The first ramp may include a first transverse passageway and a second transverse passageway disposed through the ramp. The endoscope cap may include a ramp turning support attached to the body and partially disposed through the first transverse passageway. The endoscope cap may include a second ramp disposed proximal to the first ramp and may be configured to direct a device toward the first ramp.

[0009] In one embodiment, the endoscope cap includes a coupling member configured to couple with an endoscope sheath lumen. Preferably, the endoscope sheath lumen is configured for advancing devices from a proximal portion of an endoscope to a distal portion of the endoscope. The coupling member may include a coupling member proximal portion

and a coupling member distal portion. The coupling member may further include a coupling member lumen extending from the coupling member proximal portion to the coupling member distal portion. Preferably, the coupling member lumen is open at both ends and is aligned with the first ramp. The coupling member proximal portion may include an outer surface configured to frictionally engage an inner surface of the endoscope sheath lumen.

[0010] In another aspect, an advancing system is provided for advancing devices toward a selected target anatomy. The advancing system includes an endoscope having a proximal portion and a distal portion. The advancing system further includes an endoscope cap including a first ramp configured to engage and deflect an elongate device advanced along the exterior of the endoscope. The endoscope cap is disposed on the distal portion of the endoscope. The first ramp may be integral with the endoscope cap, or alternatively, may be pivotally attached thereto and may pivot from a ramp first configuration to a ramp second configuration. The advancing system may include a connecting member having a first attachment element and a second attachment element. The advancing system may include an elevator apparatus pivotally attached to the distal portion of the endoscope. Preferably, the elevator apparatus can pivot from an elevator first configuration to an elevator second configuration. The elevator apparatus may include first, second, and third transverse passageways disposed through the elevator apparatus. An elevator turning support may be attached to the distal portion of the endoscope and may be partially disposed through the first transverse passageway. The elevator apparatus may include an elevator wire disposed through the second transverse passageway, and the wire may be operatively connected at the proximal portion of the endoscope. The advancing system may include a fourth transverse passageway disposed through the first ramp, wherein the first attachment element is disposed in the third transverse passageway and wherein the second attachment element is disposed in the fourth transverse passageway. The advancing system may further include a second ramp disposed proximal to the first ramp and may be configured to direct a device toward the first ramp.

[0011] In another aspect, a method is provided for delivering a medical device to an internal site of treatment in a patient. The method uses an endoscope cap including a body comprising a proximal end and a distal end, a first aperture disposed at the proximal end and configured to receive a distal portion of an endoscope. The endoscope cap also includes a first ramp disposed between the proximal end and the distal end. The method includes advancing a device to a distal portion of the endoscope, advancing the device onto the first ramp, and advancing the device off of the first ramp toward a selected target anatomy.

[0012] Other systems, methods, features and advantages will be apparent to one with skill in the art upon examination of the following figures and detailed description. It is intended that all such additional systems, methods, features and advantages be included within this description, be within the scope of the invention, and be protected by the following claims.

BRIEF DESCRIPTION OF THE DRAWINGS

[0013] The system may be better understood with reference to the following drawings and description. The components in the figures are not necessarily to scale, emphasis instead being placed upon illustrating the principles of the invention. Moreover, in the figures, like referenced numerals designate corresponding parts throughout the different views.

[0014] FIGS. **1A-1D** depict endoscope cap **100** with a stationary ramp **105**.

[0015] FIGS. **2A-2C** depict endoscope cap **100** with a pivotally attached ramp **220**.

[0016] FIG. **2D** depicts connecting member **240**.

[0017] FIG. **3** depicts medical device **320**.

[0018] FIG. **4** depicts cap **100** and a tether system.

[0019] FIGS. **5A-5C** depict guiding device **400**.

[0020] FIG. **5D** depicts loading of guiding device **400** onto a tether and a wire guide.

[0021] FIG. **5E** depicts endoscope cap **100** and guiding device **400**.

[0022] FIG. **6** depicts endoscope cap **100** and sheath **500**.

[0023] FIG. **7** depicts endoscope cap **100** and sheath **500**.

[0024] FIG. **8** depicts endoscope cap **100** including coupling member **140**.

[0025] FIGS. **9A-9F** depict delivery of a large plastic biliary stent into the common bile duct using endoscope cap **100**.

DEFINITIONS

[0026] Unless otherwise defined, all technical and scientific terms used herein have the same meaning as commonly understood by one of ordinary skill in the art to which this invention pertains. In case of conflict, the present document, including definitions, will control. Preferred methods and materials are described below, although methods and materials similar or equivalent to those described herein can be used in the practice or testing of the present invention. The materials, methods, and examples disclosed herein are illustrative only and not intended to be limiting.

[0027] The terms "comprise(s)," "include(s)," "having," "has," "can," "contain(s)," and variants thereof, as used herein, are intended to be open-ended transitional phrases, terms, or words that do not preclude the possibility of additional acts or structures. The present invention also contemplates other embodiments "comprising," "consisting of" and "consisting essentially of," the embodiments or elements presented herein, whether explicitly set forth or not.

[0028] The term "biocompatible," as used herein, refers to a material that is substantially non-toxic in the in vivo environment of its intended use, and that is not substantially rejected by the patient's physiological system. A biocompatible structure or material, when introduced into a majority of patients, will not cause an undesirably adverse, long-lived or escalating biological reaction or response. Such a response is distinguished from a mild, transient inflammation which typically accompanies surgery or implantation of foreign objects into a living organism.

[0029] The term "distal," as used herein, refers to a direction that is generally towards a target site within a patient's anatomy during a medical procedure.

[0030] The term "proximal," as used herein, refers to a direction that is generally towards a physician during a medical procedure.

[0031] The term "stricture," as used herein, refers to any narrowing of a bodily lumen in relation to an adjacent lumen portion.

DETAILED DESCRIPTION

[0032] FIGS. **1A-1B** depict an endoscope cap **100**. The cap includes a body **102** having a proximal end **104** and a distal end **106**. The proximal end **104** includes an aperture **103** configured to receive a distal portion of an endoscope. Cap **100** further includes a ramp **105** that can be used to deflect medical devices toward a selected target anatomy. Cap **100** further includes a side aperture **107** configured to accommodate the endoscope's visualization devices (e.g., camera, CCD, or fiber-optic element) and working channel(s).

[0033] Body **102** may be constructed of rigid material(s). In some embodiments, all or a portion of the body may be generally transparent. For example, the body may be constructed of a clear polycarbonate polymer. Alternatively, it may be constructed of another clear, translucent, or opaque polymer such as polyurethane, acrylic, or nylon. Body **102** preferably is dimensioned such that its outer diameter is about the same as the outer diameter of the endoscope on which cap **100** is to be used. For example, body **102** may have an outer

diameter of about 8.5 mm to about 12 mm for use with endoscopes having those outer diameters. The skilled artisan will appreciate that body **102** may be dimensioned appropriately for use with endoscopes having greater or lesser diameters, and it may also have a cross-section configured for use with a similarly-shaped endoscope.

[0034] In some embodiments, the cap may include an engagement portion **110** configured to secure the cap to the endoscope. The engagement portion may be integral with or attached to proximal end **104** of the cap. The engagement portion, which preferably extends proximally from body **102** may be constructed from a flexible material that provides a frictional inner diameter surface. For example, the engagement portion may be constructed of a clear polyurethane that is molded to body **102**. In other embodiments, it may be constructed from, for example, silicone or another soft polymer that will provide an ability to mount and frictionally (but removably) attach cap **100** to the endoscope.

[0035] Optionally, cap **100** may include a roller attached to body **102** to facilitate advancement of the tether and other devices thereover. For example, FIGS. **1C-1D** depict ramp **105** having a roller **180** recessed within the ramp surface near the top of the ramp. The roller may be supported by pins or the like; the pins may be attached to or partially embedded in the material of the cap. Alternatively, the ramp can be fabricated such that the roller can be snapped into position within the recess. The roller may contribute to a reduction in friction as the tether and other devices are advanced over the ramp. The roller may be fabricated to any appropriate dimensions for the intended use. For example, the roller may have a length about three-fourths that of the width of the ramp, such as depicted in FIGS. **1C-1D**.

[0036] The cap may include any suitable structure or materials configured to attach the cap to the endoscope. For example, the cap may include an adhesive, magnets, a threaded surface, a detent structure, or other structures and materials known in the art. In another alternative embodiment, the endoscope may include a structure near its distal end for engaging the cap, such as for example, complementary threaded surfaces, interlocking tabs/slots, or another structure configured to attach the cap to the endoscope. Illustrative examples of such engagement portions can be found in U.S. Patent Application Publication No. 2009/0105539, the disclosure of which is herein incorporated by reference in its entirety.

[0037] FIGS. **2A-2C** show another embodiment of cap **100** including a ramp **220** pivotally attached to body **102**. The ramp includes transverse passageways **222** and **224**. Optionally, each respective passageway may include metal sleeves **223** and **225**. Ramp **220** is pivotally attached to the cap by a ramp turning support **226**, part of which is partially

disposed through transverse passageway **224**. The cap may further include a stationary ramp **228** configured to provide smooth transition from the external surface of the endoscope to ramp **220**.

[0038] FIGS. **2B-2C** depict the cap of FIG. **2A** disposed on the distal end of an endoscope **302**. The endoscope includes an elevator **230** that may be detachedly connected to ramp **220** by a connecting member **240**. Elevator **230** includes transverse passageways **232**, **234**, and **236**. Optionally, each respective passageway may include metal sleeves **233**, **235** and **237**. The elevator is pivotally attached to the endoscope by an elevator turning support **238**, part of which is partially disposed through transverse passageway **234**. An elevator wire **239** is connected at one end to elevator **230**, and operatively connected at the other end to a control system located at the proximal portion of endoscope **302**. Manipulation of the control system moves the elevator wire relative to the endoscope. As the elevator wire is retracted toward the proximal portion of the endoscope, elevator **230** moves about the elevator turning support **238**. The elevator may be used to deflect devices delivered through the endoscope. For example, the elevator may be used to deflect a wire guide into the biliary system of a patient. A more detailed description of a similar endoscopic elevator apparatus can be found in U.S. Patent Application Publication No. 2007/0208219, the disclosure of which is herein incorporated by reference in its entirety.

[0039] The connecting member **240** includes an elongate portion **242** and two attachment elements **244**, each attachment element disposed at an end of the elongate portion (FIG. **2D**). The connecting member may be attached to elevator **230** and ramp **220** by inserting the attachment elements into transverse passageways **222** and **232**. Attachment elements **244** may be cylindrically shaped structures attached to or integral with elongate portion **242**. Preferably, the attachment elements can engage in axial motion about their respective central axes. For example, the attachment elements may include an outer portion and an inner portion separated by bearings that allow the outer portion to rotate about the attachment element central axis. The attachment elements may include any suitable structural elements necessary to engage the elevator **230** and ramp **220**. For example, attachment elements **244** and transverse passageways **222** and **232** may have complimentary threaded surfaces.

[0040] When elevator **230** and ramp **220** are attached by connecting member **240**, actuation of elevator **230** causes actuation of ramp **220**. FIG. **2B** shows elevator **230** and ramp **220** in a first configuration wherein elevator wire **239** is not retracted toward the proximal portion of the endoscope. FIG. **2C** shows elevator **230** and ramp **220** in a second configuration wherein the elevator wire is retracted toward the proximal portion of the

endoscope. As a medical device is advanced down alongside the endoscope, ramp **220** may be actuated from the first configuration to the second configuration to deflect the device toward the selected target anatomy. The skilled artisan will appreciate that in some cases, ramp **220** need not be fully actuated from the first configuration to the second configuration, but rather may be actuated to a configuration as needed for the particular procedure.

[0041] The presently disclosed ramps may be comprised of any suitable biocompatible material(s). In some embodiments, the ramps may be comprised of the same material as body **102**. In other embodiments, the ramps may be comprised of a different material from body **102** or a combination thereof. Preferably, the ramps are comprised of a polymeric material. Properties of the ramp, such as flexibility/rigidity, may be adjusted by selection of an appropriate polymer as is known in the art. For example, polymers with a low coefficient of friction may be particularly suitable for various embodiments, while polymers with a high coefficient of friction may be suitable in other embodiments, such as for ramps configured to grasp a delivered device. Suitable polymeric materials include, but are not limited to, polytetrafluorethylene, polyethylene, ultra-high molecular weight polyethylene, polypropylene, perfluoroelastomer, fluoroelastomer, nitrile, neoprene, polyurethane, silicone, styrene-butadiene, rubber, polycarbonate, acrylic, nylon, or combinations thereof.

[0042] The ramps may be configured to a variety of angles of elevation relative to the body **102**. In general, however, the ramps present an angle of elevation ranging from about 1 degree to about 90 degrees relative to body **102**, preferably about 5 degrees to about 75 degrees, more preferably about 10 degrees to about 60 degrees, and most preferably about 20 degrees to about 45 degrees. The ramp incline surface may be a uniform planar surface, or alternatively, may be a curvilinear surface. Preferably, the ramp surface is atraumatically shaped. For example, ramp **220** as shown in FIG. **2A** presents an atraumatic profile with rounded edges along the ramp surfaces.

[0043] In some embodiments, the ramps may comprise surface structures configured to receive a delivered device. For example, ramps **105** and **220** may comprise a grasping slot configured to grasp another device. The grasping slot may take on any suitable shape or form for grasping the device. Suitable grasping configurations are disclosed in U.S. Patent Application Publication No. 2007/0208219, and may be applied to the presently disclosed ramps.

[0044] FIG. **3** depicts a device **320** that may be delivered to a selected target anatomy. Device **320** is intended to be a generic representation of any device that may be deflected by the presently disclosed endoscope cap. Device **320** may be a device adapted to provide

therapy or diagnosis to the selected target anatomy, or alternatively, a device configured to deliver another therapeutic or diagnostic device to the selected target anatomy. Device **320** may be, for example, a nasoenteric tube, a J portion of a PEG-J tube, a colon decompression tube, a biliary stent, a delivery catheter, an overtube, an introducer sheath, or another device. Device **320** includes a proximal end **324** and a distal end **326**. In some embodiments, as will be explained in greater detail below, device **320** may have a coupling element **322** complimentary to and configured to couple with another coupling element. In other embodiments, coupling element **322** may be absent from device **320**.

[0045] FIG. **4** shows cap **100** disposed on the distal end of endoscope **302** wherein the endoscope includes a tether system. The tether system may be used to pull devices down alongside the endoscope from a proximal portion **306** to a distal portion **308**. Endoscope **302** has a working channel **310** extending from the proximal portion to the distal portion. The working channel connects to an aperture **312** disposed at the distal portion. Aperture **312** is aligned with aperture **107** of cap **100**. Tether **304** extends externally alongside the endoscope from the proximal portion **306** to the distal portion **308** and enters working channel **310** via apertures **107** and **312**. The tether extends back through the working channel to proximal portion **306** and exits at port **314**. The tether includes a first end **305** and a second end **307**. The tether may include a coupling element **316**, preferably located at second end **307**. The coupling element may be attached to or integrally formed with tether **304**. The coupling element may be attached to the tether by glue, adhesive, or suture, for example. Once endoscope **302** has reached a selected target anatomy and device **320** has been coupled to the tether, the device may be advanced to the distal portion of the endoscope by pulling the tether back through working channel **310** from port **314**. Preferably, device **320** can be pushed from its proximal end **324** while the tether is used to pull from its distal end **326**.

[0046] Tether **304** may be a strap, a wire, a suture, a thread, or any other device capable of functioning as a tether suitable for the intended use. Preferably, the tether is configured to bend without kinking. In cases where additional instruments will be introduced through the endoscope working channel or where the working channel will be used to provide aspiration or decompression, preferably the tether occupies minimal space therein and does not substantially interfere with the procedure. In one embodiment, the tether may be a wire having a 0.035 millimeter diameter, and can be used with an endoscope having a lumen diameter of 4.8 millimeters, for example. In another embodiment, the tether may be a flexible strap, such as a nylon strap, configured to conform to an inner surface of the endoscope working channel. The tether may be fabricated from a variety of biocompatible

materials, including metal alloys and polymeric materials. Suitable polymeric materials include, for example, nylon, polyester, polyethylene, ultra-high molecular weight polyethylene, or polypropylene. Suitable metal alloys include, for example, nickel-titanium alloys. The tether can be coated with one or more materials. Preferably, at least a portion of the tether is coated with a hydrophilic or other lubricious material that can facilitate advancement of the tether through the anatomy of the patient. The tether may be coated with, for example, SLIP-COAT® Biopolymer, STS Biopolymers, Inc., Henrietta N.Y.

[0047] The coupling elements **316** and **322** may include any suitable structures configured to temporarily couple two medical devices. For example, the coupling elements may include a closed loop structure as depicted in FIGS. **3** and **4**. The coupling elements may include releasable or breakable sutures, temporary or dissolvable bonds or adhesives, magnets, or a combination thereof. The coupling elements may include a biocompatible ball which is crimped, glued, or otherwise designed to slide off or break apart with the application of sufficient amount of pull force (e.g., 3 pounds), and can thereafter be safely passed through the gastrointestinal system or be absorbed thereby. Optionally, device **320** may be coupled directly to the tether, with for example, breakable or dissolvable sutures.

[0048] The tether system may further include a guiding device used to advance devices beyond the distal portion of the endoscope (FIGS. **5A-5E**). Guiding device **400** includes a flexible or semi-flexible elongate member **402**, a fulcrum **404**, and a variable stiffness cable **406**. The elongate member **402** includes a distal portion **410** and a proximal portion **412**. The elongate member may have a range of lengths and diameters depending on the size of the working channel of the endoscope to be used and the procedure to be performed. In general, the length of elongate member **402** ranges from about 100 cm to about 300 cm. The cross-sectional diameter generally ranges from about 1 mm to about 3 mm, and is preferably configured for advancement through the working channel of the endoscope. The skilled artisan will appreciate that all dimensions provided herein are intended as examples only, and guiding devices having different dimensions may be substituted for a particular use.

[0049] Elongate member **402** includes a biocompatible material that encases variable stiffness cable **406**, shielding it from direct exposure to the patient anatomy. The material may be, for example, expanded polytetrafluoroethylene, polytetrafluoroethylene, polyethylene, or polyurethane. In one exemplary embodiment, elongate member **402** may be fabricated by placing heat shrink tubing, such as heat shrink polytetrafluoroethylene tubing, over the variable stiffness cable **406** and thereafter heat shrinking the tubing in place. The elongate shaft may comprise one or more materials providing the shaft with properties of

sufficient strength, flexibility, and resistance to compression in order to traverse tortuous areas of the anatomy. Such materials include nylon, polyether block amides, polyethylene terephthalate, polytetrafluoroethylene, polyetheretherketone, or combinations thereof. The skilled artisan will appreciate, however, that the elongate member may be constructed from other biocompatible materials as is known in the art to provide the desired properties.

[0050] Fulcrum **404** is attached to or integrally formed with distal portion **410** of elongate member **402**. The fulcrum may be any suitable structure configured to receive tether **304** and provide a point at which the tether can be advanced through or around. Fulcrum **404** may be, for example, a single loop structure (FIG. **5A**), a double loop structure (FIG. **5B**), or a cylindrical structure having a lumen **405** extending therethrough (FIG. **5C**). The fulcrum has a diameter ***d*** preferably ranging from about 1 mm to about 3 mm. In some embodiments, the fulcrum may be constructed of wire, suture, or thread. In other embodiments, the fulcrum may be constructed of a more rigid material. In general, however, fulcrum **404** may comprise any material suitable for the intended use. The fulcrum may include, for example, polymeric materials such as nylon, and/or metallic materials such as nickel-titanium alloys.

[0051] Portions of the guiding device can be coated with one or more materials. Preferably, at least a portion of elongate member **402** is coated with a hydrophilic or other lubricious material. Hydrophilic or other lubricious coatings are known to facilitate advancement of devices through patient anatomy or introducer devices. In some embodiments, fulcrum **404** may be comprised of and/or coated with a material that facilitates smooth advancement of the tether therethrough. Preferred materials include polytetrafluoroethylene, ultra-high molecular weight polyethylene (UHMWPE), nylon, and polyoxymethylene.

[0052] Variable stiffness cable **406** is disposed through elongate member **402** and includes a helical spring **442** extending from proximal portion **412** to distal portion **410** near fulcrum **404**. The spring includes a small pitch between the adjacent turns. A wire **444**, such as a stainless steel wire, extends through the central bore of spring **442** and is affixed to the distal end thereof. Alternatively, the wire and the spring may both be affixed to a distal tip. Wire **444** is operatively connected to a hand assembly **413** located proximal to proximal portion **412**. Hand assembly **413** includes an actuator **414** that can be used to compress or decompress spring **442**. For example, in some embodiments, retraction of the actuator in the proximal direction retracts wire **444**. This retraction of the wire reduces the distance between the turns in spring **442**, and thereby reduces the spring's flexibility. Additional examples of

variable stiffness cables are disclosed in U.S. Patent Nos. 4,215,703 and 3,854,473, the disclosures of which are herein incorporated by reference in their entirety.

[0053] Guiding device **400** may be loaded onto tether **304** at the proximal portion of the endoscope by passing first end **305** of tether **304** through fulcrum **404**. Preferably, the guiding device is also loaded onto the proximal end of a wire guide **450** that exits port **314** and has been used to cannulate the target anatomy. The tether and the wire guide may be passed, for example, through the double loop fulcrum **404**, as depicted in FIG. **5D**. The elongate member **402** can then be advanced into the working channel **310** via port **314**. Thereafter, the elongate member may be advanced through the working channel, out apertures **107** and **312**, and to a selected target anatomy beyond distal portion **308**. In some embodiments, an endoscopic elevator apparatus, such as elevator **230**, may be used to aid in advancement of elongate member **402** into the selected target area. As the elongate member advances beyond the distal portion of the endoscope, preferably the tether becomes looped around the fulcrum and is pulled into the target anatomy.

[0054] Once distal portion **410** of elongate member **402** reaches a target anatomy **480**, the variable stiffness cable **406** may be used to stiffen and anchor the elongate member in place (FIG. **5E**). The tether can then be pulled back through working channel **310** from port **314**, thereby advancing a coupled device **320** toward distal portion **308** of the endoscope. Upon reaching the distal portion of the endoscope, device **320** may advanced onto ramp **105**. With continuous pulling via the tether, and optional pushing from the proximal end, device **320** may be deflected by ramp **105** and continue to advance along the guiding device toward the target anatomy.

[0055] During introduction of the endoscope and extension of the guiding device into the target anatomy, the tether can be held secure as needed. Preferably, the tether is long enough so that control can be maintained at both ends while the endoscope and guiding device are advanced to the target anatomy. In other words, preferably the tether is greater than two times the length of the endoscope. In embodiments using the guiding device, preferably the tether is greater than two times the additive length of the endoscope and the length of the portion of elongate member **402** that extends out of aperture **312** and to the target anatomy. The portion of tether exiting port **314** can be held secure at the port by, for example, a locking device (e.g., Fusion® Wire Guide Locking Device, Cook Endoscopy Inc., Winston-Salem, N.C.), or by holding the tether. Likewise, the other end of the tether, specifically the portion of tether running external along the endoscope to the proximal portion **306**, can be held secure by a locking mechanism or similar device, or by holding the tether. As elongate

member **402** or device **320** is advanced into the target anatomy, the tether can be unlocked as needed.

[0056] FIG. **6** shows cap **100** disposed on the distal end of an endoscope wherein the endoscope includes a sheath **500**. Sheath **500** includes a proximal portion **502** and a distal portion **504**. The sheath includes a first lumen **510** for an endoscope and a second lumen **520** for devices delivered alongside the endoscope. Lumen **520** extends from the proximal portion **502** to the distal portion **504** and has distally located aperture **522**, and proximally located aperture **524**. Device **320** may be advanced down lumen **520** and thereafter deflected toward a selected target anatomy. In one embodiment, the device may be pushed down the sheath lumen, optionally with the aid of a pushing catheter or other similar device. FIG. **7** shows a grasping device **320** that has been pushed down lumen **520** and thereafter deflected by ramp **105**. In other embodiments, the device may advanced down lumen **520** with the tether system as described, wherein a portion of the tether is disposed through the length of lumen **520** to begin the procedure. In other embodiments, the device may be advanced down lumen **520** by pushing from the device proximal end **324** while pulling at the device distal end **326**. As depicted, endoscope **302** is disposed through lumen **510**, the sheath extending over the endoscope proximal portion **306** to distal portion **308**. The sheath may have a range of widths and lengths depending on the size of the endoscope to be used. In general, the sheath length ranges from about 100 cm to about 200 cm; and the sheath has a wall thickness of between about 0.1 mm to about 8 mm. In one embodiment, the sheath may be constructed from expanded polytetrafluoroethylene (ePTFE). The sheath and the cap may be integrally attached at the distal end of the sheath and at the proximal end **104** of the cap. Alternatively, the cap may be configured to fit over the distal end of the sheath. For example, the cap can include, as described above, structures configured to frictionally engage the exterior of the endoscope and/or the exterior surface of the sheath.

[0057] FIG. **8** depicts cap **100** including a coupling member **140** configured to engage lumen **520** at aperture **522** of sheath **500**. Coupling member **140** includes a proximal portion **142** and a distal portion **144**. The coupling member further includes a lumen **146** that extends through the proximal portion **142** to the distal portion **144** and is open at both ends. Lumen **146** is aligned with ramp **105** such that once device **320** exits the sheath lumen and lumen **146**, the device will intersect ramp **105** and be deflected thereby. The proximal portion **142** is configured to slide into sheath lumen **520** at aperture **522** and frictionally engage the inner surface of lumen **520**, thereby securing the coupling member to the lumen.

[0058] FIGS. **9A-9F** demonstrate a method by which a medical device can be introduced alongside the endoscope to a selected target anatomy. In one exemplary embodiment, the endoscope cap can be used with Endoscopic Retrograde Cholangiopancreatography (ERCP). ERCP involves inserting a duodenoscope into a patient's mouth and through the esophagus, stomach, and duodenum until it reaches the area where the ducts of the biliary tree and the pancreas open into the duodenum. Devices delivered through the endoscope's working channel may then traverse the Papilla of Vater for access to the ductal system. Therein, these devices can be used to perform diagnostic and therapeutic procedures. Examples of such devices include wire guides, baskets, snares, stents, extraction balloons, introducer brushes, catheters, and baby endoscopes usually of 0.8 mm to 4 mm in diameter.

[0059] One ERCP procedure includes delivery of a plastic biliary stent into an area of the bile or pancreatic duct where a stricture is blocking drainage of fluid. The blockage may be caused by a tumor in the bile or pancreatic duct. Typically, by the time symptoms appear in the patient, the tumor is at an advanced stage and is deemed inoperable. As a result, management of the cancer usually focuses on palliation of the symptoms. As an alternative to surgical bypass procedures for palliation, a stent may be delivered by ERCP and positioned through the obstructed area so as to maintain a pathway for fluid to flow across. However, the maximum diameter of a plastic biliary stent generally depends on the diameter of the endoscope's working channel. As a result, in some instances multiple stents must be placed within the stricture to allow for sufficient drainage. Using the presently disclosed endoscope cap, plastic biliary stents having diameters larger than the endoscope's working channel can be delivered to the bile or pancreatic ducts. These larger tubes may facilitate more efficient drainage of the duct and may be less prone to clogging compared to their smaller counterparts.

[0060] FIGS. **9A-9F** illustrate delivery of a large plastic biliary stent **610** into the common bile duct using cap **100** including ramp **105**. The tether **304**, guiding device **400**, and sheath **500** are also used to deliver the stent. The procedure begins with the tether disposed through lumen **520** and back through lumen **310**, as depicted in FIG. **9A**. The endoscope may then be advanced into the patient and positioned in the duodenum **602** to allow viewing of the Sphincter of Oddi and the Papilla of Vater **604**, which lie at the opening to the common bile duct **606** and the pancreatic duct. Next, the wire guide **450** may be extended out of apertures **107** and **312**, through the Ampulla of Vater and into the ductal system (FIG. **9B**). Preferably, the wire guide is advanced past the stricture **608**. A dilator catheter may be used as needed to facilitate cannulation of the duct. A more detailed

description of cannulation of the common bile duct with the assistance of a dilator catheter is disclosed in U.S. Patent Application Publication No. 2005/0059890, the disclosure of which is herein incorporated by reference in its entirety. The guiding device **400** can be loaded over the wire guide and the tether **304** at the proximal portion of the endoscope. Elongate member **402** of the guiding device may be advanced through the endoscope's working channel and thereafter extended out of apertures **107** and **312** and into the ductal system, all the while advancing over the wire guide via fulcrum **404** (FIG. **9C**). The endoscope may include an elevator apparatus, as described above, that may be used to deflect the guiding device toward the ductal system. As elongate member **402** advances into the ductal system, the tether will also be advanced by virtue of its contact with fulcrum **404**. Preferably, fulcrum **404** is advanced past stricture **608** so that the biliary stent can be pulled into place when advanced into the target anatomy. Once elongate member **402** is advanced to the desired location, variable stiffness cable **406** may be engaged by manipulation of actuator **414**, thereby causing stiffening of the elongate member **402**. Stiffening anchors the elongate member in position and provides rigidity which can prevent buckling during delivery of device **320**.

[0061] Next, the biliary stent may be coupled to the tether at the proximal portion of the endoscope. Preferably, the stent is loaded into and delivered via a delivery catheter that is configured to couple to the tether. The delivery catheter, as device **320**, includes a coupling element **322** for coupling to the tether, and preferably includes a stiffening element or a partially rigid portion so that the catheter can be pushed from its proximal end **324**. Pushing the stent or the delivery catheter can reduce tension on the tether during introduction and may reduce the incidence of mucosal trauma. Once coupled, device **320** may be advanced into lumen **520** at aperture **524**. Device **320** may be advanced through lumen **520** and thereafter to the distal portion of the endoscope. Upon exiting lumen **520** at aperture **522**, preferably device **320** is deflected by ramp **105** toward the Papilla of Vater **604** (FIG. **9D**).

[0062] The delivery catheter may be advanced along elongate member **402** of guiding device **400** by continuing to push from the proximal end while pulling with tether **304**. Preferably, the delivery catheter is advanced to distal portion **410**, and thus, the target anatomy (FIG. **9E**). Once the delivery catheter reaches the target site (i.e., the stricture), it may then be decoupled from the tether. For example, the delivery catheter may be held at the proximal end while the tether is pulled back at port **314** with sufficient force to detach coupling element **316** from coupling element **322**, thereby decoupling the delivery catheter from the tether. The tether may then be pulled out of the ductal system and back into the endoscope working channel **310**. The guiding member **400** and subsequently the wire guide

450 may be advanced out of the ductal system and back into the endoscope. Next, the biliary stent **610** may be delivered to the site of the stricture **608** by pushing the stent out of the delivery catheter using an internal pushing catheter (FIG. **9F**). The delivery catheter may then be removed from the patient anatomy. The skilled artisan will appreciate that the steps of accessing, delivering, decoupling, and removal of devices from the target anatomy may be varied as necessary. For example, if additional procedures are to be performed using the wire guide, it may be preferable to only partially retract the wire guide from the bile duct.

[0063] While various embodiments of the invention have been described, it will be apparent to those of ordinary skill in the art that many more embodiments and implementations are possible within the scope of the invention. Accordingly, the invention is not to be restricted except in light of the attached claims and their equivalents.

CLAIMS

1. An endoscope cap comprising:

a body comprising a proximal end and a distal end;

a first aperture disposed at the proximal end and configured to receive a distal portion of an endoscope; and

a first ramp disposed between the proximal end and the distal end and projecting outwardly from the body, wherein the first ramp is configured to deflect an elongate medical device disposed externally to the endoscope in a direction away from the endoscope.

2. The endoscope cap of claim 1 further comprising a second aperture disposed proximal to the distal end and configured to accommodate an aperture of a working channel of the endoscope.

3. The endoscope cap of claim 1 wherein the first ramp is integral with the body.

4. The endoscope cap of claim 1, further comprising an engagement portion proximal to the proximal end and configured to secure the endoscope cap to the endoscope.

5. The endoscope cap of claim 1 wherein the body comprises a polycarbonate, polyurethane, or nylon polymer.

6. The endoscope cap of claim 1 wherein the first ramp is pivotally attached to the body and can pivot from a first configuration to a second configuration.

7. The endoscope cap of claim 1 configured for a duodenoscope.

8. The endoscope cap of claim 1 wherein the ramp comprises polytetrafluorethylene, polyethylene, ultra-high molecular weight polyethylene, polypropylene, perfluoroelastomer, fluoroelastomer, nitirle, neoprene, polyurethane, silicone, styrene-butadiene, rubber, polycarbonate, acrylic, or nylon, or combinations thereof.

9. The endoscope cap of claim 1 wherein the ramp comprises an angle of elevation relative to the body ranging from about 1 degree to about 90 degrees.

10. The endoscope cap of claim 1 wherein the ramp comprises a grasping slot configured to receive a medical device.

11. The endoscope cap of claim 1 comprising a coupling member configured to couple with an endoscope sheath lumen, the endoscope sheath lumen configured for advancing devices from a proximal portion of the endoscope to a distal portion of the endoscope.

12. The endoscope cap of claim 11 wherein the coupling member comprises:

a coupling member proximal portion and a coupling member distal portion; and

a coupling member lumen extending from the coupling member proximal portion to the coupling member distal portion, the coupling member lumen open at both ends,

wherein the coupling member proximal portion comprises an outer surface configured to frictionally engage an inner surface of the endoscope sheath lumen, and wherein the coupling member lumen is aligned with the first ramp.

13. The endoscope cap of claim 6 comprising:

a first transverse passageway and a second transverse passageway disposed through the first ramp; and

a ramp turning support attached to the body and partially disposed through the first transverse passageway.

14. The endoscope cap of claim 6 comprising a second ramp disposed proximal to the first ramp.

15. An advancing system, comprising:

an endoscope having a proximal portion and a distal portion; and

an endoscope cap disposed on the distal portion and comprising a first ramp configured to engage and deflect an elongate device advanced along the exterior of the endoscope.

16. The advancing system of claim 15 wherein the first ramp is integral with the endoscope cap.

17. The advancing system of claim 15 wherein the first ramp is pivotally attached to the endoscope cap.

18. The advancing system of claim 17 further comprising:

a connecting member having a first attachment element and a second attachment element;

an elevator apparatus pivotally attached to the distal portion, the elevator apparatus comprising:

a first transverse passageway, a second transverse passageway, and a third transverse passageway disposed through the elevator apparatus;

an elevator turning support attached to the distal portion and partially disposed through the first transverse passageway; and

an elevator wire disposed through the second transverse passageway and operatively connected at the proximal portion; and

a fourth transverse passageway disposed through the first ramp, wherein the first attachment element is disposed in the third transverse passageway and wherein the second attachment element is disposed in the fourth transverse passageway.

19. The advancing system of claim 18 wherein the endoscope cap comprises a second ramp disposed proximal to the first ramp.

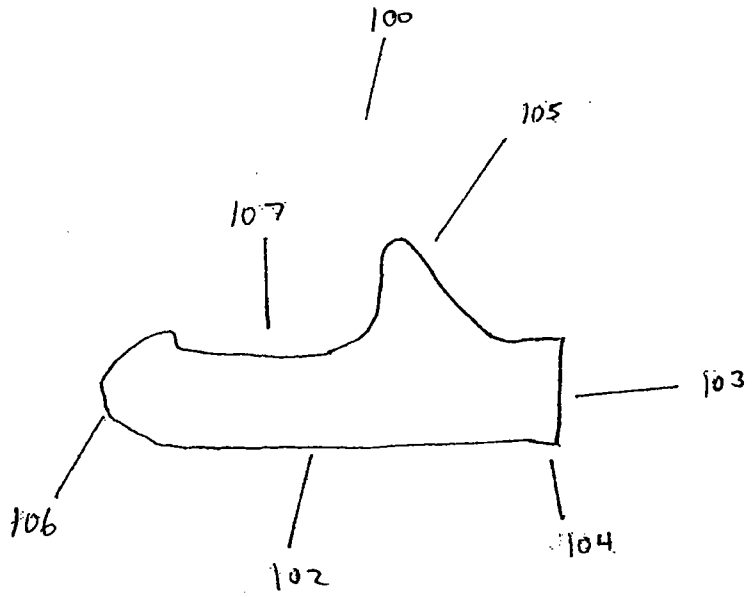

FIG. 1A

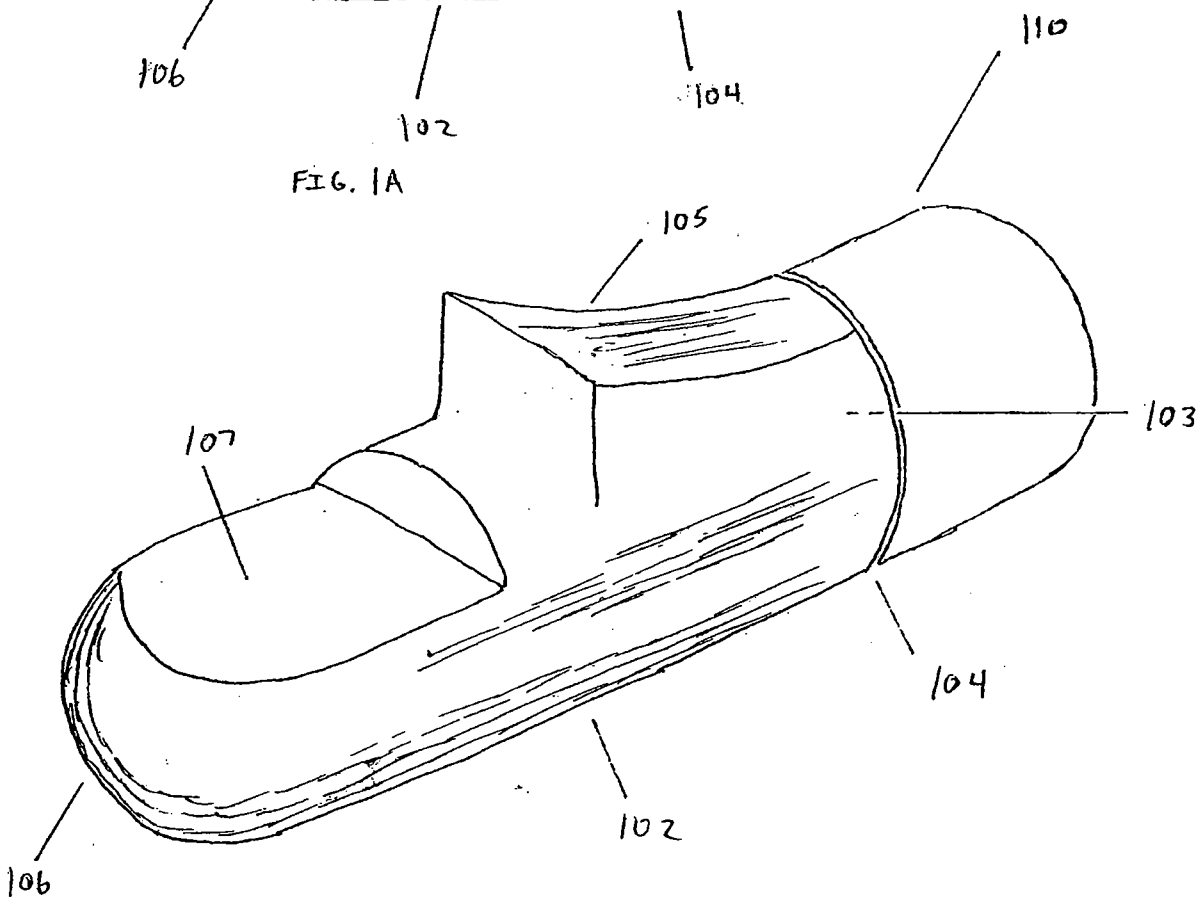

FIG. 1B

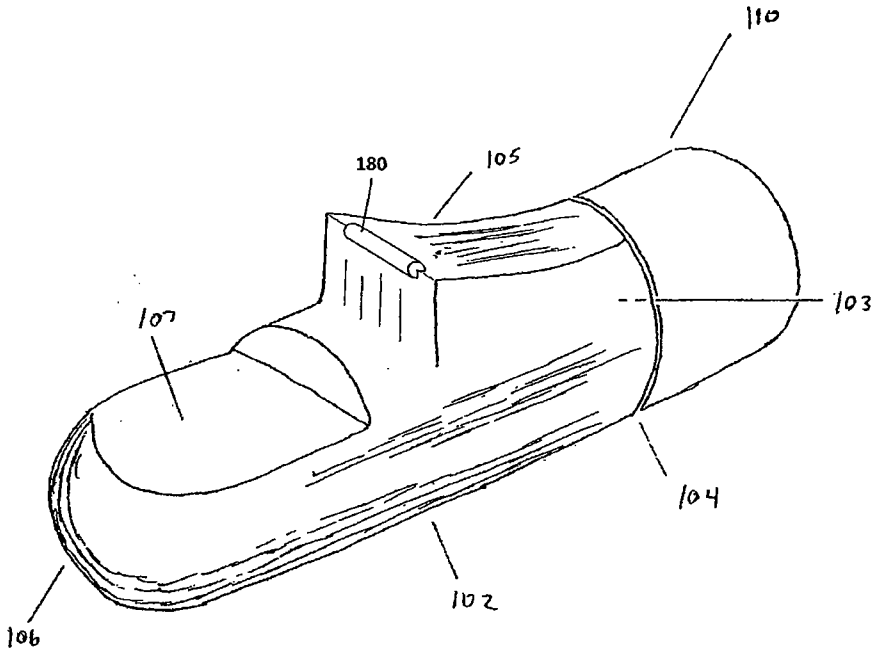

FIG. 1C

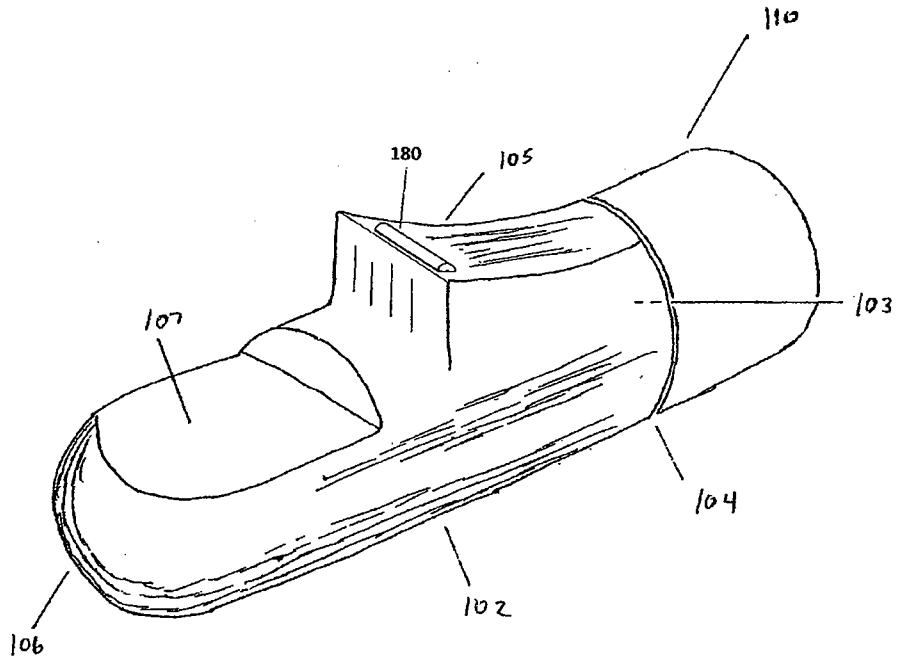

FIG. 1D

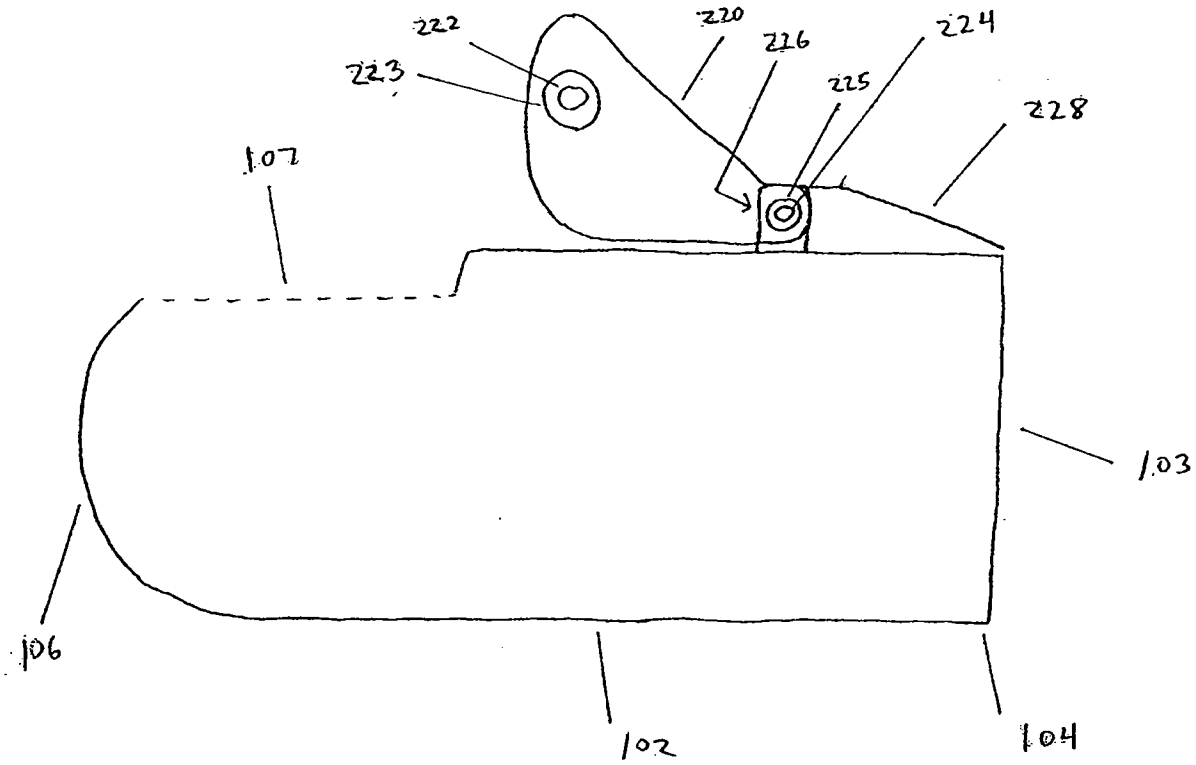
222
220
223
226
224
225
228
107
103
106
102
104

FIG. 2A

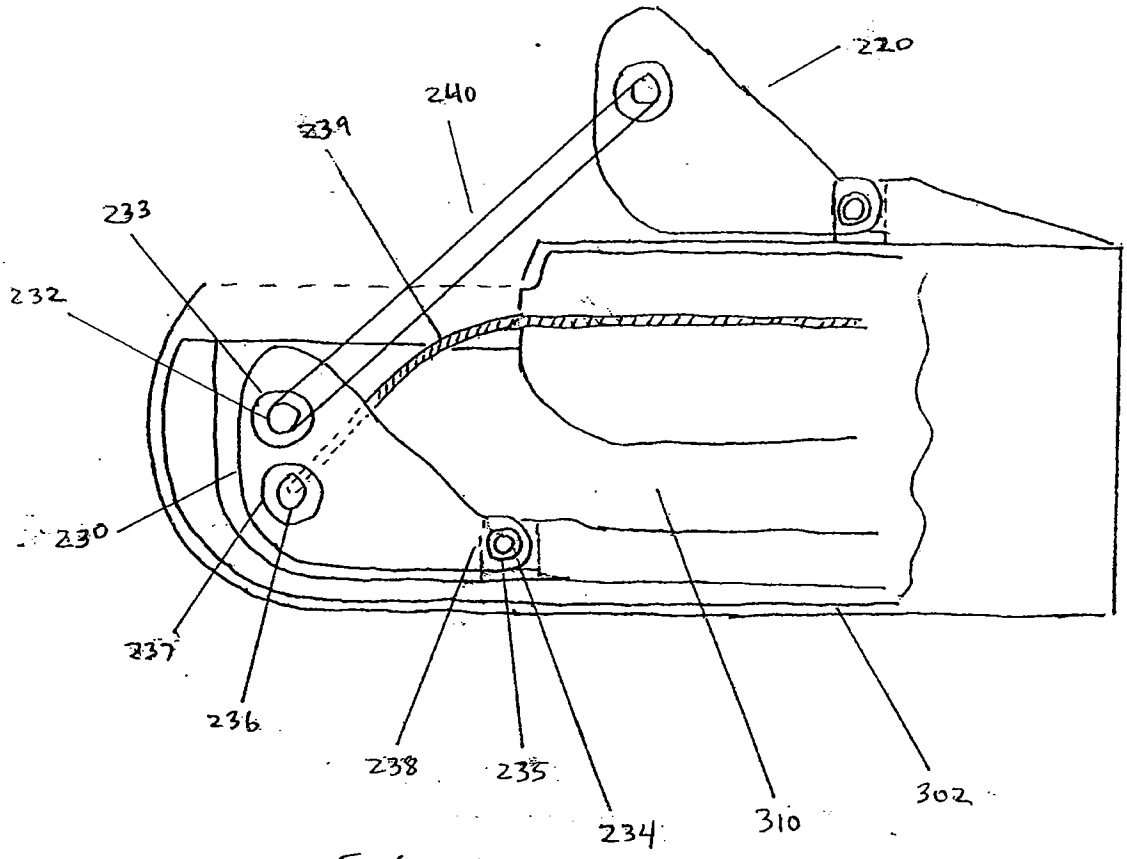
220
240
239
233
232
230
237
236
238
235
234
310
302

FIG. 2B

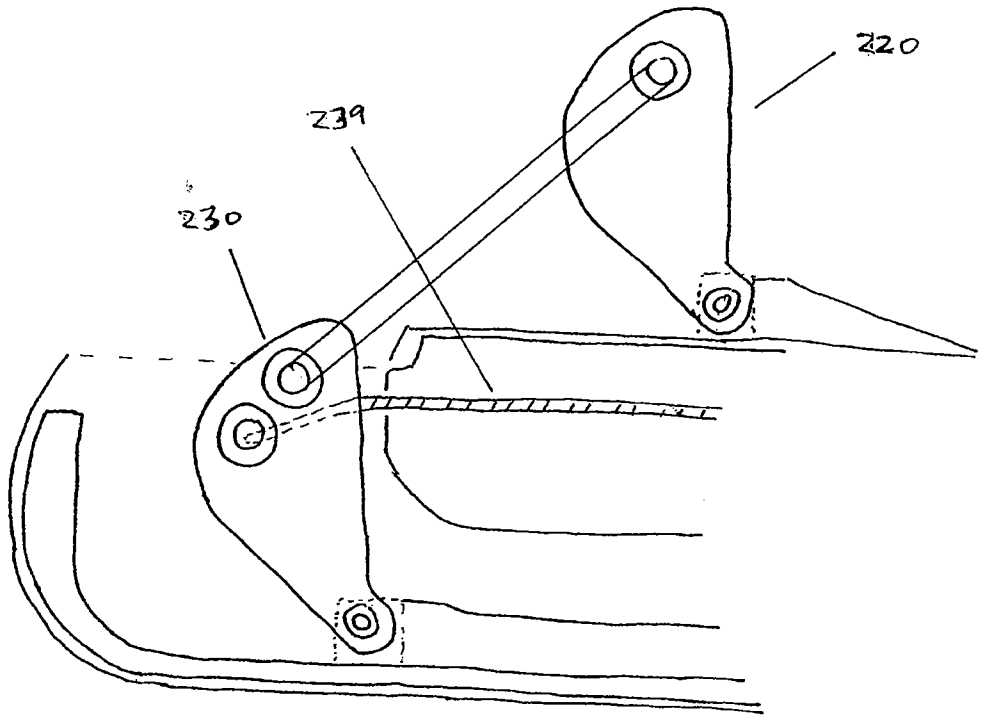

FIG. 2C

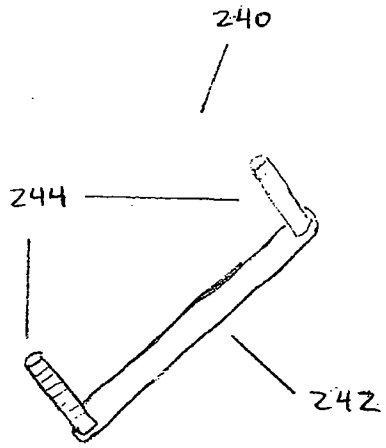

FIG. 2D

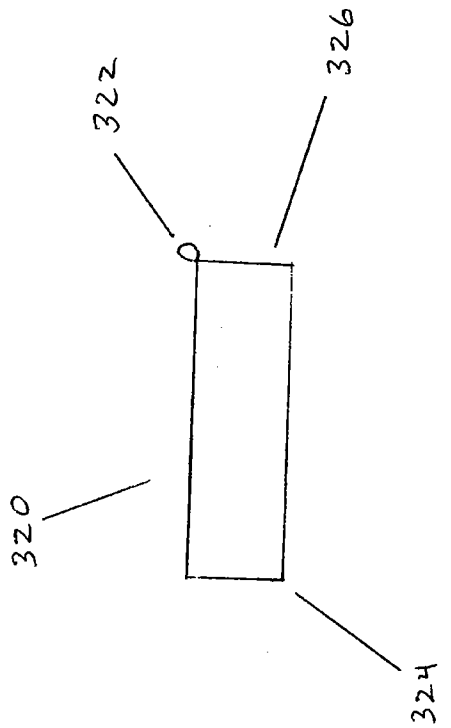

FIG. 3

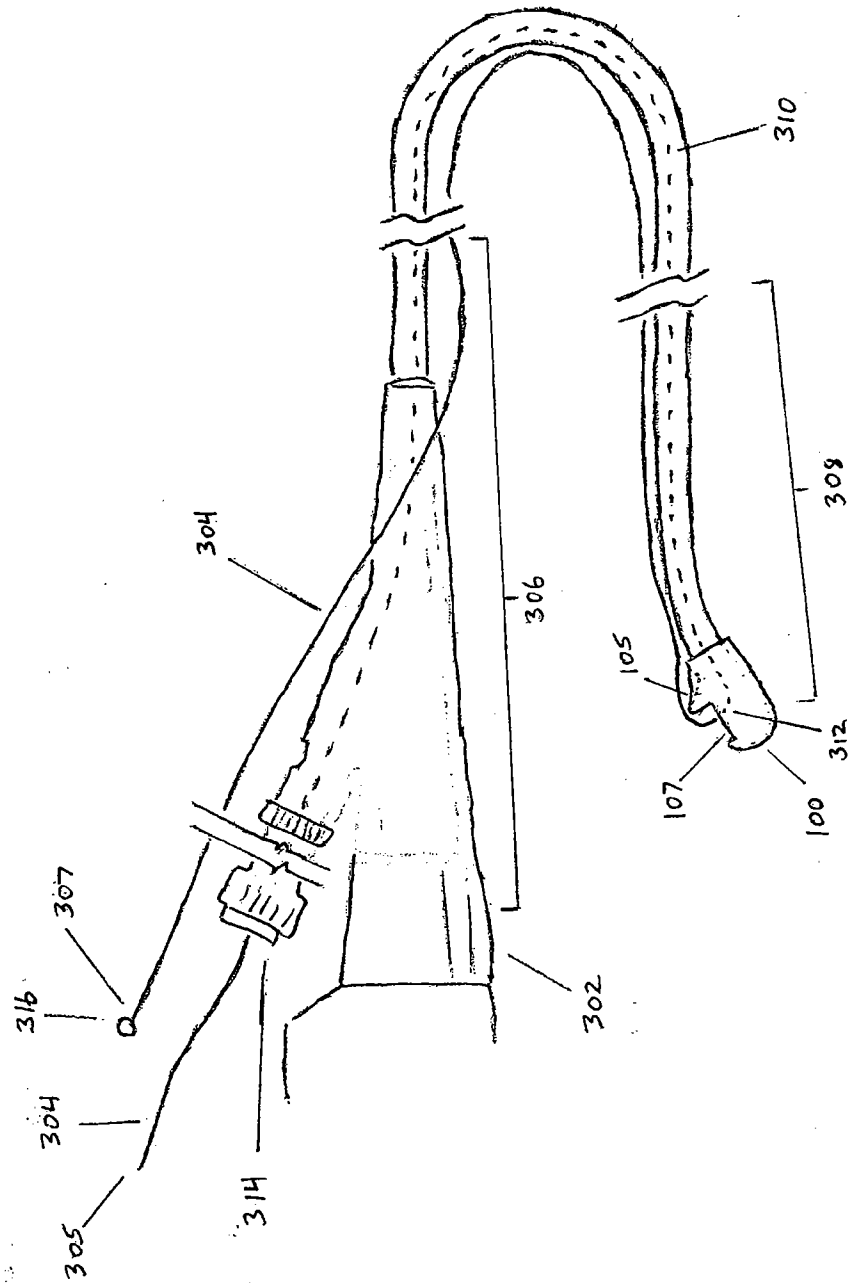

FIG. 4

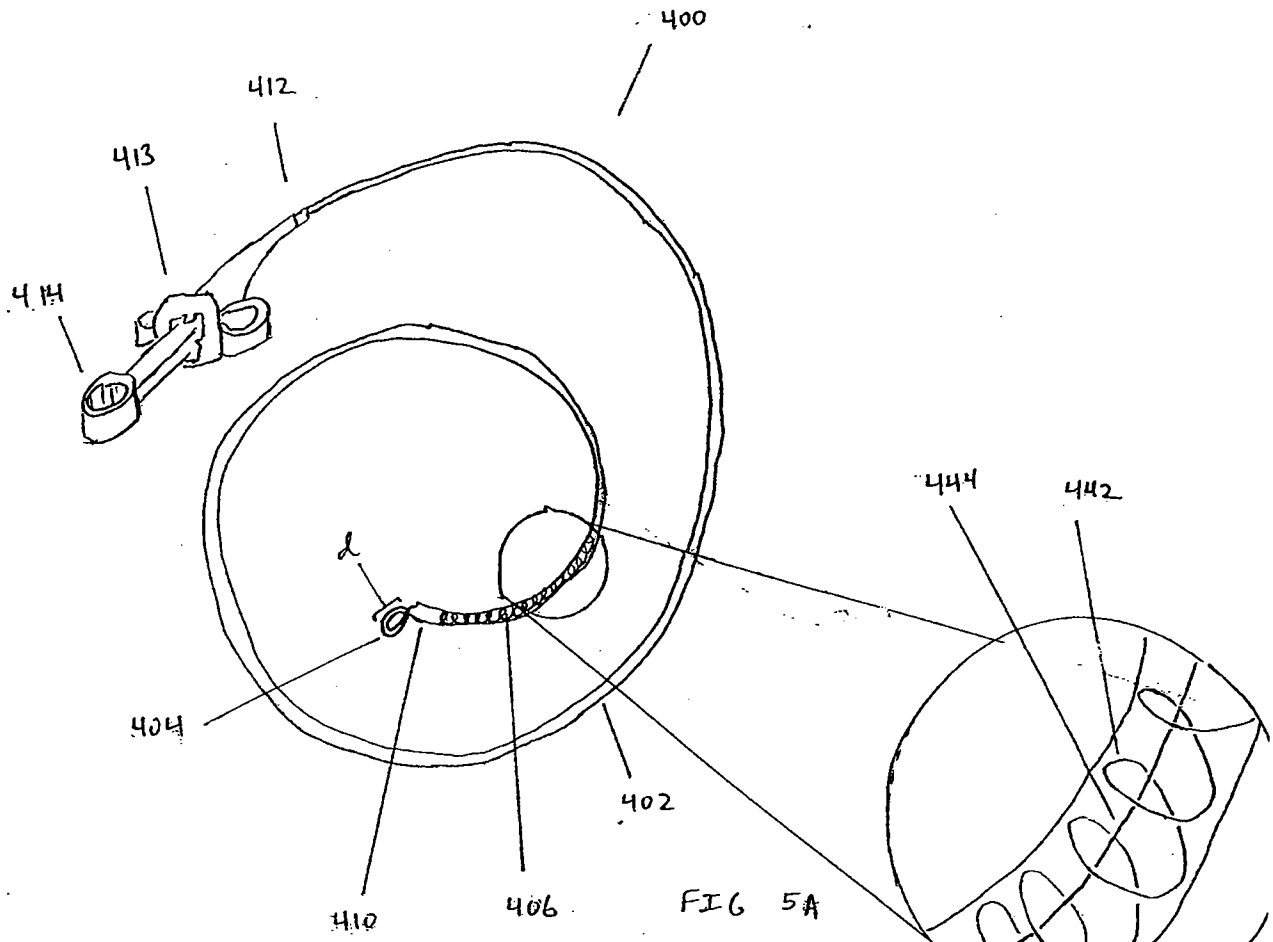

FIG 5A

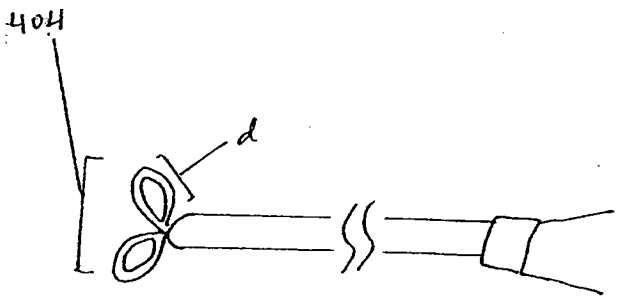

FIG. 5B

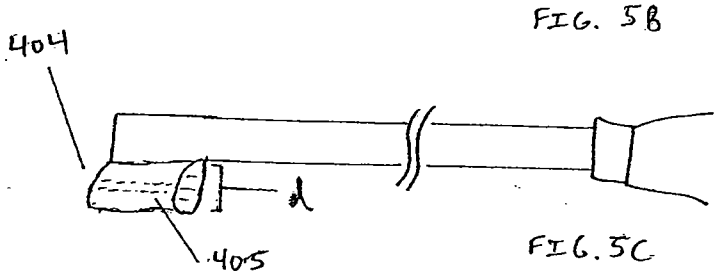

FIG. 5C

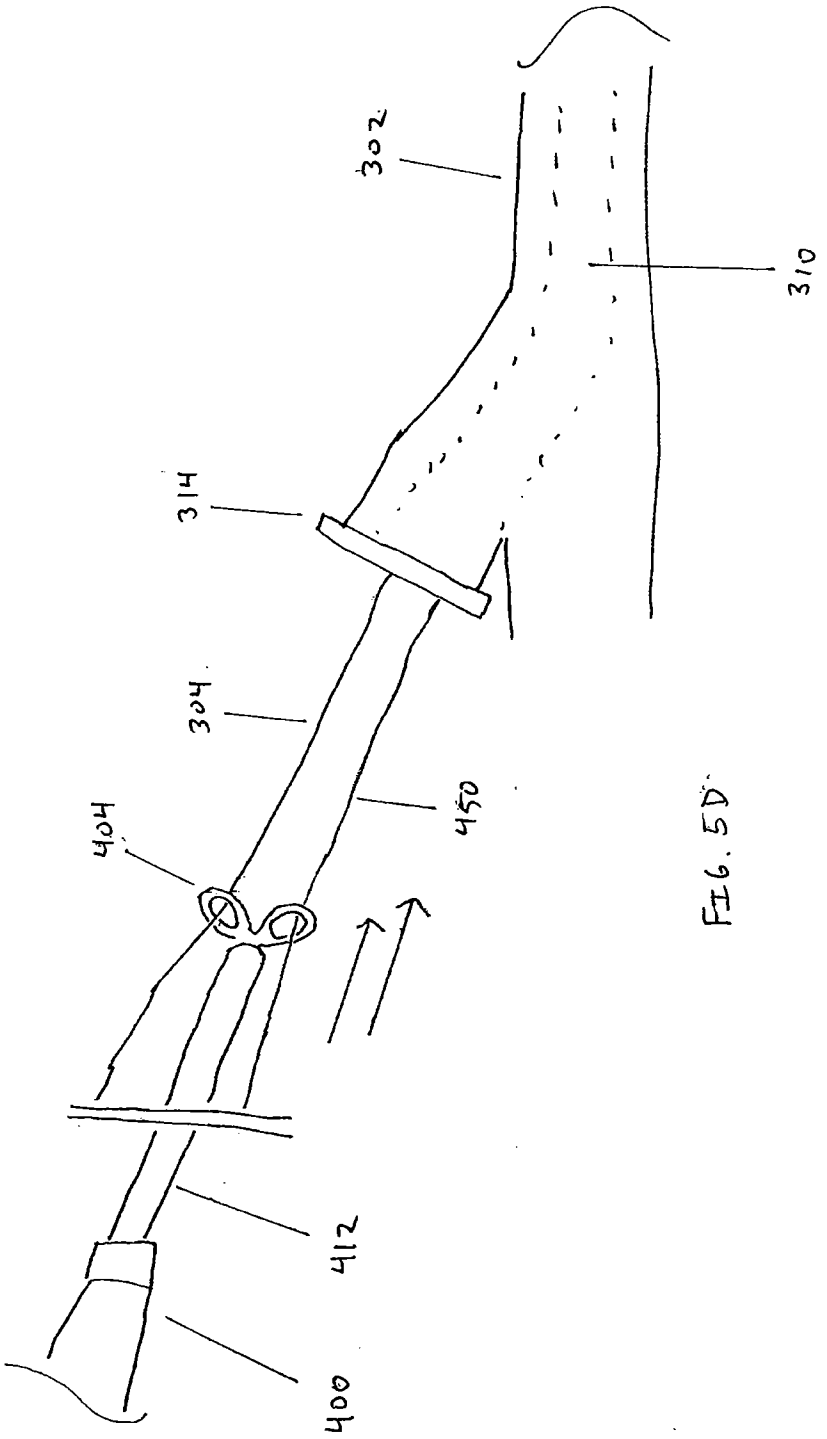

FIG. 5D

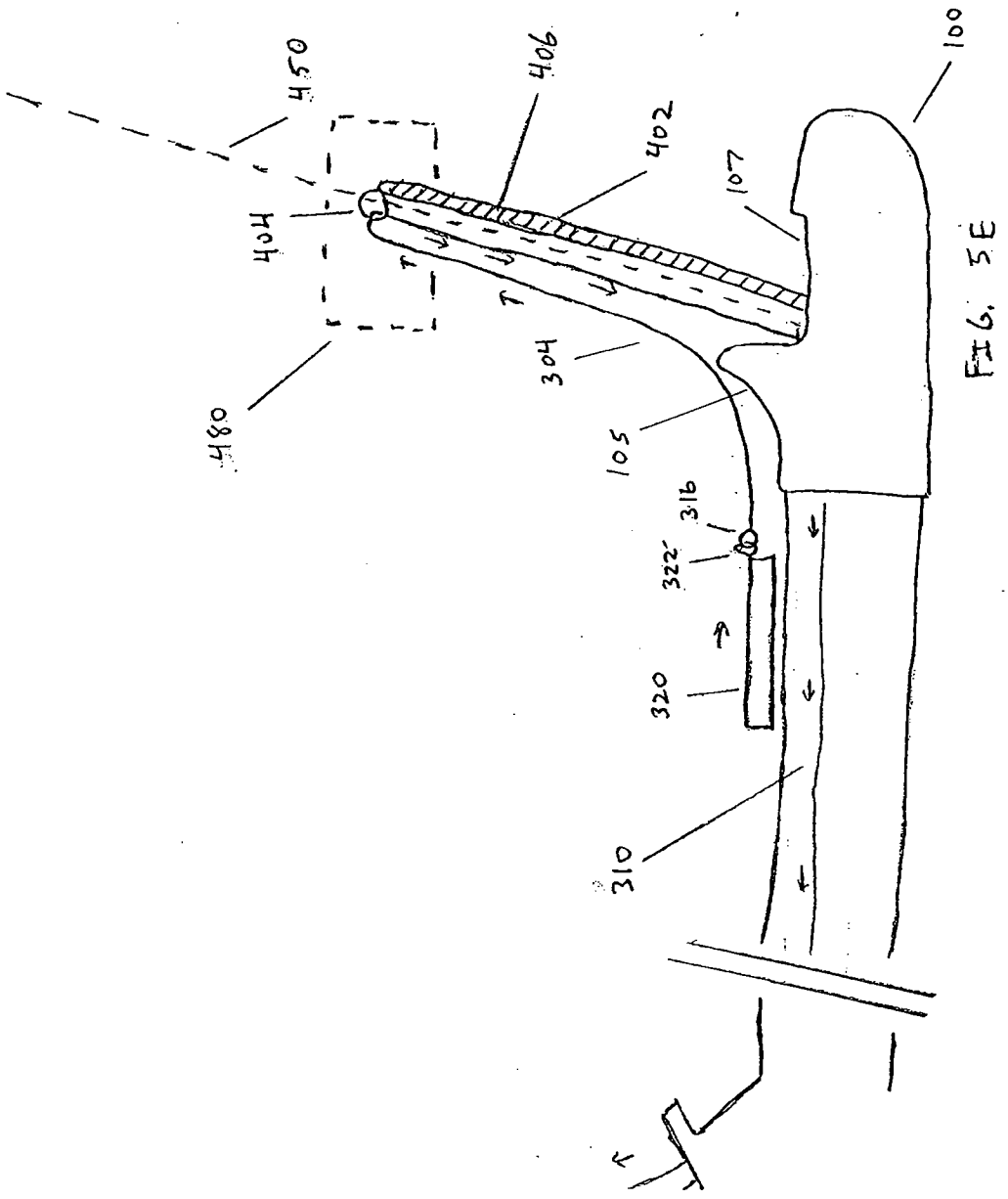

FIG. 5E

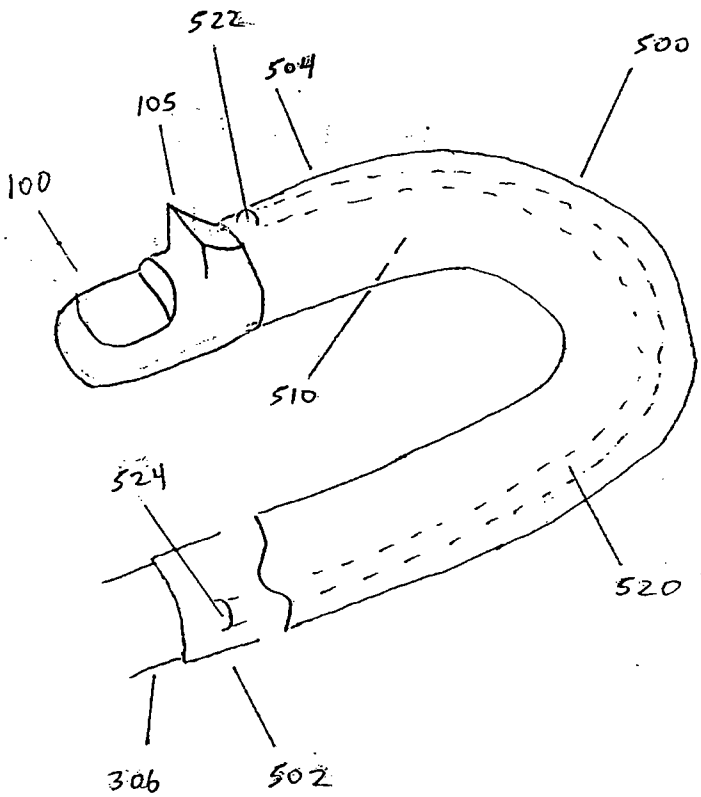

FIG. 6

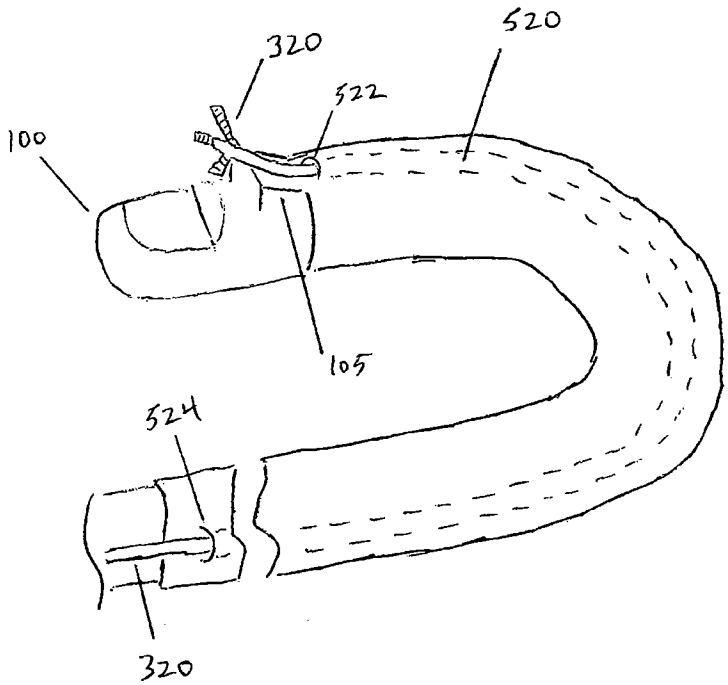

FIG. 7

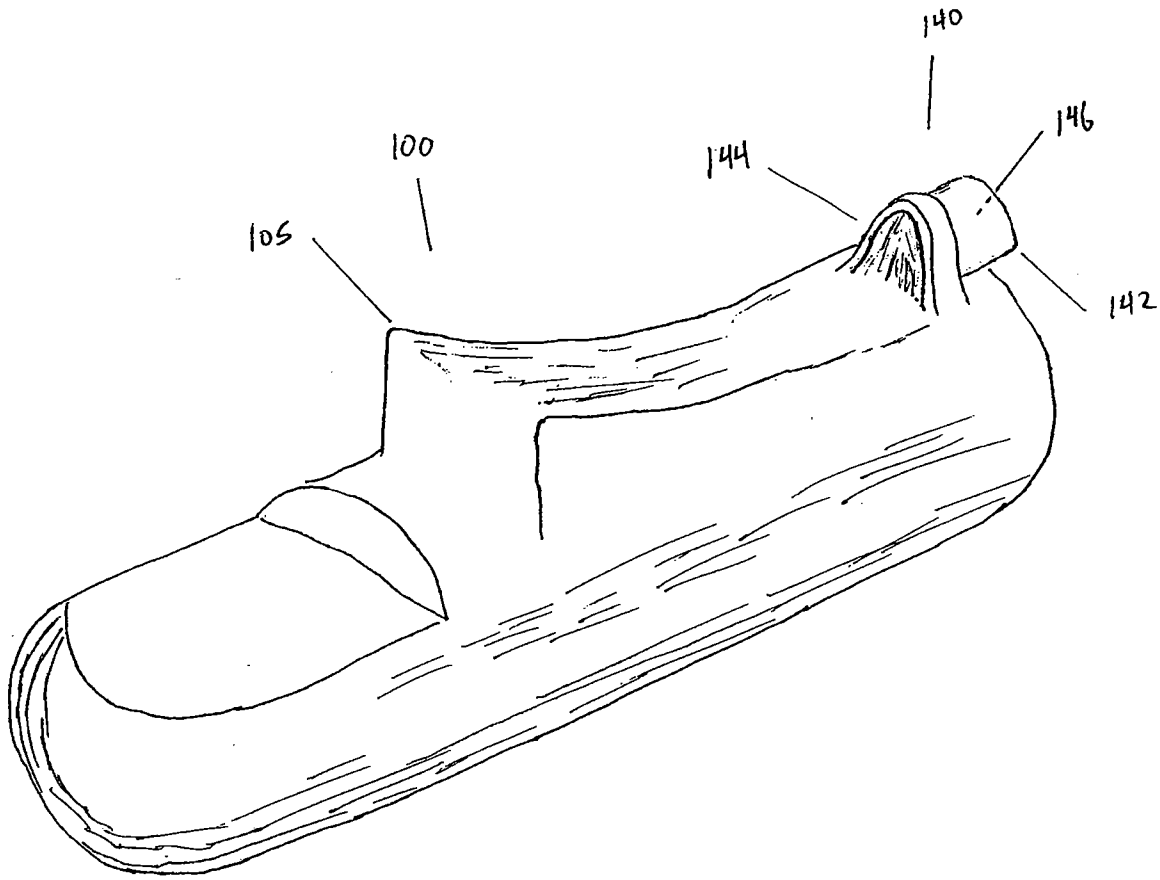

FIG. 8

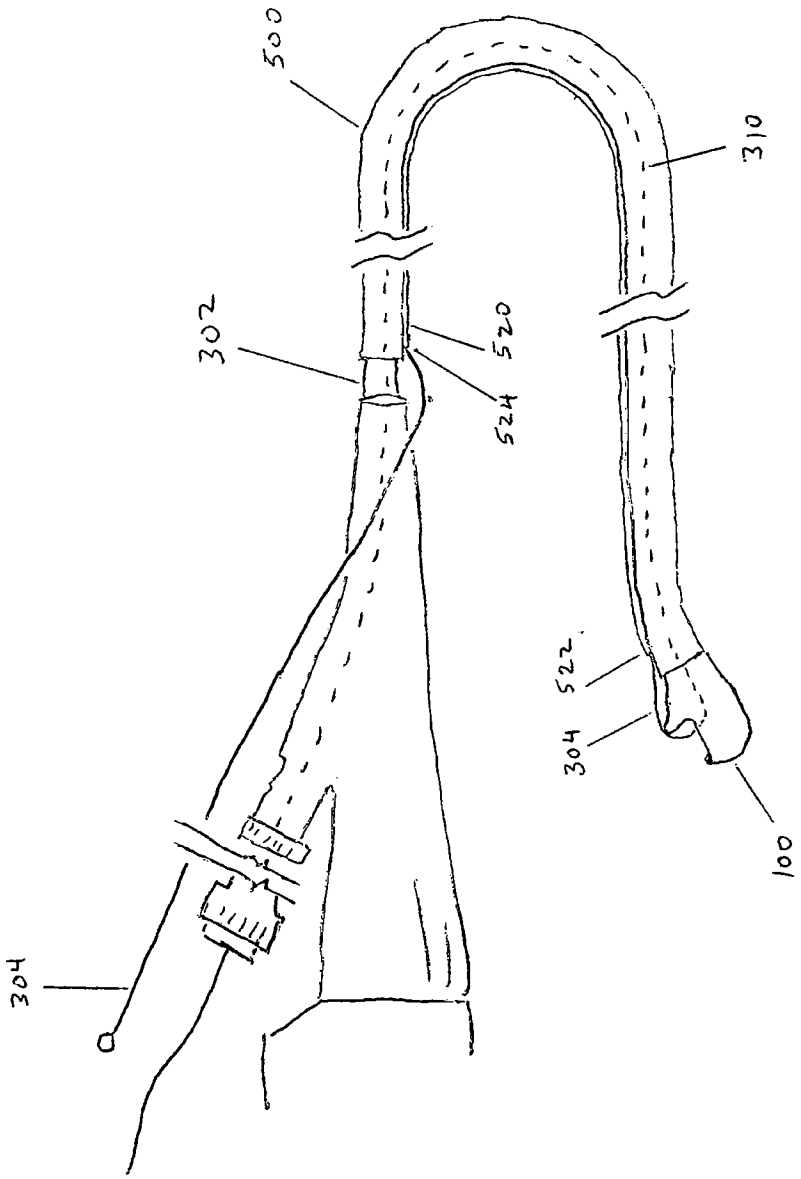

FIG. 9A

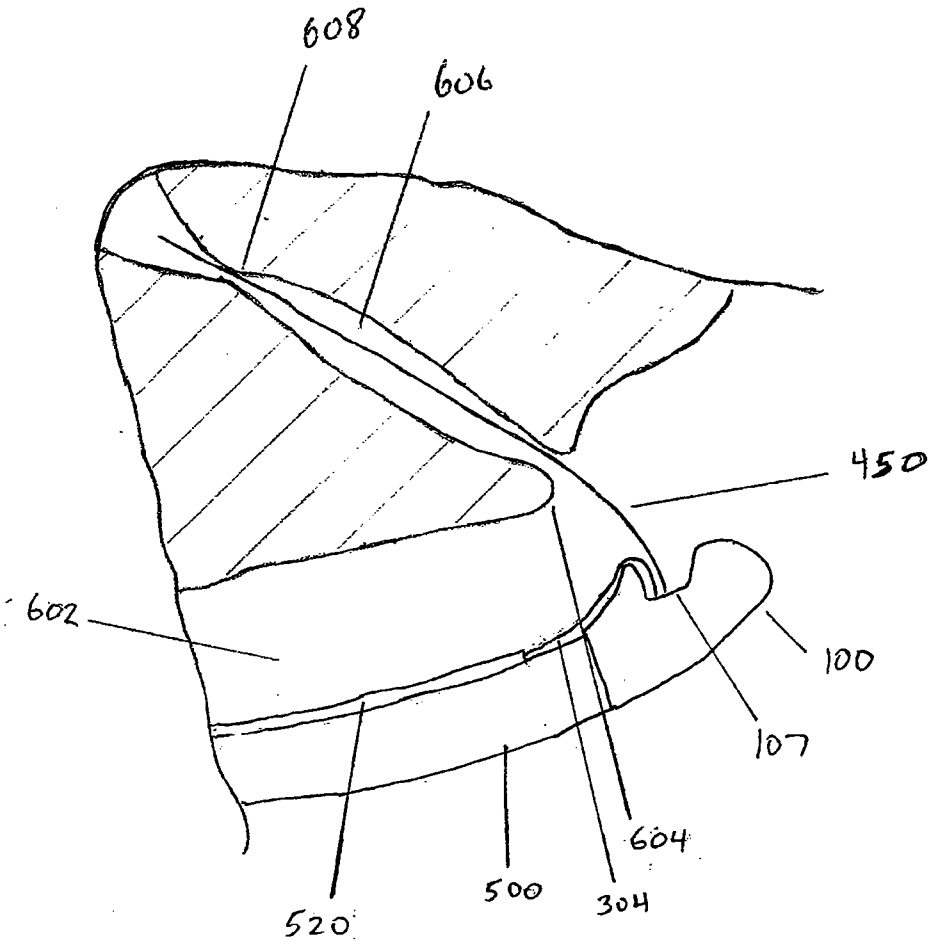

FIG. 9B

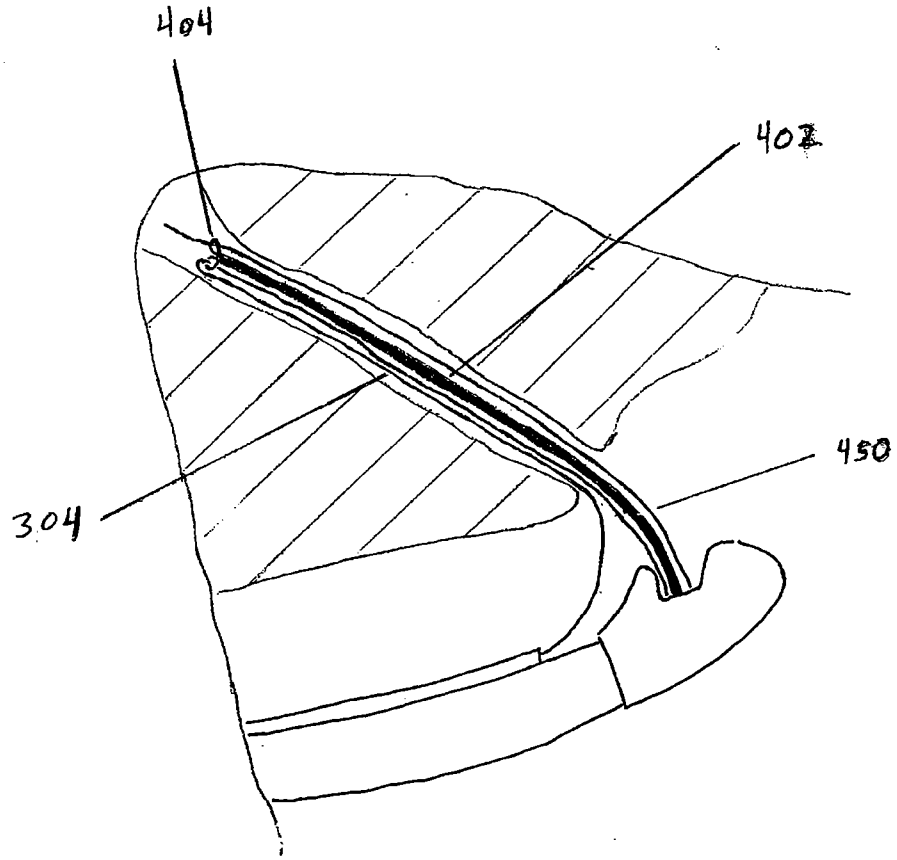

FIG. 9C

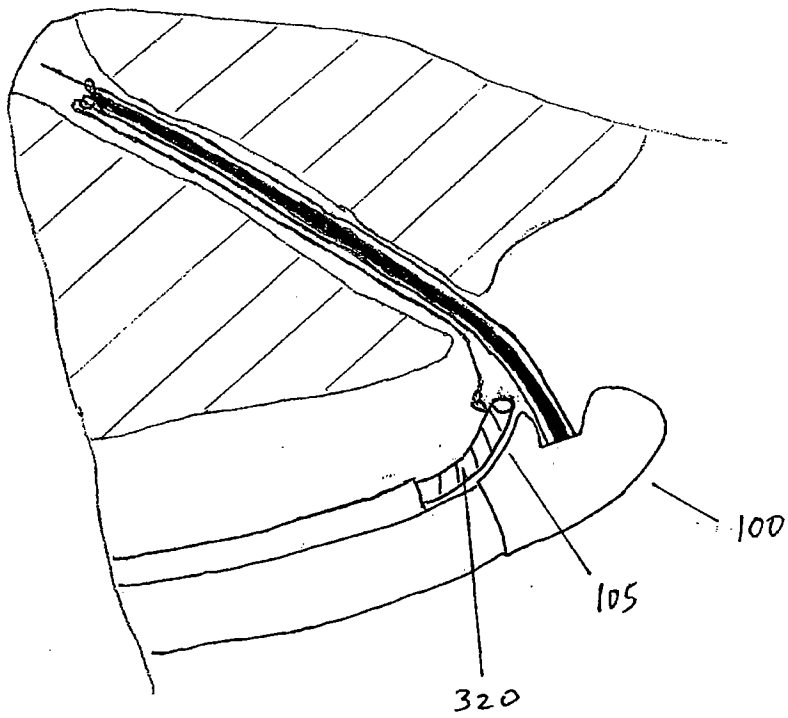

FIG. 9D

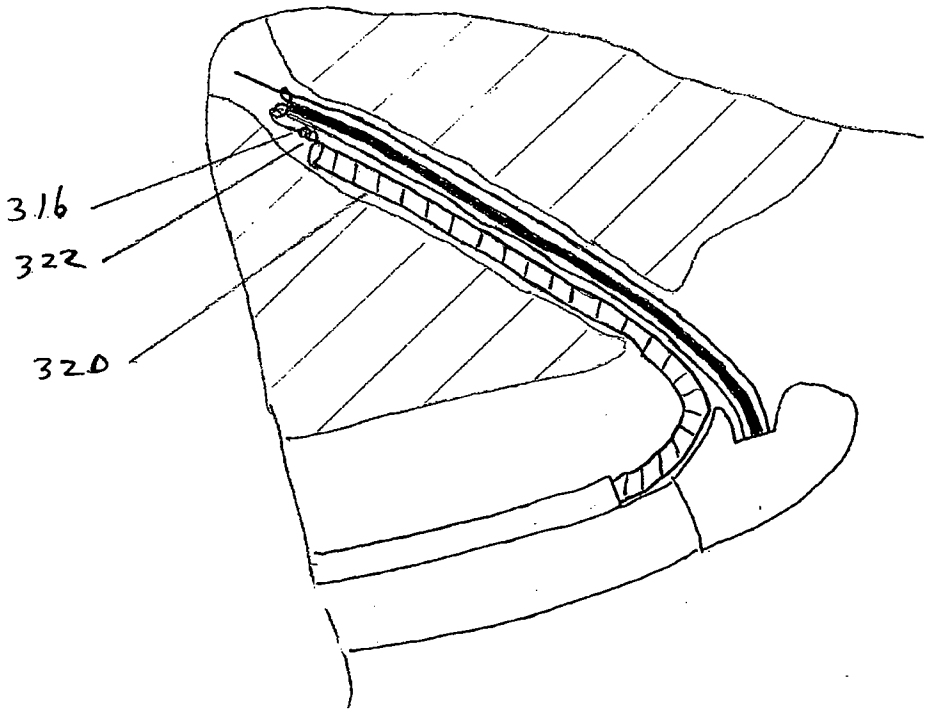

FIG. 9E

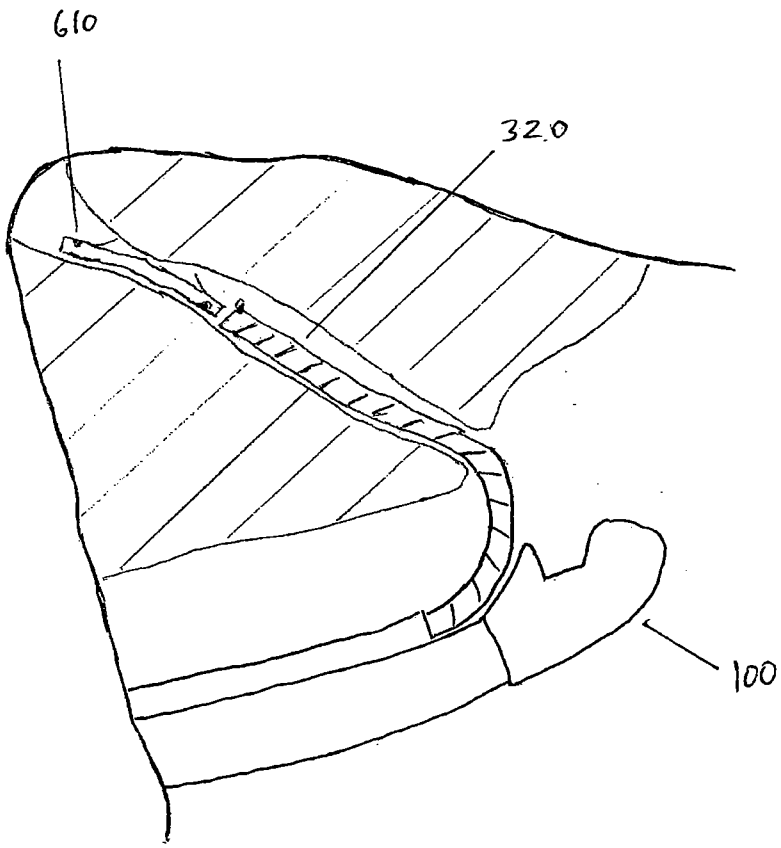

FIG. 9F

INTERNATIONAL SEARCH REPORT

International application No
PCT/US2010/060438

A. CLASSIFICATION OF SUBJECT MATTER
INV. A61B1/018 A61B1/273
ADD.

According to International Patent Classification (IPC) or to both national classification and IPC

B. FIELDS SEARCHED

Minimum documentation searched (classification system followed by classification symbols)
A61B

Documentation searched other than minimum documentation to the extent that such documents are included in the fields searched

Electronic data base consulted during the international search (name of data base and, where practical, search terms used)
EPO-Internal

C. DOCUMENTS CONSIDERED TO BE RELEVANT

Category*	Citation of document, with indication, where appropriate, of the relevant passages	Relevant to claim No.
X	US 2003/088154 A1 (ISHIBIKI KOTA [JP] ET AL) 8 May 2003 (2003-05-08) paragraphs [0039] - [0042]; figures 1,2,18 paragraphs [0129] - [0138] -----	1,3,4,7, 9,11,15, 16
X	US 2004/267092 A1 (ISHIBIKI KOUTA [JP]) 30 December 2004 (2004-12-30) figures 12-16 -----	1,3,4,7, 9,11,15, 16
X	DE 20 2008 007774 U1 (OVESCO ENDOSCOPY GMBH [DE]) 14 August 2008 (2008-08-14) sentence 27, paragraph 22; figures 2-5c -----	1,3,4,7, 9,11,15, 16

-/--

[X] Further documents are listed in the continuation of Box C.

[X] See patent family annex.

* Special categories of cited documents :

"A" document defining the general state of the art which is not considered to be of particular relevance

"E" earlier document but published on or after the international filing date

"L" document which may throw doubts on priority claim(s) or which is cited to establish the publication date of another citation or other special reason (as specified)

"O" document referring to an oral disclosure, use, exhibition or other means

"P" document published prior to the international filing date but later than the priority date claimed

"T" later document published after the international filing date or priority date and not in conflict with the application but cited to understand the principle or theory underlying the invention

"X" document of particular relevance; the claimed invention cannot be considered novel or cannot be considered to involve an inventive step when the document is taken alone

"Y" document of particular relevance; the claimed invention cannot be considered to involve an inventive step when the document is combined with one or more other such documents, such combination being obvious to a person skilled in the art.

"&" document member of the same patent family

Date of the actual completion of the international search	Date of mailing of the international search report
2 May 2011	17/05/2011

Name and mailing address of the ISA/	Authorized officer
European Patent Office, P.B. 5818 Patentlaan 2 NL - 2280 HV Rijswijk Tel. (+31-70) 340-2040, Fax: (+31-70) 340-3016	Rivera Pons, Carlos

INTERNATIONAL SEARCH REPORT

International application No
PCT/US2010/060438

C(Continuation). DOCUMENTS CONSIDERED TO BE RELEVANT

Category*	Citation of document, with indication, where appropriate, of the relevant passages	Relevant to claim No.
A	US 6 605 033 B1 (MATSUNO SHINICHI [JP]) 12 August 2003 (2003-08-12) the whole document	1-19
A	EP 1 284 120 A1 (HERRMANN INGO F PROF DR [DE]) 19 February 2003 (2003-02-19) the whole document	1-19

INTERNATIONAL SEARCH REPORT

Information on patent family members

International application No
PCT/US2010/060438

Patent document cited in search report	Publication date	Patent family member(s)	Publication date
US 2003088154 A1	08-05-2003	NONE	
US 2004267092 A1	30-12-2004	CN 1638685 A	13-07-2005
		WO 03070086 A1	28-08-2003
		JP 3668461 B2	06-07-2005
		JP 2003245244 A	02-09-2003
DE 202008007774 U1	14-08-2008	EP 2296561 A1	23-03-2011
		WO 2009150186 A1	17-12-2009
US 6605033 B1	12-08-2003	DE 10030482 A1	01-03-2001
		JP 3634671 B2	30-03-2005
		JP 2001000388 A	09-01-2001
EP 1284120 A1	19-02-2003	DE 10139153 A1	27-02-2003