US 20030193780A1

(19) United States

(12) Patent Application Publication

(10) Pub. No.: US 2003/0193780 A1

(43) Pub. Date: Oct. 16, 2003

Morrow et al.

(54) MODULAR SPRAY COOLING SYSTEM FOR ELECTRONIC COMPONENTS

(75) Inventors: **Ernest J. Morrow**, Monticello, FL (US); **Sally M. Sellers**, Tallahassee, FL (US); **Gary D. Knudsen**, Tallahassee, FL (US)

Correspondence Address:
**BROOKS & KUSHMAN**
**1000 TOWN CENTER 22ND FL**
**SOUTHFIELD, MI 48075**

(73) Assignee: **General Dynamics Land Systems, Inc.**, Sterling Heights, MI

(21) Appl. No.: **10/120,993**

(22) Filed: **Apr. 11, 2002**

**Publication Classification**

(51) **Int. Cl.**[7] ..... **H05K 7/20**

(52) **U.S. Cl.** ..... **361/700**; 257/714; 165/104.33

(57) **ABSTRACT**

A modular spray cooling system **10** for cooling electronic components in enclosures containing electronic components that dissipate heat and therefore require cooling. The modular system is mounted in a sealed enclosure **12** with an inside wall **14.** A spray cooling module **26** is detachably mountable within the sealed enclosure **12.** The coolant is distributed to a spray manifold card **48** that is provided with nozzles. Localized cooling is accomplished with the use of individual nozzles **17.** The spray cooling module **26** atomizes the evaporative coolant through nozzles **22** so that liquid droplets of the coolant are delivered to the electronic components, and cooling of the components occurs upon evaporation. A method for cooling electronic components comprises the steps of: providing a sealed enclosure **12;** priming the sealed enclosure **12** with an evaporative coolant that recirculates therewithin; detachably placing within the enclosure one or more sealed circuit card assemblies **24** containing the electronic components to be cooled; a spray cooling module **26** within the enclosure and delivering power to a pump within a spray cooling module **26** that is also detachably mountable within the sealed enclosure **12.**

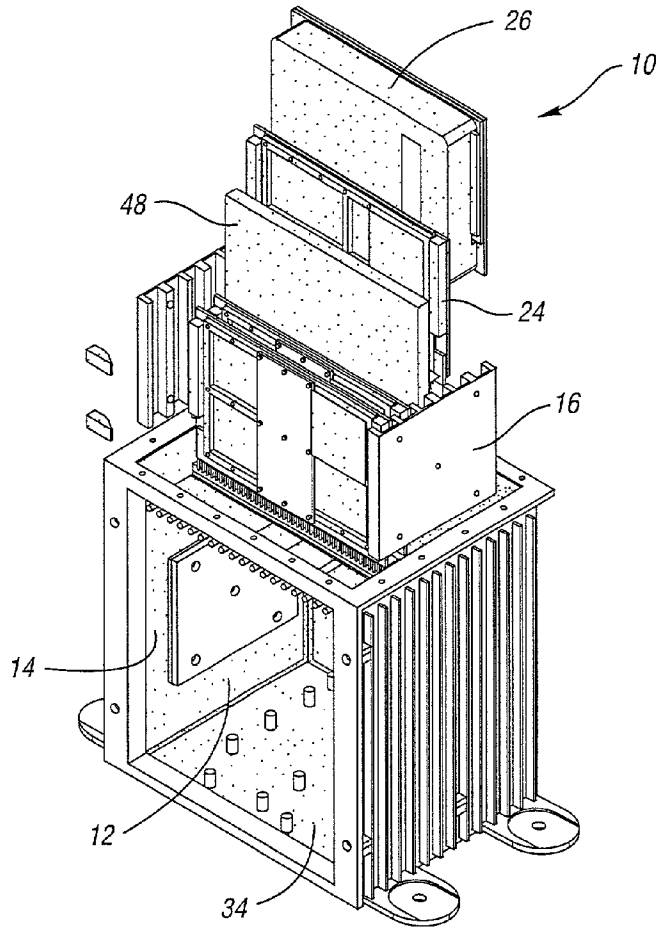

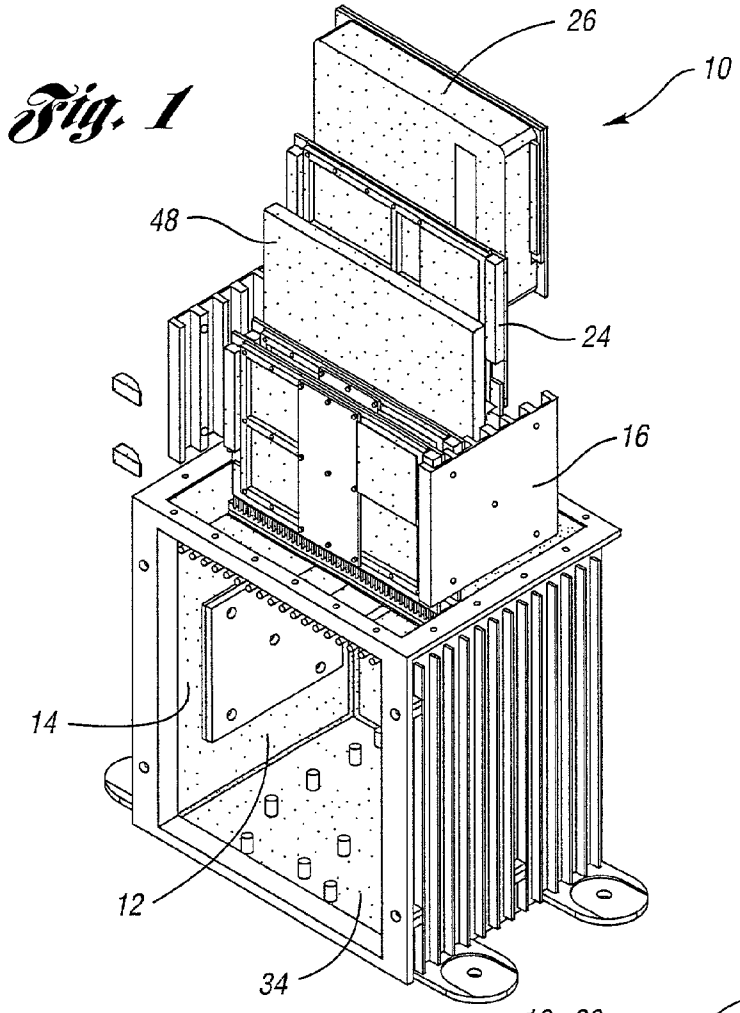


Fig. 1

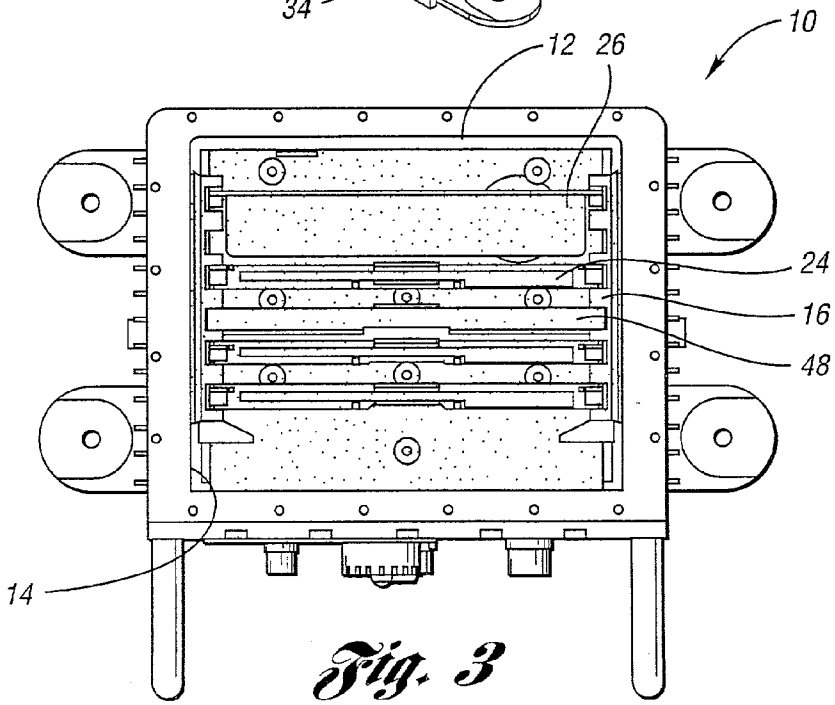


Fig. 3

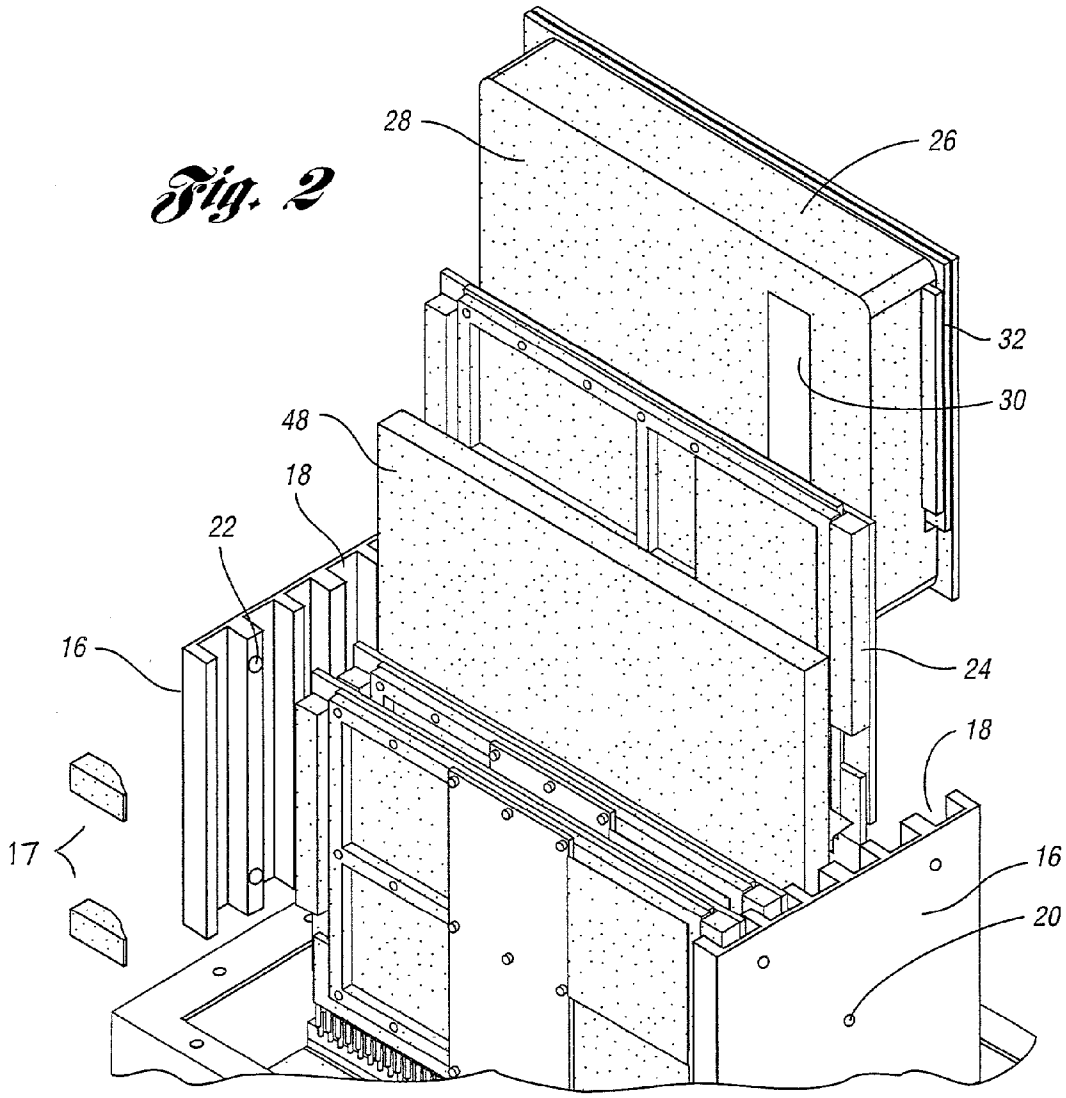


Fig. 2

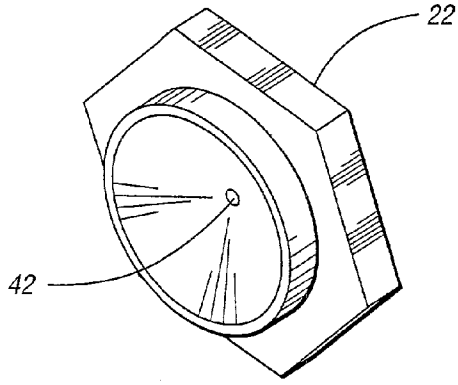


Fig. 4

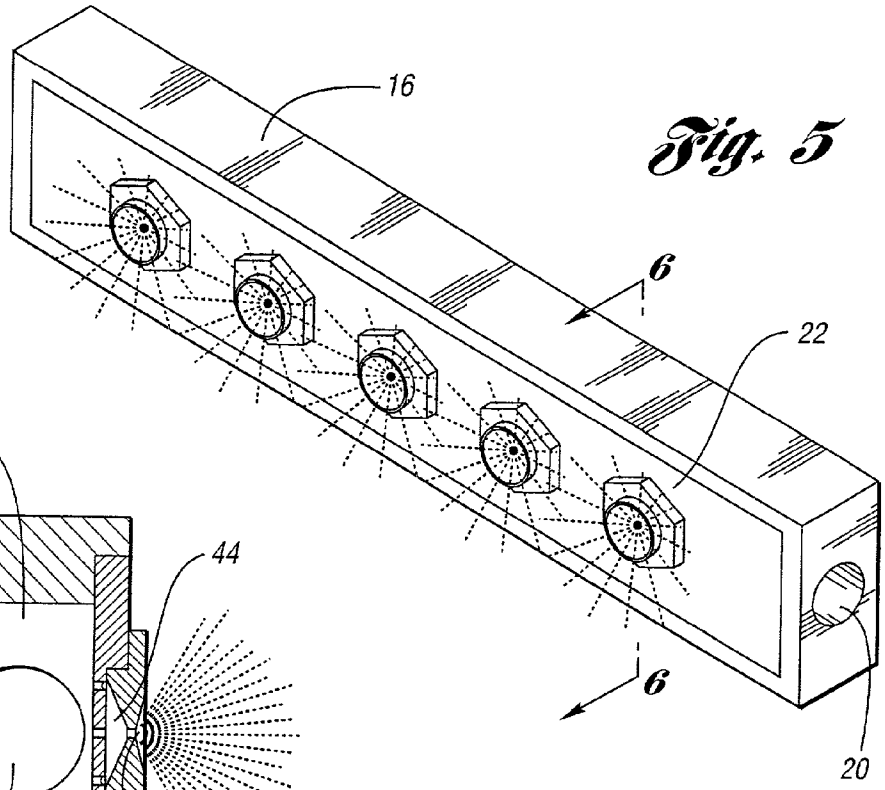


Fig. 5

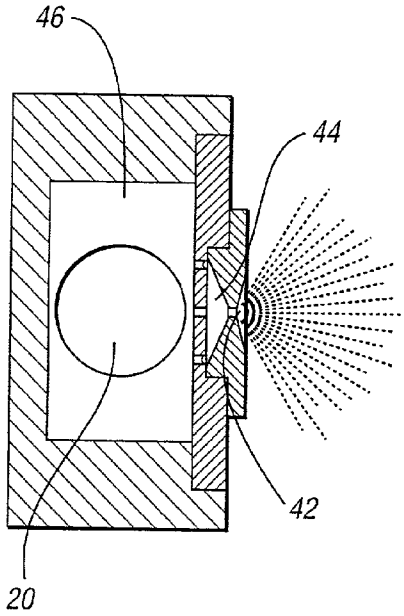


Fig. 6

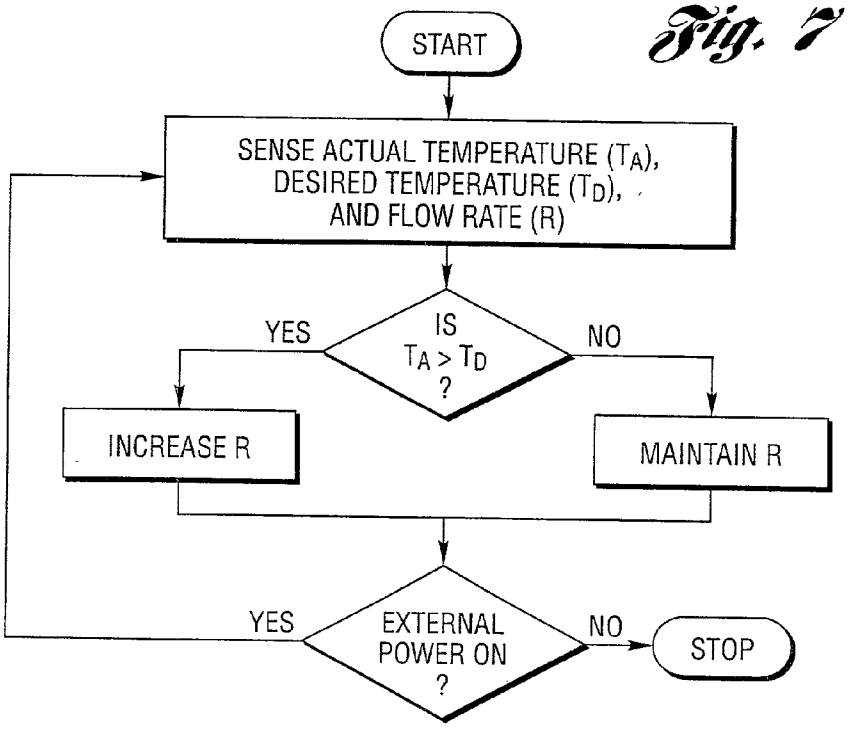


Fig. 7

# MODULAR SPRAY COOLING SYSTEM FOR ELECTRONIC COMPONENTS

## BACKGROUND OF THE INVENTION

[0001] 1. Field of the Invention

[0002] This invention relates to a modular spray cooling system and its method of use to cool components that are used in an electronic circuit which requires control of its operating temperature for effective functioning.

[0003] 2. Background Art

[0004] Today, the quest continues for delivering higher electronic power in smaller packages. One aim of the engineer is to design systems, the temperatures of which can be maintained within acceptable limits when subjected to higher electrical load factors. Additionally, the packaging engineer contends with the problems of efficient use of space.

[0005] To use limited space efficiently, circuit card guides conventionally are provided to support electronic components or printed circuit cards within an enclosure. The support arrangement provides stability and restraint under shock and vibration. Also, the arrangement often provides a heat path from a component to its housing. Typically, such arrangements locate electronic cards so that they lie parallel with each other, often with only a narrow space between adjacent cards. Each card may be electronically connected to a plate or backplane that lies perpendicular to the circuit cards. Because of the proximity of the cards within the enclosure and the electrical power generated, heating and consequent temperature rise often occurs if unchecked.

[0006] It is known that one way to remove such heat is to deploy fans which draw air over the heated component so that circulation removes heat primarily by convection. But spatial constraints often inhibit efficiency because air circulation is often insufficient to remove the heat generated. One adverse consequence is that the thermal tolerances of the electronic components may be exceeded.

[0007] U.S. Pat. No. 5,880,931 which issued on Mar. 9, 1999 discloses a spray-cooled circuit card cage which seals the enclosure and uses spray plates that release a mist of fine droplets of a coolant fluid. The '931 disclosure observes that considerable cost is involved in sealing the enclosure and supporting each circuit card adjacent to an associated spray plate. The system requires pressure to be applied from an exogenous source to a fluid entry port. Id., Col. 6, lines 47-48.

[0008] Also, illustrative of prior art approaches is an evaporative spray coolant for cooling a heat source, as described in U.S. Pat. No. 5,220,804, which issued on Jun. 22, 1993.

## SUMMARY OF THE INVENTION

[0009] In light of problems that are unsolved by previous approaches, it would be desirable to provide a retrofittable cooling system for enclosures that contain electronic components or conductors. As a result, such a retrofittable cooling system may upgrade the enclosure so that it may contain components that dissipate heat at a higher rate. If so, redesign of the enclosure or housing can be avoided. Additionally, savings in space and weight can be realized and expenditures of time and money can be reduced.

[0010] The invention is a self-contained modular spray cooling system for cooling electronic components. The system has a sealed enclosure with an inside wall. Attached to the inside wall is a number of plates that include slots which enable sealed circuit card assemblies containing the electronic component to be detachably accommodated. A spray cooling module is removably mountable in a slot near one or more of the sealed circuit card assemblies within the sealed enclosure.

[0011] Additional features include a remotely located plate that can optionally be mounted in a card slot. The plate can optionally support individual spray nozzles and/or valves for recovering condensed fluid. In one embodiment, slotted plates on an inside wall may also contain coolant passages that provide a flow of an evaporative coolant.

[0012] The modular spray cooling system includes an evaporative coolant, distributed as fine droplets which are evaporated at least partially upon contact with the electronic components. Some of the coolant evaporates before condensation upon contact with a cooled inside wall of the sealed enclosure or with one of the plates. The condensate collects in a reservoir within the sealed enclosure. Coolant passages lead the condensed evaporative coolant from the reservoir to a pump for reuse within the sealed enclosure.

[0013] Thus, the system is basically self-contained. It requires no remotely-located plumbing or propellant. Its design allows for the ready removal and replacement of the electronic components that are cooled therewithin.

[0014] The invention also includes a method for cooling electronic components. It comprises the steps of:

[0015] providing a modular retrofit to an existing sealed enclosure having an inside wall;

[0016] locating a plurality of plates defining slots, the plurality of plates being attached to the inside wall, with the option of at least some of the plurality of plates having coolant passages;

[0017] priming the sealed enclosure with an evaporative coolant that may recirculate within the sealed enclosure through the coolant passages; and

[0018] delivering power to a spray cooling module that is also detachably mountable within the sealed enclosure. The spray cooling module atomizes the liquid coolant through nozzles so that liquid droplets of the coolant are delivered to the electronic component, are vaporized, remove heat associated with the latent heat of vaporization, and thus cool the components.

## BRIEF DESCRIPTION OF THE DRAWINGS

[0019] **FIG. 1** is an exploded view of a modular spray cooling system according to the present invention;

[0020] **FIG. 2** is an enlargement of a portion thereof;

[0021] **FIG. 3** is a top plan view thereof, with a top plate removed;

[0022] **FIG. 4** is a quartering perspective view of one of a number of nozzles that are provided within a sealed housing of the present invention;

[0023] **FIG. 5** illustrates an array of nozzles that are provided, for example, along the sides of the plates within the sealed housing;

[0024] **FIG. 6** is a cross-sectional view of a nozzle taken along the line **6-6** of **FIG. 5**; and

[0025] **FIG. 7** is a logic flow diagram illustrating a series of processes and decisions made by a controller within the spray cooling module.

## DETAILED DESCRIPTION OF THE PREFERRED EMBODIMENT(S)

[0026] The invention relates to a system and method for cooling electronic components. Turning first to FIGS. **1-3** taken together, the system **10** is modular, and thus retrofittable, as suggested by **FIG. 1**, in that individual members of the modular spray cooling system **10** may be readily removed, inserted, or replaced. The system **10** is a state-changing cooling system in which an evaporative fluid exists in a liquid state, a finely dispersed droplet state, and in a vapor state.

[0027] With particular reference to FIGS. **1-2**, it can be seen that the system **10** includes a self-contained, sealed enclosure **12** that has an inside wall **14**. Attached to the inside wall **14** are plates **16** that define various slots **18**. Optionally, several of the plates **16** define coolant passages that duct the evaporative coolant.

[0028] The electronic components to be cooled are contained within one or more sealed circuit card assemblies **24**. Each assembly is detachably accommodated by one or more slots.

[0029] Also within the sealed enclosure **12** is a spray cooling module **26**. This module includes a housing **28** within which a pump **30** and a controller **32** are accommodated. Since the pump **30** is located within the housing **28** of the spray cooling module **26**, no external plumbing or fluid passages are required outside the modular spray cooling system **10**. Preferably, the pump **30** is a self-priming gear pump. In a preferred embodiment, the spray cooling module **26** includes a filter.

[0030] Continuing with primary reference to **FIG. 1**, in a vertical orientation, the condensed cooling fluid collects in a reservoir **34** which preferably is formed at the lowest point of the sealed enclosure. Coolant passages (e.g. a flexible tube), such as those depicted by the reference numeral **20**, channel the coolant to one or more ports which serve as fluid inlets to the pump **30** that is housed within the spray cooling module **26**.

[0031] FIGS. **4-6** illustrate details of the nozzles **22** through which the evaporative coolant is distributed. Also depicted in **FIG. 5** is a coolant flow passage **20** which is defined within one of the plates **16**. In one embodiment, the plates **16** may be hollow, so that their interstices may define plenum or manifold **46** that contains the evaporative coolant and thus is in common communication with the nozzles **22**.

[0032] For a constant liquid flow rate, the manner in which the droplets cover the components to be cooled can have a significant impact on heat transfer. Such spray parameters include drop diameter, drop velocity, and the pattern that with which the droplets impact the electronic device. Increasing the heat transfer rate per volume of fluid will result in less fluid required for the system, and decrease the pump and filter sizes. This in turn leads to less space requirements.

[0033] Varying the nozzle size **42** and shape, and the swirl chamber **44** can alter the spray pattern achieved. Also, the nozzles **22** can be inserted and removed, and be tailored for the specific requirements of the position of the nozzle in relation to the electronic component to be cooled. If the spacing between the nozzle and the electronic component to be cooled is especially limited, it may desirable for the nozzle to include means for distributing the evaporative coolant substantially parallel to the plates **16**. Such means may, for example, include a suitable selection of nozzle size, the geometry of the swirl chamber **44**, and one or more impediments to perpendicular flow, such as a baffle. Alternatively, if it is desired that the coolant escape from the nozzle **22** substantially perpendicularly to the face of the plate **16**, this can be accomplished by using a nozzle that lacks impediments to perpendicular flow, and by suitable selection of geometry of the swirl chamber **44**. Thus, it will be appreciated that the nozzle plug portion of the system can be varied to provide many different spray patterns, angles of impact, droplet size, and droplet velocity. With the ability to easily change nozzle orifice, the spray manifold can be readily adjusted so that optimal spray parameters can be obtained.

[0034] If desired, a spray manifold card **48** may be detachably mountable within one or more of the slots **18**. In this configuration, the circuit card assembly containing components to be cooled may effectively be sandwiched between the spray cooling module **26** and the spray manifold card **48**. A number of nozzles **22** may also be located on the spray manifold card so that the spray can effectively cool the adjacent components. Additional cooling can also be achieved with the use of individual nozzles **17** (**FIG. 2**) that are remotely located within the enclosure.

[0035] In operation, the coolant is evaporated at least partially upon contact with the circuit card assembly **24** that contains the electronic components to be cooled. Thereafter, the vapor is condensed upon contact with an inside wall **14** of the sealed enclosure **12** or with one or more of the plates **16**. The condensate gathers in the reservoir **34** and is communicated by a coolant passage to the pump before recirculation for reuse within the sealed enclosure. Thus, least some of the coolant condenses upon an interior wall of the housing following evaporation. This phase change is typically accompanied by a rise in temperature at the wall of the housing. To extract heat from the housing, a finned surface is provided upon an external surface of the housing. This finned surface allows heat to be transferred by convection therefrom. The temperature of the housing is thereby maintained at a temperature lower than the boiling point of the coolant.

[0036] **FIG. 7** illustrates a simplified logic flow associated with the controller **32** that is contained within the spray cooling module **26**. The controller senses a signal which is representative of the actual temperature within the housing ($T_A$). The controller also stores a value representative of the desired temperature ($T_D$) and processes a signal that represents the average flow rate (R) of evaporative coolant in a previous time interval. Implicit within this disclosure is the

presence of means (not shown) for sensing actual temperature, recording desired temperature, and for sensing flow rate.

[0037] Next, a decision module within the controller compares $T_A$ with $T_D$. If the former exceeds the latter, a signal is generated which effectively increases the flow rate by augmenting the output of the pump. If the condition is not met, then the flow rate is maintained until the external power which energizes the controller is turned off.

[0038] In practicing a method for cooling electronic components using the disclosed system, the first step is to provide a spray cooling module within a sealed enclosure having an inside wall. A plurality of plates is located, each plate defining a slot. The plates are attached to the inside wall. At least some of the plates have a coolant passage. The sealed enclosure is then primed with an evaporative coolant that may recirculate within the sealed enclosure through the coolant passages.

[0039] Next, circuit card assemblies are detachably placed within the slots. Each sealed circuit card assembly contains electronic components to be cooled by the evaporative coolant. Finally, power is delivered to a pump in the spray cooling module. The spray cooling module atomizes the liquid coolant through nozzles so that liquid droplets of the coolant are delivered to the electronic component. Cooling of the component occurs through the extraction of heat associated with the latent heat of vaporization of the coolant.

[0040] Preferably, the evaporative coolant is a dielectric fluid with a relatively high breakdown voltage, i.e. up to about twice the voltage across the bus bars. As is known, a dielectric is a substance with very low electrical conductivity, i.e., is an insulator. Liquid dielectrics include hydrocarbon oils, askarel, and silicone oils. As used herein, the term "breakdown voltage" refers to the maximum voltage that the dielectric can withstand without breakdown. Beyond that voltage, considerable current passes as an arc, usually with more or less decomposition of the fluid along the path of the current.

[0041] Preferably, the evaporative fluid of the subject invention is a thermally stable liquid, such as a perfluorocarbon. One example is the Fluorinert™ electronic liquid FC-77 that is available from the 3M Company of Minneapolis, Minn. An alternative dielectric is sold under the name Flutec™ which is manufactured by F2 Chemicals Limited of Lancashire, England. The inertness of such fluids permits their use as a direct contact, single and multiple phase coolant in the electronic environment. Their high dielectric strength and low electrical conductivity render them suitable for applications in high voltage transformers and power electronics. Ideally, such fluids have a low global warming potential and zero ozone-depletion potential.

[0042] Although several dielectric fluids are suitable for use as the evaporative coolant, satisfactory results have been obtained with the product sold by 3M company of Minneapolis, Minn. under the trademark Fluorinert™. Using Fluorinert™, heat fluxes of 20 $W/cm^2$ are possible with traditional pool boiling. Other published research has suggested that heat fluxes from 25 to 160 $W/cm^2$ can be obtained. This large range of observed heat flux is in part attributable to the drop patterns at impact. To obtain high heat fluxes for a given flow rate of coolant, the spray should sustain a thin film of liquid on the surface of the device to be cooled. If the liquid film becomes too thick, vapor bubbles can be supported within the liquid film, with a consequent diminution in the advantages of spray cooling. If the film becomes too thin, localize dry out can occur. This in turn, leads to overheating. Droplet diameters in the range of 200 to 500 microns are more effective than smaller diameters. Drops with high velocities have been shown to breakup upon impact. In contrast, drops with a velocity that is too slow do not have enough momentum to penetrate the vapor generated from the heat of the components and effectively whet the surface.

[0043] If additional spray is needed to cool specific components or an especially hot card, such as a power supply, individual nozzles and spray plates can be located as needed and space permits.

[0044] The modular spray cooling system described herein can be used to retrofit existing sealed circuit card enclosures with a self-contained system that provides a wider margin in thermal design. With increased thermal capacity, faster processors can be used.

[0045] In the environment under consideration, the evaporative fluid is dispensed in liquid droplets that impact upon the electronic components. Ideally, the temperature of the liquid droplets prior to impact is just below the fluid's boiling point. In this manner, at least a portion of the incident evaporative fluid becomes vaporized, with a desired efficiency of at least 15-20%. As defined in this disclosure, "efficiency" is defined as the ratio of the actual heat transferred to the theoretical maximum heat transferred. The theoretical maximum heat transfer is the sensible and latent heat associated with 100% vaporization of the liquid impacting the surface.

[0046] While embodiments of the invention have been illustrated and described, it is not intended that these embodiments illustrate and describe all possible forms of the invention. Rather, the words used in the specification are words of description rather than limitation, and it is understood that various changes may be made without departing from the spirit and scope of the invention.

What is claimed is:

**1**. A modular spray cooling system for cooling electronic components, the system comprising:

a sealed enclosure having an inside wall, the wall having slots located thereupon;

one or more sealed circuit card assemblies containing the electronic components to be cooled by an evaporative coolant, each assembly being detachably accommodated by one or more of the slots; and

a spray cooling module that is also detachably accommodated by one or more of the slots, the spray cooling module directing the evaporative coolant toward the one or more sealed circuit card assemblies so that they are cooled by evaporation of the coolant.

**2**. The modular spray cooling system of claim 1, wherein the spray cooling module includes:

a housing;

a pump within the housing; and

a controller.

**3**. The modular spray cooling system of claim 1, further including:

a reservoir for collecting cooling fluid condensed from the one or more sealed circuit card assemblies.

**4**. The modular spray cooling system of claim 1, further including a plurality of plates attached to the inside wall of the sealed enclosure, the plates defining the slots, wherein one or more of the plurality of plates include one or more nozzles through which the evaporative spray coolant is distributed.

**5**. The modular spray cooling system of claim 1, further including a spray manifold card, at least one of the sealed circuit card assemblies being interposed between the spray manifold card and the spray cooling module.

**6**. The modular spray cooling system of claim 2, wherein the pump comprises a self-priming gear pump.

**7**. The modular spray cooling system of claim 2, wherein the spray cooling module includes a filter.

**8**. The modular spray cooling system of claim 4, wherein the evaporative coolant is evaporated at least partially upon contact with the electronic components, condensed upon contact with an inside wall of the sealed enclosure or with one of the plurality of plates, and recirculated by the pump in the spray cooling module for reuse in the sealed enclosure.

**9**. The modular spray cooling system of claim 2, also including a reservoir that collects condensed coolant.

**10**. The modular spray cooling system of claim 9, also including one or more fluid passages that enable fluid communication between the reservoir and the pump.

**11**. The modular spray cooling system of claim 4, wherein the one or more nozzles include means for distributing the evaporative spray coolant substantially perpendicularly from the plate.

**12**. The modular spray cooling system of claim 4, wherein the one or more nozzles include means for distributing the evaporative spray coolant substantially parallel to the plate.

**13**. A method for cooling electronic components, the method comprising the steps of:

providing an enclosure having an inside wall;

priming the enclosure with an evaporative coolant that may recirculate therewithin;

detachably placing one or more sealed circuit card assemblies containing the electronic components to be cooled by the evaporative coolant within the enclosure;

providing a spray cooling module within the enclosure; and

delivering power to a pump within the spray cooling module, the spray cooling module atomizing the evaporative coolant through nozzles so that droplets of the coolant are delivered to the electronic components, and cooling of the electronic components occurs upon evaporation.

* * * * *