July 21, 1925. 1,546,968

W. L. CHANDLER

MACHINE ALIGNING APPARATUS

Filed Feb. 17, 1925

Fig. 1.

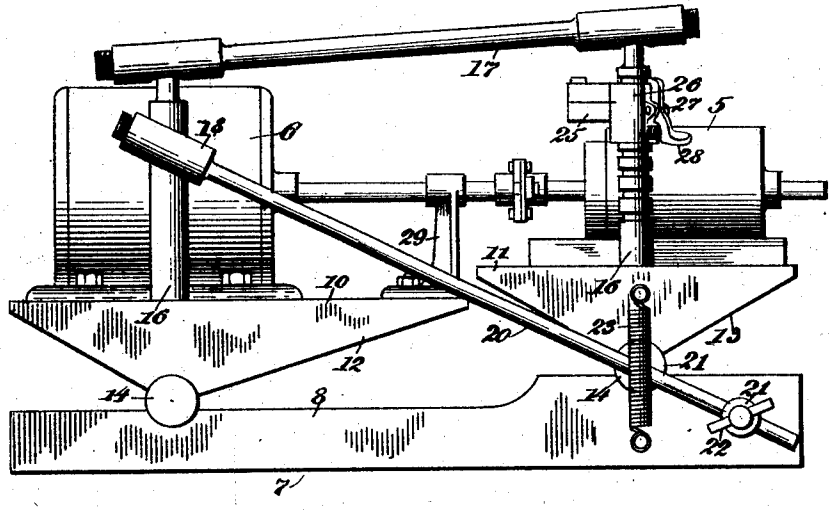

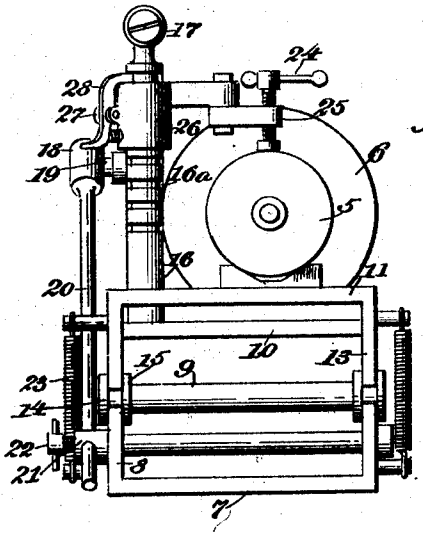

Fig. 2.

Inventor

William L. Chandler

By J. M. St. John

Attorney

Patented July 21, 1925. 1,546,968

UNITED STATES PATENT OFFICE.

WILLIAM L. CHANDLER, OF CEDAR RAPIDS, IOWA.

MACHINE-ALIGNING APPARATUS.

Application filed February 17, 1925. Serial No. 9,833.

To all whom it may concern:

Be it known that I, WILLIAM L. CHANDLER, a citizen of the United States, residing at Cedar Rapids, in the county of Linn and State of Iowa, have invented certain new and useful Improvements in Machine-Aligning Apparatus, of which the following is a specification.

This invention relates to the raising and lowering of machines to bring the axes of two machines into exact alignment, and the object of this invention is to provide apparatus whereby the operation may be performed very quickly and easily.

The apparatus as herein shown and described is designed more particularly for use in testing the electric generators of automobiles, but is applicable to many other machines which are to be coupled with axes in true alignment.

The invention is fully set forth in the description and claims following, reference being had to the accompanying drawing, in which:—

Fig. 1 is a side elevation of a device embodying my invention as in use. Fig. 2 is an elevation of the same as seen from the right of Fig. 1.

In the drawing, the numeral 5 denotes an electric generator, shown conventionally, which it is desired to test by operating at various speeds by a changeable speed motor 6, also shown conventionally. These generators differ much in size, and to bring any particular generator into exact axial alignment, vertically considered, especially, is a rather tedious and troublesome operation in connection with a motor, the height of whose axis is fixed. Unless so aligned the two machines will not operate satisfactorily, and cannot be operated with safety at high speeds at all. The device now to be described makes it possible to make the adjustment very quickly and nicely.

A base 7 has upstanding side wings 8, and across these is mounted a pair of parallel shafts 9 in semicircular notches at the tops of the wings, leaving half or more of the circumference of the shaft exposed to form pivot bearings for tables 10 and 11 having similarly formed and notched depending wings 12 and 13, respectively. All the wings are held in place laterally with respect to the pivots by lateral collars 14 and 15 formed on the shafts. As will be evident, the tables or platforms may rock a limited distance in either direction. At one side of each platform is rigidly secured a post 16, the pair being exactly of the same length, and connected pivotally at the upper ends by a connecting-rod 17. In practice ball and socket pivots of a familiar type are preferred, and their distance apart should exactly coincide with that of the lower pivots. The platforms are thus made to rock in unison, and whatever may be their angle the planes of their upper surfaces, made perfectly flat, will be exactly parallel. The platforms are held at any desired angle by a tie-rod 18 pivoted (preferably by ball-and-socket joint) at 19, and having a stem 20 passing through a rockable guide 21 provided with a clamping hand-screw 22.

So long as the platforms are weighted and in normal position they keep their places without any other means for holding them together. Springs 23 are shown connecting the smaller platform with the base, and of course the same may be applied to the larger platform, if necessary.

In Fig. 1 the platforms are shown in a level position, with the pivots for the smaller platform somewhat elevated. The electric generator is shown mounted on a V-block, and in this case its shaft aligns with that of the motor with the platforms in this level position. With a larger generator the platforms would tip to the left, and contrawise for a smaller generator.

The generator is held in position on the platform by a clamping screw 24 in a toggle-arm 25 mounted slidably on the adjacent post. This is grooved at 16[a], and to the hub 26, suitably provided with lugs 27, is pivoted a spring-controlled latch 28. The toggle may thus be quickly raised or lowered on the post, and clamping pressure applied by a few turns of the screw. The jointed construction of the toggle arm, revoluble on the post, makes it possible to apply the clamping pressure at any desired point.

With a motor shaft as long relatively as shown in Fig. 1, an outboard bearing 29 is desirable, to prevent lateral vibration, especially when running at high speed.

Having thus described my invention, I claim:

1. In machine-aligning apparatus, the combination of a base, a pair of rockable platforms mounted thereon by parallel pivots, a connecting-rod disposed in a plane parallel to the plane of said pivots, and piv-

ots connecting the rod with the respective platforms at points equally spaced from the supporting pivots, and at the same distance apart as said supporting pivots, whereby the platforms rock in parallelism, as specified.

2. In machine-aligning apparatus, the combination of a base, a pair of rockable platforms mounted thereon by supporting parallel pivots, upstanding posts carried by the platforms, and a connecting-rod pivotally engaging said posts at points equally spaced from the respective supporting pivots, and equally spaced transversely thereto.

3. In machine-aligning apparatus, the combination of a base, a pair of rockable platforms mounted thereon by supporting parallel pivots, upstanding posts carried by the platforms, a connecting-rod pivoted to the posts in parallelism with the supporting pivots longitudinally and vertically, and means adapted to secure the platforms in position at any desired angle.

4. In machine-aligning apparatus, the combination of a base, transversely parallel pivots thereon, a pair of platforms carried by said pivots, upstanding members having pivots disposed in double parallelism (longitudinally and vertically) with the supporting pivots, a connecting-rod for the upper pivots, a tie-rod pivoted to one of said members, a guide therefor, and means for securing the tie-rod in said guide.

5. A machine-aligning device, comprising a base with upstanding sides, parallel pivot members mounted on said sides and partially seated therein, platforms with depending sides partially seated on said pivot members and rockable thereon, upstanding posts carried by the platforms, a connecting-rod pivoted to said upstanding members, the supporting pivots and rod-connected pivots forming a parallelogram, a tie-rod pivoted to one of the members, a guide therefor attached rockably to the base, and means for securing the tie rod in said guide.

6. An adjustable support for two machines, comprising a base with upstanding sides, a pair of platforms with depending sides coinciding with the sides of the base, parallel pivot-shafts partially seated in the sides of the base, and provided with lateral collars to confine the base sides and depending platform wings, and means adapted to impart coincident movement to the platforms, and to hold them in any desired position, the planes of their supporting surfaces being always parallel.

7. In machine-aligning apparatus, a supporting base, a pair of platforms rockable thereon, posts carried by said platforms, a pivoted cross-connecting rod therefor, means to secure the platforms at any desired angle, and a machine clamping device consisting of a toggle-arm slidable on one of the posts, with means for attaching it thereto, and a terminal clamping screw.

8. In machine-aligning apparatus, a supporting base having upstanding slides, parallel pivot-shafts partially seated in said sides, a pair of platforms with depending sides partially seated on the pivot-shafts, springs adapted to hold the base and platforms together, and means adapted to give concurrent and parallel movement to the platforms, and to hold them at any desired angle.

In testimony whereof I affix my signature in presence of two witnesses.

WILLIAM L. CHANDLER.

Witnesses:
F. W. ARMSTRONG,
GEORGE MINGO.