US00D352329S

United States Patent [19]

Takiya

[11] Patent Number: Des. 352,329

[45] Date of Patent: ** Nov. 8, 1994

[54] **ELECTRONIC GAME HOUSING**

[75] Inventor: **Kazuyuki Takiya**, Tokyo, Japan

[73] Assignee: **Epoch Company Ltd.**, Tokyo, Japan

[**] Term: **14 Years**

[21] Appl. No.: **11,107**

[22] Filed: **Jul. 27, 1993**

[30] **Foreign Application Priority Data**

Jun. 2, 1993 [JP] Japan 5-16280

[52] **U.S. Cl.** **D21/13**

[58] **Field of Search** ..... 273/148 B, DIG. 28, 273/433–438; D21/48, 13, 1; D14/114, 124, 217

[56] **References Cited**

U.S. PATENT DOCUMENTS

D. 262,718	1/1982	Dweck	D21/13
D. 264,356	5/1982	Nagel	D21/13
D. 264,732	6/1982	Hanzawa	D21/13
D. 265,407	7/1982	Hanzawa	D21/13
D. 328,474	8/1992	Chen	D21/13
D. 336,315	6/1993	Kitaue	D21/13
D. 342,762	12/1993	Wing	D21/48
4,969,647	11/1990	Mical et al.	273/433 X
5,026,051	6/1991	Lowe et al.	273/435
5,091,832	2/1992	Tortola et al.	362/109
5,161,803	11/1992	Ohara	273/DIG. 28 X
5,184,830	2/1993	Okada et al.	273/433

FOREIGN PATENT DOCUMENTS

0431723	6/1991	European Pat. Off. .
3-193074	8/1991	Japan .

OTHER PUBLICATIONS

Playthings, Apr. 1980, p. 8, shown by Arron.
Playthings, Sep. 1981, p. 65, shown by arron.
"A. SF–2 Pro–Action Strategy Football," Playthings, Feb., 1980, p. 102.
"Electronic Sea Battle," Playthings, Apr., 1979, p. 28.
Football Game, Playthings, Apr. 1980, p. 52.

Primary Examiner—Prabhakar G. Deshmukh

[57] **CLAIM**

The ornamental design for an electronic game housing, as shown and described.

DESCRIPTION

FIG. **1** is a perspective view of an electronic game housing of may new design;
FIG. **2** is a plan view thereof;
FIG. **3** is a front elevational view thereof;
FIG. **4** is a right side view thereof;
FIG. **5** is a bottom view thereof; and,
FIG. **6** is a rear view thereof.
A left side view is shown symmetrically with the right side view.

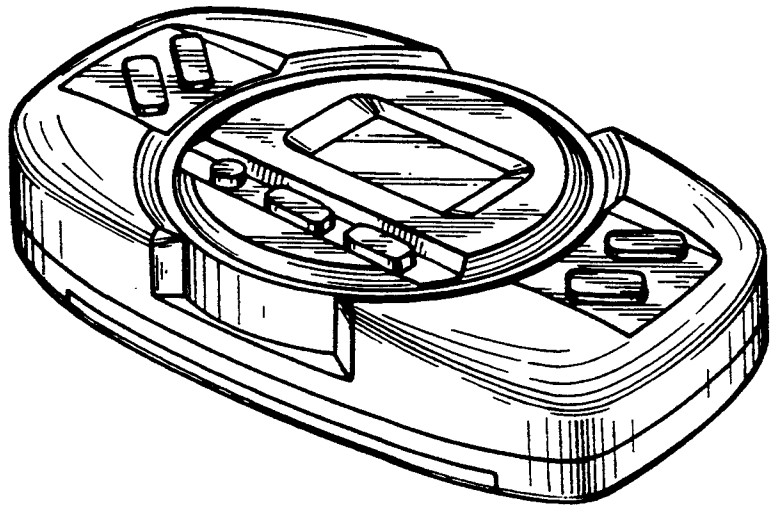

FIG. 1

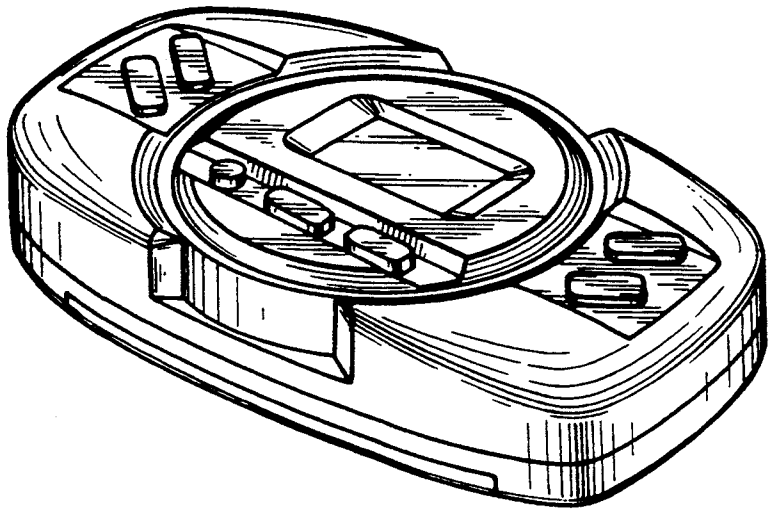

FIG. 2

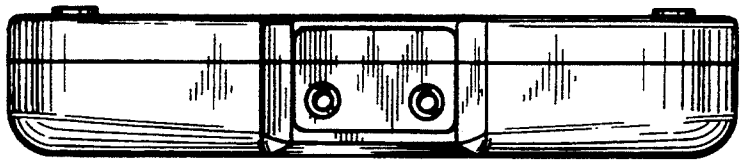

FIG. 3

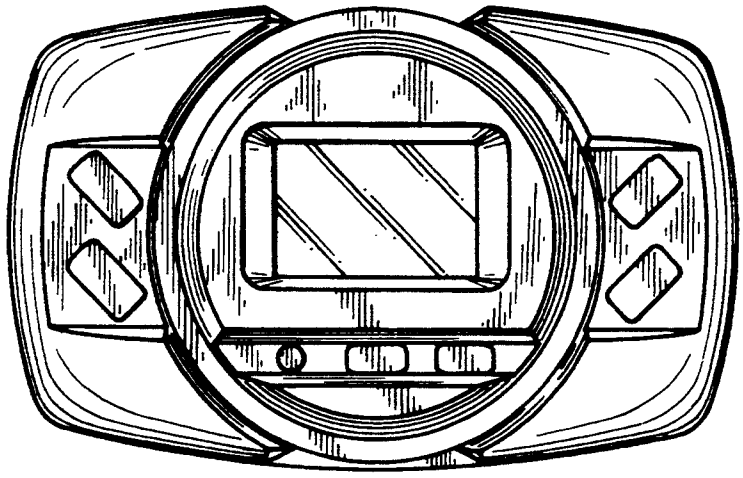

FIG. 4

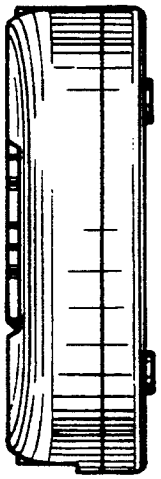

FIG. 5

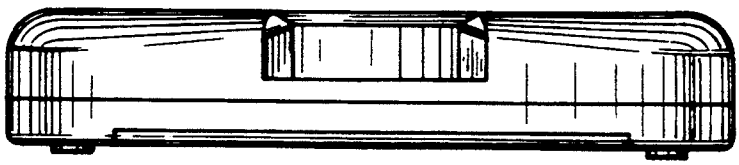

FIG. 6

