March 28, 1967 W. A. DENNY ET AL 3,311,456

APPARATUS FOR INCINERATING A WASTE GAS STREAM

Filed March 21, 1963

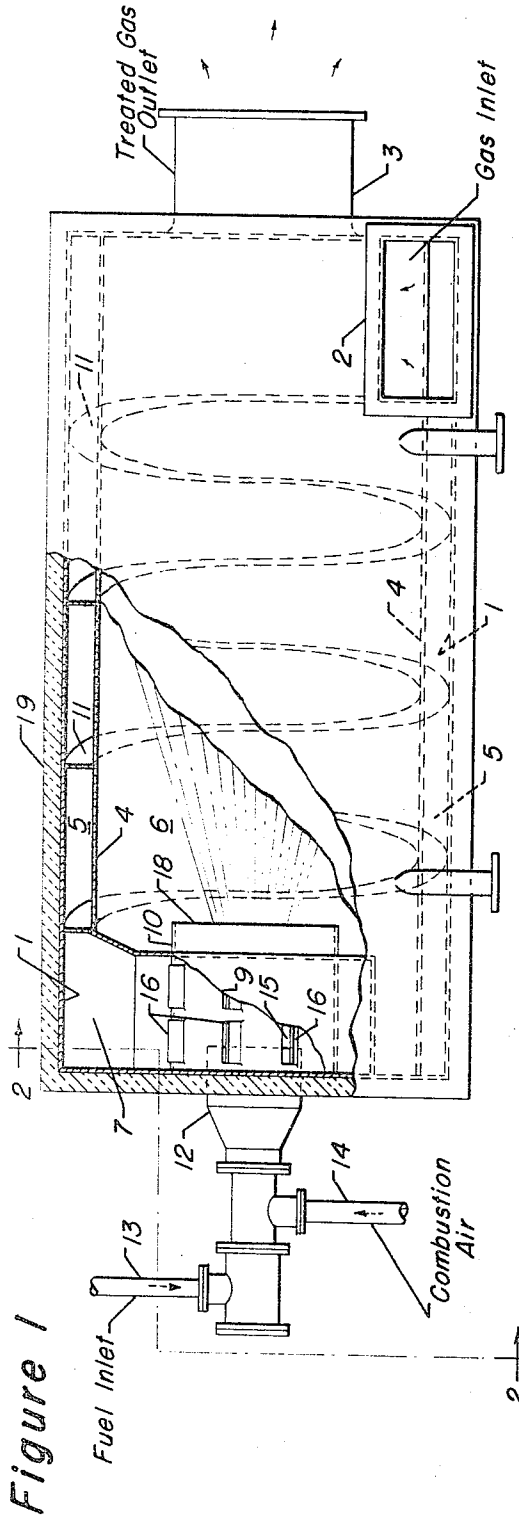


Figure 1

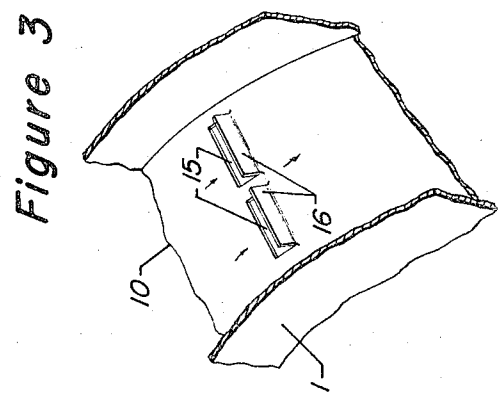

Figure 3

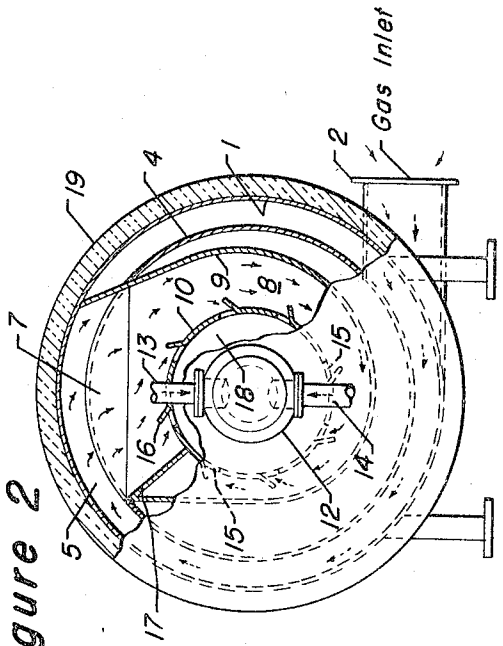


Figure 2

INVENTORS:
Walter A. Denny
William C. Verner

BY:
James R. Hoatson Jr.
Philip T. Liggett
ATTORNEYS

United States Patent Office 3,311,456
Patented Mar. 28, 1967



# 3,311,456
# APPARATUS FOR INCINERATING A WASTE GAS STREAM

Walter A. Denny, St. Clair Shores, and William C. Verner, Detroit, Mich., assignors to Universal Oil Products Company, Des Plaines, Ill., a corporation of Delaware

Filed Mar. 21, 1963, Ser. No. 266,895
5 Claims. (Cl. 23—277)

The present invention relates to an improved apparatus for incinerating a waste gas stream and more specifically to an improved direct flame incinerator which effects a spiral flow heat exchange preheating of the waste gas stream and a multiple stage spiralling discharge of such stream into an axially flowing flame pattern and resulting hot combustion gas stream.

Typical waste gas incineration installations attach one or more burners to the waste gas stack to provide for the emission of flame and hot gases directly into the waste gas stream. Alternative arrangements utilize a combustion chamber with one or more auxiliary burners directing flames into the chamber to effect the desired combustion of the obnoxious components of the stream. The effective elimination of combustibles and obnoxious fumes in a waste gas stream requires the customary three elements of combustion; in other words, time, temperature and turbulence. For complete combustion, oxygen must come into contact with the combustible molecules of the stream at a sufficient temperature and for a sufficient length of time to permit the oxidation reaction to be completed. Incomplete oxidation may result in regeneration of aldehydes, organic acids, carbon or carbon monoxide, and other undesirable components.

It is thus a principal object of the present invention to provide an improved waste gas feed arrangement whereby the stream is spirally or tangentially discharged in a multiple stage manner into a short wide flame pattern being introduced axially with respect to the discharge system.

It is also an object of the present invention to provide a spiralling heat exchange flow path around an entire inner combustion chamber to effect both the preheating of the incoming gas stream and a cooling of the external wall of the inner combustion zone.

The multiple stage or multi-point discharge of the waste gas stream into the burner flame is preferably accomplished by the use of a scroll or volute shaped gas collection-gas discharge section which will have the general configuration of an increasing area housing such as used with centrifugal fans or blowers which utilize paddle wheel or multiple blade turbine type of wheels. The present section is, however, arranged so that the enlarged area portion serves as a gas inlet to the volute, while the discharge is provided circumferentially through spaced slots around the periphery of the inner core thereof. Thus, the waste gas stream is in effect discharged tangentially at multiple points through the core and into the eye section of the volute and into the flame pattern and hot gases resulting from the burner means of the unit. The burner means, in each instance, is arranged to discharge a flame pattern axially through the eye of the volute section and at right angles to the multiple stream discharge effected by the special slotted core of the volute. The flame and hot combustion gases together with the entrained waste gases are discharged axially into an elongated confined combustion chamber such that there may be the necessary contact time for completing the incineration of the undesired or obnoxious combustible components of a waste gas stream at an autogeneous temperature level. Resulting combustion gases from the downstream end of the combustion zone may be discharged



from a combustion chamber housing into a suitable outlet duct or stack.

A preferred form of incinerating unit also provides a tangential inlet of the waste gas stream into an annular zone encompassing the outer wall of the combustion section such that there is an indirect heat exchange relationship between the incoming gas stream and the hot combustion gas outlet stream as the former passes in a thin spiral flow through the heat exchange section. Still further, suitable spiralling baffles or guide vanes may be positioned in the annular-form heat exchange section such that the incoming waste gas stream flows forward from the oxidized gas discharge end of the unit in a spiralling flow path around the combustion section to enter the inlet end of the volute shaped gas discharge section in the burner end of the unit. In some high temperature installations it may be necessary to utilize high temperature resistant alloy metals to construct the walls of the combustion section; however, generally the heat exchange flow arrangement will effect a cooling of the outer wall of the combustion chamber so as to eliminate the need for a refractory liner within the combustion zone. Suitable exterior insulation may be applied to the outer housing of the incinerator unit to maintain a desired temperature level and to prevent excessive loss of heat from the annular heat exchange section which in turn is circumscribing the inner combustion zone.

Reference to the accompanying drawing and the following description thereof will serve to describe one embodiment of the improved design and arrangement effecting the multiple stage discharge of a waste gas stream into a direct flame combustion section, as well as point out additional advantages in connection therewith.

FIGURE 1 of the drawing is an elevational view, partially in section, of a direct flame incinerating unit, utilizing a spiral inlet flow to the waste gas stream and multiple point discharge of a gas stream from a volute section into an axially flowing flame pattern.

FIGURE 2 of the drawing is an end elevational view, partially in section, as indicated by the line 2—2 in FIGURE 1 of the drawing.

FIGURE 3 of the drawing indicates diagrammatically and in an enlarged view, the arrangement of a pair of slots in the inner core or tube of the volute section providing for the tangential shave-off and discharge of a portion of the waste gas stream into the flame being emitted into the inner eye section.

Referring now to the drawing, there is indicated an elongated cylindrical form incinerator housing **1** having a gas inlet section **2** and a gas outlet section **3**. Spaced inwardly from the outer shell **1** is an inner shell **4** providing an annular heat exchange zone or space **5** which communicates with the gas inlet opening **2**. The latter preferably connects with the incinerator housing in a tangential manner, as best shown in FIGURE 2, such that all of the waste gas stream discharges into the outer annular zone 5 and passes in indirect heat exchange relationship with the hot inner wall 4 which in turn defines an inner combustion zone 6. The waste gas stream, by virtue of the tangential inlet arrangement, thus passes in a spiral flow through the annular zone 5 to the opposite end of the unit where it passes into the inlet section **7** of a scroll or volute-shaped flow path **8**. A spiralling volute member **9** together with a cylindrically shaped inner core or tube member **10** define, respectively, the outer and inner walls of a volute shaped section which serves to collect the exhaust gas stream from the preheating section **5** and then discharge it tangentially into the flame provided by burner means **12** at the end of the incineration unit. Suitable spiralling baffle or vane means **11** is shown within the thin annular-form heat exchange

zone 5 to guide the incoming waste gas stream in an elongated spiral flow path therethrough to the burner end of the unit.

The burner means 12 is indicated as being provided with fuel inlet means 13 and combustion air inlet means 14. Also, in accordance with the preferred design and arrangement the burner means is placed to discharge substantially axially into the combustion zone 6 and at right angles to the volute gas discharge path 8 such that it is substantially within the eye portion thereof. Various types of burners and burner nozzle arrangements may be utilized; however, it is generally preferable to utilize a nozzle on the burner means 12 that emits a relatively short and wide high temperature flame pattern through the eye or the core member 10 of the volute section such that the multiple stage introduction of the waste gas stream into the pattern will be at a high temperature and into a fairly wide or large diameter flame area, rather than into an elongated needle-like flame.

As best shown in FIGURES 2 and 3 of the drawing, there are provided a plurality of slots 15 spaced circumferentially around the periphery of the core member 10, as well as longitudinally across substantially the full length thereof, such that at each row of slots there will be a discharge of a fractional portion of the total waste gas stream tangentially into the flame pattern provided by burner 12. Raised lip sections 16 may be provided in conjunction with each of the open slots 15 to assist in catching and channeling a fractional portion of the gas stream into the eye of the volute section and the flame therein.

It is not intended to limit the design and construction of the present volute section to the use of any predetermined number of slots or to any one pattern of spacing; however, there shall be provided an adequate number of slots with sufficient open area to suitably accommodate the discharge of the entire waste gas stream into the eye of the volute section. A suitable end closure member 17, as shown in FIGURE 2, is provided at the end of the volute path 8 so as to insure that all of the waste gas stream passes through the circumferentially spaced slots 15. Also, other shapes or forms of slots and other forms of lip members or guide-vanes may be utilized in conjunction with the slots to assist in the tangential shave-off of the gas stream into the internal flame pattern. As the waste gas stream enters into the flame from burner means 12 there is a direct longitudinal flow of the resulting mixture through opening 18 into the elongated combustion section 6 such that there is adequate time to insure the complete oxidation of all the combustible and obnoxious components entrained with the waste gas stream. At the downstream end of the unit the resulting gas products are discharged through the outlet opening 3 which may in turn connect with duct work or a stack not shown in the drawing. Insulation means 19 is shown encompassing the entire housing 1 to conserve heat within the heat exchange section and within the ends of the combustion zone.

The scroll or volute shaped section may vary in size to accommodate a particular quantity of waste gas stream, but in all instances shall provide a decreasing cross-section area flow path for the stream being introduced to the flame and combustion chamber. In an alternative form of construction, there may be used more than one volute gas collection-gas distributing section to accommodate a large quantity of waste gas product. Each volute section shall then receive a portion of the introduced gas stream and each spaced volute section in turn will have an axially positioned burner means projecting into the eye section thereof such that the waste gas stream in each instance will be tangentially introduced in a multiple point manner into each of the flame patterns for thermal oxidation and incineration of the combustible components in the stream. It may also be pointed out that a direct flame incineration unit of the present improved design is particularly adaptable for use as a carbon monoxide burning unit. For high carbon monoxide content flue gas streams, it is quite customary to employ carbon monoxide burning units to effect more complete combustion of the carbon monoxide content to carbon dioxide and to recover the heat production from such units by the use of one or more pipe coils or tube banks in connection therewith. The tube banks may be placed in conventional ways within the housing of the unit and/or within the gas passageway means carrying the resulting flue gas stream to an outlet stack, and it is not believed necessary to illustrate steam coils or other heat exchange tube banks in combination with an incineration unit or carbon monoxide burning unit utilizing the present improved design features.



We claim as our invention:

1. A direct flame incinerating apparatus for effecting the thermal combustion of oxidizable components in a waste gas stream, which comprises in combination, an elongated combustion chamber having a flame and gas inlet means and a combustion gas outlet, an outer housing spaced from said combustion section and defining an annular-form heat exchange section, a waste gas inlet connecting with said housing and discharging into said heat exchange section, at least one volute shaped gas collecting-gas distributing section positioned at one end of said combustion chamber and having an inlet section thereto connective with said annular-form heat exchange section, and such volute-shaped section having an open central core that is in open communication with the interior of said combustion chamber, burner means projecting through the end of said housing into said open central core of said volute shaped section, fuel and air supply means connecting to said burner means, a plurality of slot-like openings spaced circumferentially around said central core of said volute shaped section whereby the waste gas stream flowing centrifugally therethough passes into the flame and hot gases from said burner means as a plurality of smaller tangential streams.

2. The apparatus of claim 1 further characterized in that said waste gas inlet means is connected tangentially to said housing and to said annular-form heat exchange section and spiral baffle means is positioned within said annular-form heat exchange section, whereby the incoming waste gas stream passes in a spiral path around the inner combustion chamber and in indirect heat exchange relationship therewith prior to entering the volute section and the interior of said combustion chamber.

3. The apparatus of claim 1 further characterized in that said slot-like openings are spaced circumferentially around and also longitudinally across said central core.

4. The apparatus of claim 1 further characterized in that, along the downstream edge of each of said slot-like openings, a raised lip member is attached to and extends outwardly from said central core a short distance into said volute-shaped section.

5. The apparatus of claim 1 further characterized in that said outer housing is encompassed by insulation means.

**References Cited by the Examiner**

UNITED STATES PATENTS

3,090,675 5/1963 Ruff et al. ---------- 23—2 X

OSCAR R. VERTIZ, *Primary Examiner.*

EARL C. THOMAS, *Examiner.*