(No Model.)

H. E. STAGER.

STEAM RADIATOR ATTACHMENT.

No. 456,346. Patented July 21, 1891.

Fig. 1.

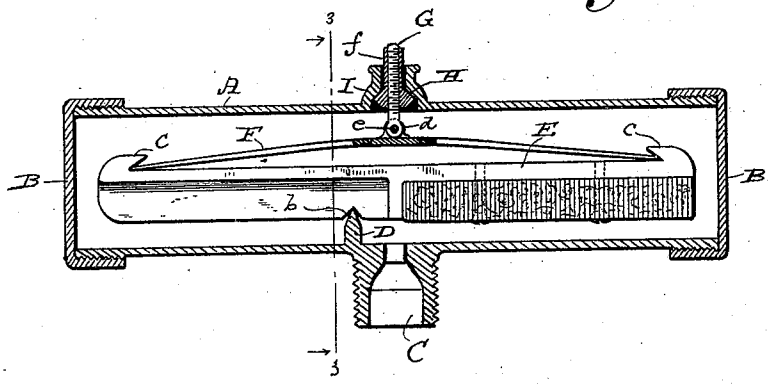

Fig. 2.

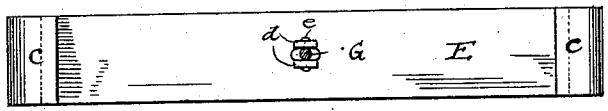

Fig. 3.

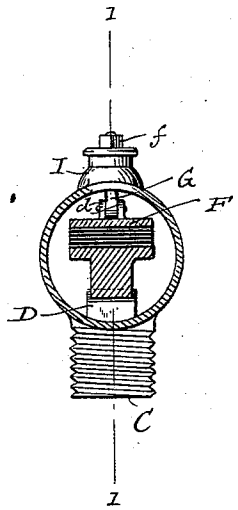

Witnesses
Geo. W. Young
Wm Klug

Inventor
Henry E. Stager
By H. G. Underwood
Attorneys

THE NORRIS PETERS CO., PHOTO-LITHO., WASHINGTON, D. C.

UNITED STATES PATENT OFFICE.

HENRY E. STAGER, OF MILWAUKEE, WISCONSIN, ASSIGNOR OF ONE-HALF TO JAMES E. WOODWORTH, OF SAME PLACE.

STEAM-RADIATOR ATTACHMENT.

SPECIFICATION forming part of Letters Patent No. 456,346, dated July 21, 1891.

Application filed October 24, 1890. Serial No. 369,177. (No model.)

To all whom it may concern:

Be it known that I, HENRY E. STAGER, a citizen of the United States, and a resident of Milwaukee, in the county of Milwaukee, and in the State of Wisconsin, have invented certain new and useful Improvements in Steam-Radiator Attachments; and I do hereby declare that the following is a full, clear, and exact description thereof.

My present invention relates particularly to that class of steam-radiator attachments set forth in Patent No. 436,159, issued September 9, 1890, to myself, assignor of one-half to James E. Woodworth; and it consists in certain peculiarities of construction and combination of parts, to be hereinafter described with reference to the accompanying drawings, and subsequently claimed.

In the drawings, Figure 1 represents a vertical longitudinal section of my device, the section being taken on line 1 1 of Fig. 3; Fig. 2, a plan view of certain of the parts belonging to said device; and Fig. 3, a transverse section on line 3 3 of Fig. 1.

Referring by letter to the drawings, A represents a shell, preferably of cylindrical form and closed at its ends with caps B, screw-threaded thereto.

The bottom of the shell is provided with a hollow branch C, screw-threaded upon its exterior for engagement with an ordinary coupling, (not shown,) whereby the device constituting my invention may be fitted to a steam-radiator, although it is possible to so shape said branch as to dispense with the auxiliary coupling.

Upon its inner side the bottom of the shell A is provided with a knife-edge bearing D, that engages a notch *b* in the under side of a beam E, the latter being preferably of cast-iron and having its ends in the form of lips *c*, that come over upon the ends of a strip F of brass or other suitable material capable of expanding quickly under the influence of heat. The expansible strip is sprung up toward the center and provided at this point with ears *d*, to which a screw-threaded rod G is pivotally connected by means of a transverse pin *e*, and adjustable on this rod is a valve H for a hollow branch I, that extends from the top of the shell A above described, the stem *f* of the valve being preferably squared to facilitate the adjustment on said rod by means of a wrench.

In order that the rod may move freely on its pivot, and thereby prevent binding of the valve-stem *f* in the shell branch I, the bore of the latter is of such dimensions as to permit of said rod having a certain amount of movement on each side of its normal center.

That portion of the beam E that is provided with the notch *b* for engagement with the pivot or knife-edge bearing D is of such dimensions as to form a counter-weight for a float J, preferably soapstone or other suitable material, in solid form, secured to the remaining portion of said beam by screws *g*, or such other means as may be found convenient or desirable. By removing either of the caps B from the shell A the working parts of my device may be readily withdrawn in case repairs are necessary.

The device above described being connected to a radiator, the beam E is normally in equipoise and the valve H adjusted on the rod G to such position as to automatically seat itself when the strip F expands, whereby the escape of steam through the air-opening or hollow branch I of the shell A is prevented. The radiator being cold there is no expansion of the strip F, and consequently the valve H is off its seat. Therefore, if said radiator be flooded, the rise of water in the shell A against the float J will tilt the beam E on its bearing D, to thereby seat said valve and prevent the escape of any of the water into the apartment in which the aforesaid radiator may be located.

I am aware that a strip of expansible material has been heretofore employed in connection with a valve for the air-escape of a steam-radiator, and I make no claim to the same except in combination with a counter-balanced float-controlled beam, to which the expansible strip may be connected, the main object of my invention being to prevent the escape of water rather than steam from said radiator, although the construction above described enables me to secure both results by a very simple mechanism.

Having thus described my invention, what I claim as new, and desire to secure by Letters Patent, is—

1. An attachment for steam-radiators, that comprises a shell having an air-escape opening, a counterbalanced float controlled beam fulcrumed in the shell, a strip of expansible material secured at its ends to the beam, and a rod-valve connected to the expansible strip in opposition to said air-escape opening, substantially as set forth.

2. An attachment for steam-radiators, that comprises a shell having an air-escape opening, a knife-edge bearing on the inner side of the shell-bottom, a counterbalanced float-controlled beam supported on said bearing, a strip of expansible material secured at its ends to the beam, and a rod-valve connected to the expansible strip in opposition to said air-escape opening, substantially as set forth.

In testimony that I claim the foregoing I have hereunto set my hand, at Milwaukee, in the county of Milwaukee and State of Wisconsin, in the presence of two witnesses.

H. E. STAGER.

Witnesses:
N. E. OLIPHANT,
WM. KLUG.