Feb. 2, 1965 J. P. GEBHART 3,168,635

ASSEMBLY OF ELEMENTS FOR MAKING INTERMITTENT ELECTRICAL CONTACT

Filed Dec. 31, 1962

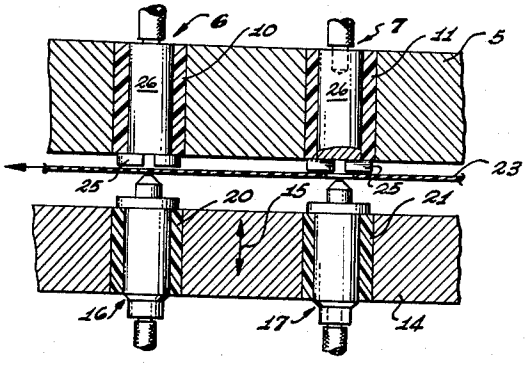

Fig. 1

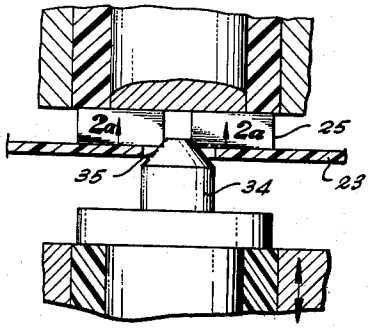

Fig. 2

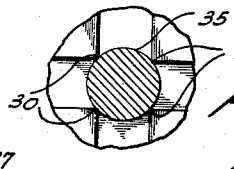

Fig. 2a

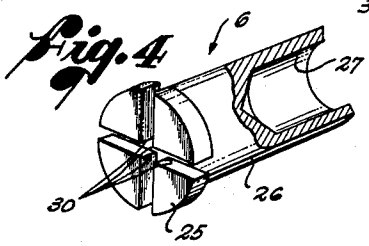

Fig. 4

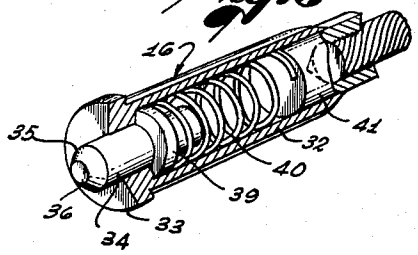

Fig. 3

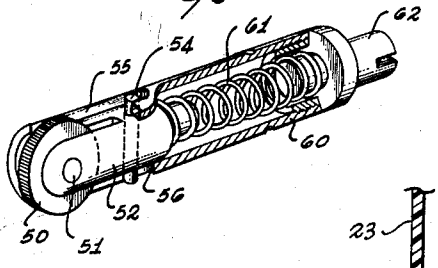

Fig. 5

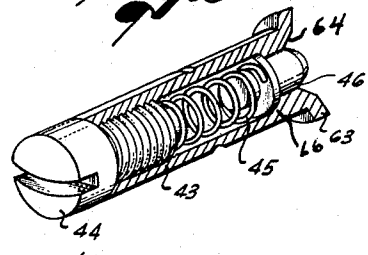

Fig. 6

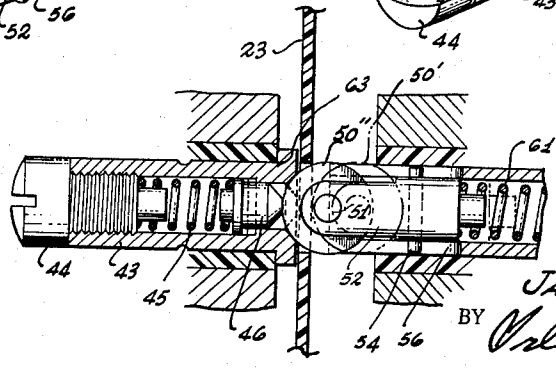

Fig. 7

INVENTOR.
JACK P. GEBHART
BY Orl R. Hodges
ATTORNEY

United States Patent Office 3,168,635 Patented Feb. 2, 1965

3,168,635

ASSEMBLY OF ELEMENTS FOR MAKING INTERMITTENT ELECTRICAL CONTACT

Jack P. Gebhart, Long Beach, Calif., assignor to Chalco Engineering Corporation, Gardena, Calif., a corporation of California

Filed Dec. 31, 1962, Ser. No. 248,791
7 Claims. (Cl. 200—166)

This invention relates to electrical contacts and particularly to intermittent electrical contact elements which provide substantially one hundred percent reliability.

In U.S. patent application, Serial No. 57,832, filed September 22, 1960, entitled "Tape Program Apparatus," now Patent No. 3,071,317, issued January 1, 1963, and assigned to the same assignee as the present application, a readout system is disclosed and claimed. This system utilizes two groups of a plurality of electrical contacts, one group of which is movable simultaneously toward the other group, contact being made between opposite elements only when a perforation appears in a film or tape positioned therebetween. Although the contact elements shown in the patented system have good reliability, greater reliability is desired, especially when many electrical contacts are involved in the testing of complicated systems and complex circuitry.

The present invention, therefore, is directed to an electrical contact arrangement which may be used in the apparatus shown in the above-mentioned patent with substantially one hundred percent reliability. This reliability is provided by using a plurality of knife edges arranged in a circle which are adapted to be contacted by the sloping sides of a movable tapered element.

Reliability is obtainable even though there is a certain amount of eccentricity between the axis of the tapered element and the axis of the knife edges. Furthermore, the use of knife edges provides the minimum of area exposable to dirt and dust, and even though dirt and dust may collect on the tapered surfaces, the knife edges can readily penetrate through the dirt and dust to insure a good contact.

A combination of contact elements for use with continuously moving perforated film or tape and having a high degree of reliability is also described hereinafter.

The principal object of the invention, therefore, is to provide the optimum of reliability in the making of intermittent electrical contacts.

Another object of the invention is to provide an improved contact construction between two electrical conducting elements.

A further object of the invention is to provide an improved rolling electrical contact construction.

A still further object of the invention is to provide an improved intermittent electrical contact construction which provides substantially one hundred percent reliability.

A better understanding of this invention may be had from the following detailed description when read in conjunction with the accompanying drawings, in which:

FIG. 1 is a side view, partly in cross-section, of a pair of electrical contact elements embodying the invention;

FIG. 2 is an enlarged cross-sectional view showing two contact elements in contact;

FIG. 2*a* is a cross-sectional view taken along the line 2*a*—2*a* of FIG. 2;

FIG. 3 is a perspective view, partly in cross-section, showing the movable contact element;

FIG. 4 is a perspective view, partly in cross-section, showing the fixed contact element;

FIG. 5 is a perspective view, partly in cross-section, showing a rolling contact element for continuously moving tape or film;

FIG. 6 is a perspective view, partly in cross-section, of the contactor for the element shown in FIG. 5; and

FIG. 7 is a cross-sectional view taken with the rolling contact shown in FIG. 5 and the contactor of FIG. 6 in engagement.

Referring, now, to the drawings in which the same numerals identify the same elements, a fixed block **5** mounts one or more contact elements shown generally at **6** and **7**. The contact elements **6** and **7** may be insulated from the block **5** as shown by insulations **10** and **11**, or the block **5** may be of insulated material. A large number of these elements can be mounted as described in the above-mentioned patent.

A mounting block **14** adapted to be oscillated in the direction of the arrow **15** mounts a pair of contact elements shown generally at **16** and **17**, movement of the block **14** bringing the contact elements **16** and **17** in contact with the fixed contact elements **6** and **7**. The elements **16** and **17** may be insulated from the block **14** by insulations **20** and **21**, or the block may be of insulating material.

Shown passing between the contact elements **6–7** and **16–17** is a film or tape **23** which has been perforated in a prearranged order to permit certain of opposing contact elements to contact each other when a perforation appears between them. If no perforation is present, then the tips of the contacts **16** and **17** rest against the film or tape and no contact is made.

The details of the fixed contact elements are shown in FIGS. 2, 2*a*, and 4, the fixed contactors such as **6** and **7** having a cross-notched plate **25** attached to a cylindrical body section **26**, having an end cavity **27** in which the end of an electrical conductor may be soldered. By cross-notching plate **25**, four centrally arranged parallel knife edges **30** are provided, a practical plate having a thickness of $^{25}/_{1000}$ of an inch, a notch width of $^{20}/_{1000}$ of an inch, while the diameter of the body **26** is $^{78}/_{1000}$ of an inch.

Each of the movable contact elements such as shown at **16** and **17** and in detail in FIG. 3 has a hollow cylindrical body **32** of $^{78}/_{1000}$ of an inch diameter. Near the end of the body is a flange **33** of a thickness of $^{25}/_{1000}$ of an inch and through which passes a cylindrical element **34** having a tapered conical tip surface **35** and a flat tip surface **36**. The inner section of the cylinder **34** has a flange **39**, while the end of the cylinder has mounted thereon a compression spring **40**, the other end of the spring **40** abutting an electrical connecting element **41**. Thus, the cylinder **34** is biased outwardly by the spring **40**. The dimensions of a typical contact element such as shown in FIG. 3 are those in which the cylinder **34** is $^{50}/_{1000}$ of an inch in diameter, the diameter of the surface of the tip **36** is $^{10}/_{1000}$ of an inch, while the angle of the tapered surface **35** with respect to the surface of the cylinder **34** is 45 degrees.

As shown in FIGS. 2 and 2*a*, when a perforation appears in the tape **23**, the tapered surface **35** is brought into contact with one or more of the knife edges **30** of the plate **25** when the block **14** is moved toward the block **5**. As shown in FIG. 2*a*, the axis of the tapered portion **35** is concentric with the circle of the knife edges **30**. However, if a certain eccentricity should exist, the surface **35** may only contact one or two of the knife edges but this contact is sufficient to provide the desired electrical connection. Since the cylinder **34** is under the compression of the spring **40**, no damage is done to the contacting surface if some eccentricity exists.

As mentioned above, since the knife edges have practically no appreciable surface on which dust or dirt can collect, and if any dust or dirt should exist on the tapered surface **35**, it will be easily pierced by the sharp knife edges **30**.

In FIG. 5, the construction of one element of a rolling type of contact system for continuouly moving film or tape is shown. This element includes a roller **50** mounted on a shaft **51** in a yoke **52** which has a pin **54** therethrough, the ends of the pin being in slots **55** and **56** in a cylindrical body **60**. The roller **60** is under tension of a spring **61** having one end against the yoke **52** and the other end against an electrical connecting element **62** fastened to the body **60**. Thus, the roller **50** may roll along on the film until a perforation is reached, at which time the contact roller **50** may connect the special contacting element shown in FIGS. 6 and 7. The element shown in FIGS. 6 and 7 has a cylindrical body **43** and an electrical connecting element **44** which is threaded to the body **43** in order to vary the tension of a spring **45**, one end of which abuts the contact element **46**. The end of body **43** has a flange **63**, the central opening for the element **46** being chamfered as shown at **64**. The normal position of the tapered end of element **46** is such that its tip surface is in the outer plane of flange **63**, a flange **66** on element **46** abutting a shoulder of body **43** to hold the element **46** in position. Now, the spring **61** of the roller element shown in FIG. 5 is stronger than the spring **45** of the element shown in FIG. 6 so that when the roller **50** encounters a perforation, it first makes contact with the flat tip of element **46** and then depresses element **46** to make contact with the chamfered surface **64**, as shown at **50''**. This action provides double insurance of a good contact being made.

I claim:

1. An electrical contact assembly comprising a fixed element and a movable element adapted to be intermittently brought into contact with said fixed element, one of said elements having at least one knife edge contacting surface and the other of said elements having a tapered surface for contacting said knife edge surface, said fixed element being a plate having cross notches therein to form a plurality of parallel knife edge surfaces concentrically positioned.

2. An electrical contact assembly comprising a fixed element and a movable element adapted to be intermittently brought into contact with said fixed element, one of said elements having at least one knife edge contacting surface and the other of said elements having a tapered surface for contacting said knife edge surface, said movable element being a cylinder having a tapered conical surface at the end thereof, the axis of said cylinder being substantially concentric with the axis of said concentrically positioned knife edge surfaces.

3. A pair of electrical contact elements adapted to make contact intermittently comprising one fixed element and one movable element, one of said elements having a contactor plate with crossed notches over the surface thereof to provide a plurality of parallel knife edge surfaces and the other of said elements having a tapered conical surface with respect to the surface of said first-mentioned element, said tapered surface and said knife edge surfaces being brought into contact upon movement of said movable element.

4. A pair of electrical contact elements in accordance with claim 3 in which means are provided for resiliently biasing one of said contact elements toward the other of said contact elements.

5. A pair of electrical contact elements in accordance with claim 3 in which said movable contact element includes a hollow cylindrical body and a cylinder passing through one end of said body, the end of said cylinder having its outer surface tapering toward the axis of said cylinder.

6. A pair of electrical contact elements in accordance with claim 5 in which said cylinder is resiliently biased toward said fixed element.

7. A pair of electrical contact elements in accordance with claim 6 in which said parallel knife edge surfaces are concentrically positioned.

References Cited by the Examiner

UNITED STATES PATENTS

2,339,996	1/44	Kight	200—19
2,753,432	7/56	Long et al.	200—166
2,931,874	4/60	Leaman	200—61.08 X
2,934,628	4/60	Massar et al.	200—117 X
3,002,061	9/61	Perkins	200—46
3,032,620	5/62	Siiberg	200—166
3,047,682	7/62	Hults	200—166

BERNARD A. GILHEANY, *Primary Examiner.*