G. R. WADSWORTH.

COMBINED ENGINE STARTER, DYNAMO, AND IGNITION TIMER FOR AUTOMOBILES.

APPLICATION FILED JAN. 5, 1914.

1,158,597.

Patented Nov. 2, 1915.

3 SHEETS—SHEET 1.

FIG. 1.

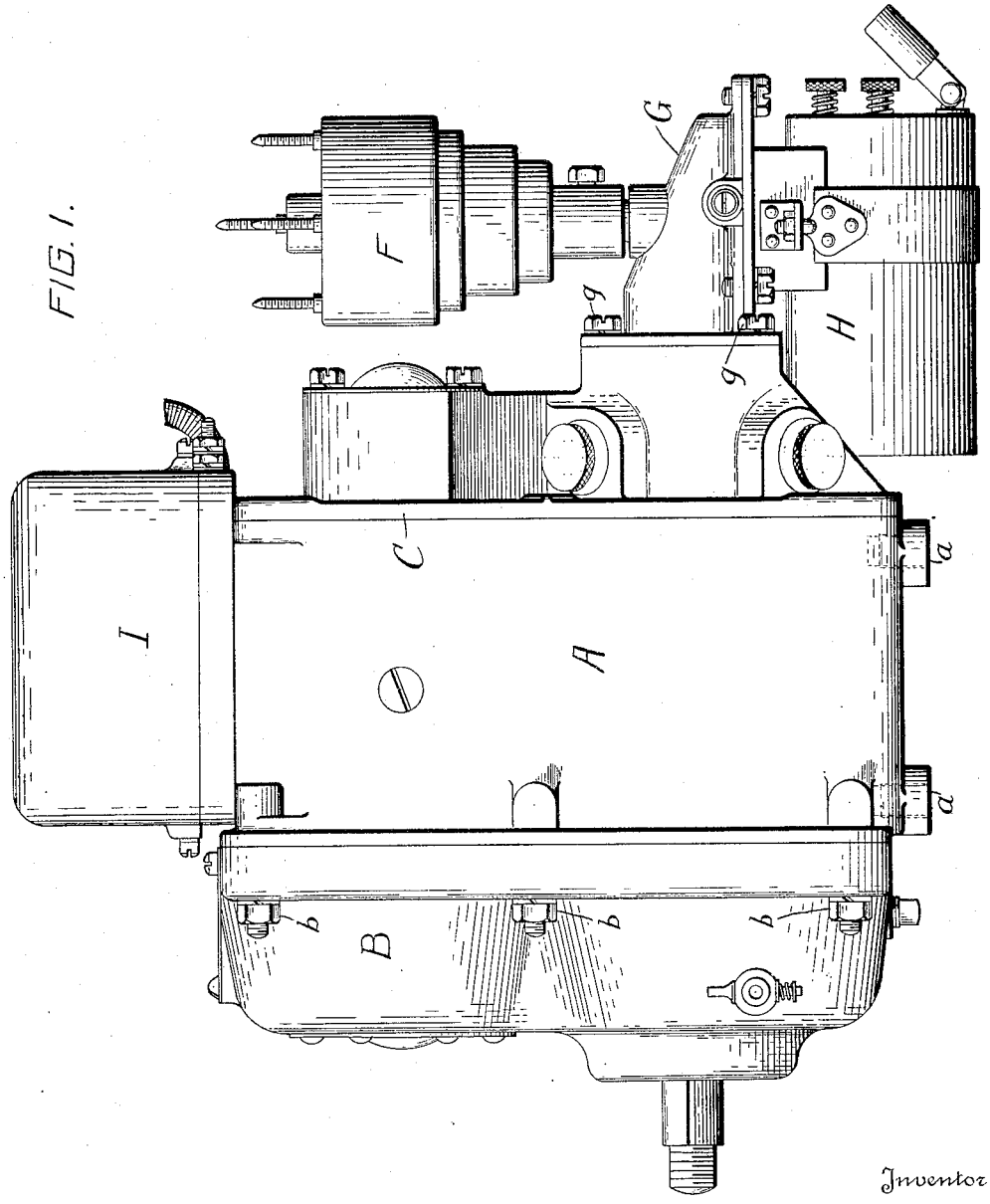

Inventor

George R. Wadsworth,

By H. E. Stebbins,

Attorney

Witnesses

W. F. Kayle.

G. L. Gersdorff.

COLUMBIA PLANOGRAPH CO., WASHINGTON, D. C.

G. R. WADSWORTH.

COMBINED ENGINE STARTER, DYNAMO, AND IGNITION TIMER FOR AUTOMOBILES.

APPLICATION FILED JAN. 5, 1914.

1,158,597.

Patented Nov. 2, 1915.

3 SHEETS—SHEET 2.

FIG. 2.

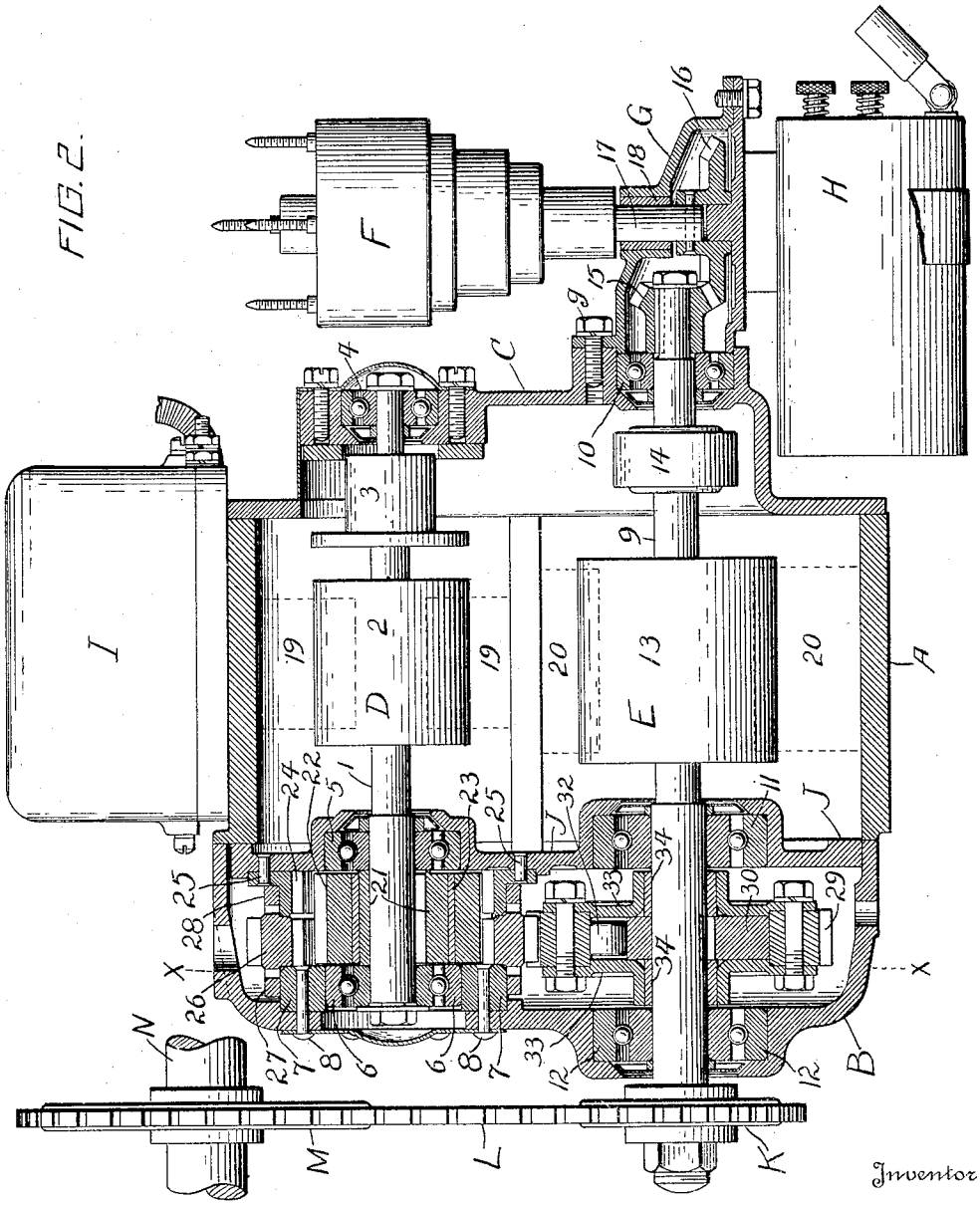

Inventor

Witnesses:
Wm. F. Hoyle.
A. L. Gersdorff.

George R. Wadsworth
By F. E. Stebbins
Attorney

COLUMBIA PLANOGRAPH CO., WASHINGTON, D. C.

G. R. WADSWORTH.

COMBINED ENGINE STARTER, DYNAMO, AND IGNITION TIMER FOR AUTOMOBILES.

APPLICATION FILED JAN. 5, 1914.

1,158,597.

Patented Nov. 2, 1915.

3 SHEETS—SHEET 3.

FIG. 3.

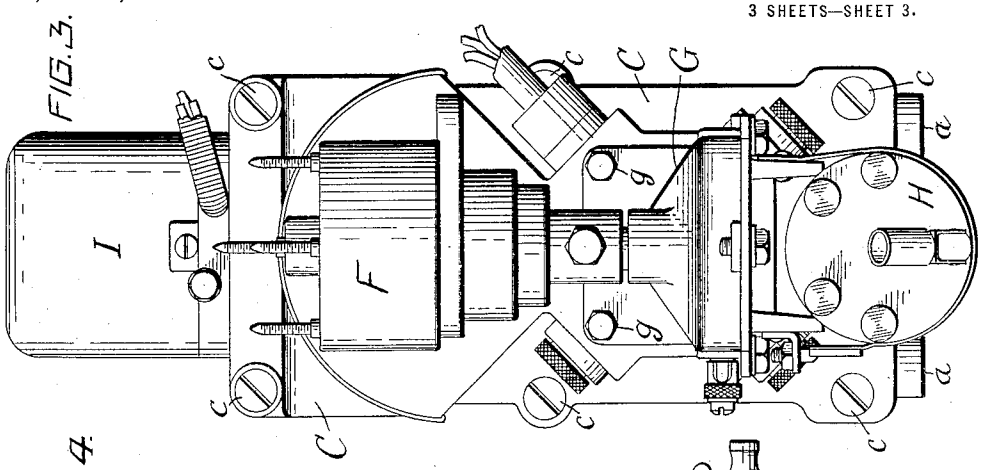

FIG. 4.

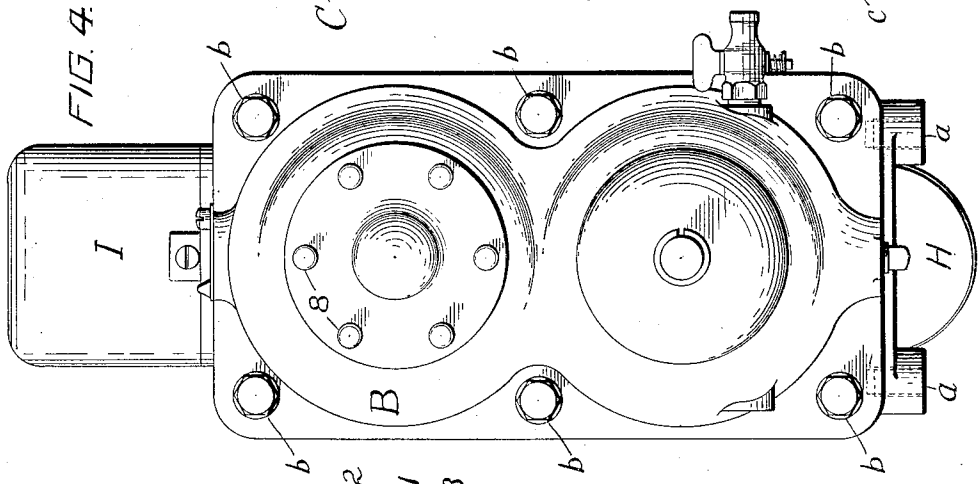

FIG. 5.

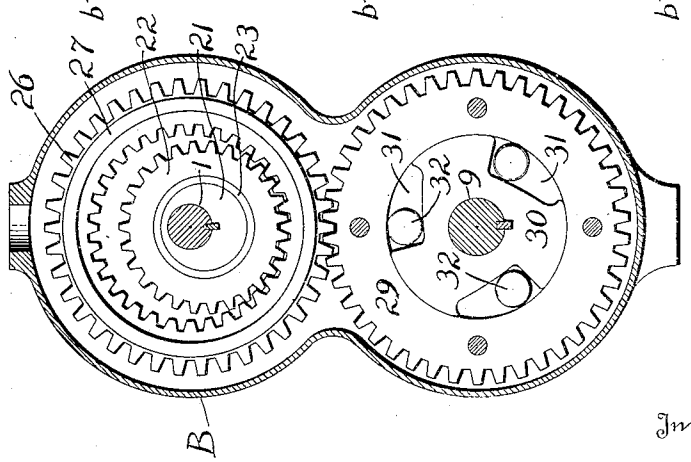

Inventor

George R. Wadsworth,

By F. E. Stebbins, Attorney

Witnesses

Wm. F. Kayle.

A. L. Gersdorff.

COLUMBIA PLANOGRAPH CO., WASHINGTON, D. C.

UNITED STATES PATENT OFFICE.

GEORGE REED WADSWORTH, OF BOSTON, MASSACHUSETTS, ASSIGNOR TO GRAY & DAVIS, INC., OF BOSTON, MASSACHUSETTS, A CORPORATION OF MASSACHUSETTS.

COMBINED ENGINE-STARTER, DYNAMO, AND IGNITION-TIMER FOR AUTOMOBILES.

1,158,597. Specification of Letters Patent. Patented Nov. 2, 1915.

Application filed January 5, 1914. Serial No. 810,335.

To all whom it may concern:

Be it known that I, GEORGE R. WADSWORTH, a citizen of the United States, residing at Boston, in the county of Suffolk and State of Massachusetts, have invented a certain new and useful Combined Engine-Starter, Dynamo, and Ignition-Timer for Automobiles, of which the following is a specification.

Heretofore the dynamo for charging a battery and lighting an automobile, the electric motor for starting the internal combustion engine, and the ignition timer, have been located in different positions as was deemed most convenient and each independently operated.

The main object of my invention is to combine the said three units compactly together and inclose the operating mechanism within a casing or housing so as to exclude dust and dirt and also as far as possible to reduce the number of parts and simplify the construction.

A further object is to combine the said three units so that the electric motor for starting the internal combustion engine shall transmit motion to the engine shaft by way of the interposed dynamo and through the medium of speed reduction gearing, and simultaneously actuate the ignition timer by motion transmitted to the same by the dynamo shaft in gear therewith, the arrangement to be such that when the motor and speed reduction gearing is stopped the engine shall actuate the dynamo to generate current for charging a battery and also to operate the ignition timer.

With the above objects in view, the invention consists in certain novelties of construction and combinations and relative arrangements of parts substantially as shown and herein set forth and claimed.

The accompanying drawings illustrate the embodiment of the invention by the best mode of procedure I have so far devised for the purpose.

Figure 1 is a side view in elevation of the combined unitary device, the motor and dynamo and gearing for operating the ignition timer being inclosed by the housing. Fig. 2 is a longitudinal vertical section in elevation of Fig. 1, also showing the transmission gearing connecting the dynamo and internal combustion engine shafts. Fig. 3 is a rear end elevation view of Fig. 1. Fig. 4 is a front end elevation view of Fig. 1. Fig. 5 is a vertical sectional elevation view on line x—x of Fig. 2.

The main parts of the combined device are: a metallic casing or housing comprised of a body A having perforated bearings a to receive means for securing the casing to a support, front cover head B detachably secured to the body by bolts and nuts b, and a rear cover head C detachably secured to the body by threaded studs c; an electric motor D for transmitting motion to a dynamo electric machine E through a speed reducing or sun and planet gear; and an ignition timer F actuated by a bevel gear connection with the dynamo shaft, which gear is within a housing G secured to the rear cover head by threaded studs g. An ignition coil H is shown supported from the housing G and a regulator cut-out I mounted on the casing. The motor and dynamo shafts are supported parallel to each other within the housing on ball bearings located in the rear cover head and between the front cover head and a vertical head plate J suitably supported.

The numeral 1 designates the motor shaft carrying the armature 2 and commutator 3 as usual; 4, the rear ball bearing cage; 5, the ball bearing cage in the plate J; 6, the ball bearing cage pressed into the ring block 7 which is secured by rivets 8 to the cover head; 9, the dynamo shaft; 10, the rear ball bearing cage; 11, the ball bearing cage in the plate J; 12, the ball bearing cage in the front cover head; and 13, 14, the armature and commutator. The shaft 9 projects through the front cover head and keyed to it is a sprocket wheel K connected by a sprocket chain L with a sprocket wheel M on the shaft N of an internal combustion engine which propels the vehicle. The opposite end of shaft 9 extends through the cage 10 and carries a beveled gear wheel 15 which is in mesh with a beveled gear wheel 16 secured to the rotary shaft 17 of the ignition timer F, said shaft being supported in a bearing 18 in the housing. The fields 19 and 20 of the motor and dynamo, indicated by dotted lines, are supported by the body A of the casing.

Between the vertical head plate J and the front cover head B are located the speed reduction gear and the overrunning roller clutch. The parts comprising the reduction

gear are a cam 21 keyed on the motor shaft, a spur gear 22 having twenty-seven teeth, a bronze bushing 23, an annular gear or toothed rack 24 half the width of spur gear 22 and having thirty-one teeth secured to the head plate J by rivets 25 passed through the flange and plate, and a spur gear 26 having thirty-two interior teeth and thirty-eight exterior teeth, said spur gear being half the width of spur gear 22 and provided with edge bearing flanges 27, 28 which frictionally engage, respectively, the exterior surface of the ring block 7 and the exterior surface of the annular fixed gear or rack 24, the said combined parts constituting a species of sun and planet gear.

The parts comprising the overrunning roller clutch are: the spur gear 29 having forty-two teeth meshing with the thirty-eight teeth of the spur gear 26, center piece 30 keyed on shaft 9 and provided with tapering recesses 31 in its edge within which are rollers 32 adapted to be engaged by the inner ground annular surface of the spur gear 29 so as to wedge the said spur gear and center piece together when the spur gear moves in one direction only relative to the center piece, flanged side plates 33, 33 supporting the spur gear 29, and bushings 34, 34 pressed under the flanges of the plates and within which the shaft 9 freely rotates.

The mode of operation is as follows: The internal combustion engine shaft being at rest, it can be started by applying an electric current to the starting motor (by connecting it with the battery not shown). Armature shaft 1 rotates, carrying with it the cam 21 which rolls spur gear 22 around rack gear 24 and spur gear 26, with both of which it is in mesh, and at the same time imparting rotatory motion to spur gear 26, the exterior teeth of which gear are in mesh with the teeth of spur gear 29 concentric with the dynamo shaft. The rotation of gear 29 moves the rollers 32 toward the narrower parts of the recesses 31 and cause gear 29 to interlock with center piece 30 and to impart rotary motion to the dynamo shaft 9, which in turn, through the medium of the sprocket wheels and sprocket chain connecting the end of the shaft with the crank shaft N of the internal combustion engine, imparts rotary motion to the latter. Simultaneously the shaft 9, through the medium of the bevel gear wheels 15 and 16, imparts a rotatory motion to the shaft 17 of the ignition timer. Obviously, the ratio of the speed of the timer shaft to the speed of the internal combustion engine shaft is readily determined and secured through the relative sizes of the beveled gear wheels 15 and 16 on the shaft 9 and on the timer shaft. When the internal combustion engine shaft has been started the current to the motor is shut off and the motor and train of gearing between the motor and dynamo cease to move, except the center piece 30 on the dynamo shaft 9 and the rollers 32, which are carried around with the dynamo shaft, the rollers being in the wider portions of the recesses 31 where they do not frictionally grip the inner surface of the spur gear 29. The dynamo shaft continues to be driven by the engine shaft and operates the timer and by suitable conductors (not shown) charges the battery.

It will be observed that by the particular mechanism shown the speed reduction is obtained in a ratio of 32 to 1 by the sun and planet gear, and also through spur gear 26 having the thirty-eight teeth meshing with the forty-two teeth of spur gear 29. Obviously, and in well known ways, the number of gear teeth of the sun and planet gear may be varied to obtain different speed reductions, and, if desired, so as to rotate spur gear 29 in the opposite direction, especially when the entire mechanism is differently located relative to the engine. Further, the connection of the dynamo shaft with the engine shaft may be by other means than sprocket wheels and a sprocket chain. Such and other changes may be made without constituting substantial departures. Finally, the internal combustion engine with which the three units are combined may be used for any purpose desired other than the propulsion of an automobile.

What I claim is:

1. The combination of an electric motor, a dynamo electric machine, a shaft operated by an engine, gearing connecting the dynamo shaft with the shaft operated by the engine, and sun and planet speed reduction gearing between the electric motor and the dynamo shaft; whereby rotary motion may be transmitted from the motor to the shaft operated by the engine through the medium of the dynamo shaft.

2. The combination of an electric motor, a dynamo electric machine, an engine shaft, an ignition timer, gearing connecting the dynamo shaft with the engine shaft, speed reduction gearing between the electric motor and the dynamo shaft, and means for operating the ignition timer by the dynamo shaft; the arrangement being such that rotary motion may be transmitted from the motor to the engine shaft through the medium of the dynamo shaft.

3. The combination of an electric motor, a dynamo, a shaft operated by an engine, sun and planet gearing including a fixed tooth rack connecting the dynamo shaft with the shaft operated by the engine, speed reduction gearing between the electric motor and the dynamo shaft, and overrunning clutch mechanism in connection with the dynamo shaft, whereby the shaft operated

by the engine can transmit rotary motion to the dynamo shaft when the motor and speed reduction gearing are at rest.

4. The combination of an electric motor, a dynamo, a shaft operated by an engine, gearing connecting the dynamo shaft with the shaft operated by the engine, speed reduction gearing between the electric motor and the dynamo shaft, an ignition timer, gearing connecting the dynamo shaft and the ignition timer, and overrunning clutch mechanism in connection with the dynamo shaft, whereby the shaft operated by the engine can transmit motion to the dynamo shaft and the ignition timer when the motor is at rest.

5. The combination of a dynamo, a shaft operated by an engine, an ignition timer, gearing connecting the dynamo shaft with the shaft operated by the engine, gearing connecting the dynamo shaft with the ignition timer, an electric starting motor, and gearing connecting the electric motor with the dynamo for starting the engine mediately through the dynamo.

6. The combination of an electric motor, a cam fixed on the motor shaft, a spur gear loosely mounted on the cam, a fixed annular gear 24, an annular gear with interior and exterior teeth suitably supported, a dynamo shaft, a spur gear concentric with said shaft and suitably supported, and clutch means carried by the said dynamo shaft and adapted to engage the spur gear; the spur gear on the cam being in mesh with the fixed gear 24 and the interior teeth of the annular spur gear, and the exterior teeth of said annular spur gear being in mesh with the spur gear concentric with the dynamo shaft.

7. The combination of a housing comprising a main body part, a detachable front cover head supporting bearings for a motor shaft and a dynamo shaft, and a rear cover head supporting bearings; a head plate within the housing parallel with a cover head and supporting bearings, a motor shaft and a dynamo shaft supported each parallel to the other by the said bearings, and sun and planet speed reduction gearing located between a cover head and the head plate within the housing and actuated by the motor shaft to transmit motion to the dynamo shaft.

8. The combination of a starting motor, a dynamo, speed reduction gearing between the motor and dynamo, an engine shaft, gearing connecting the engine shaft and dynamo shaft, an ignition timer, means connecting the dynamo shaft with the ignition timer, and means connecting the dynamo shaft and speed reduction gearing allowing the dynamo shaft to rotate freely in one direction independent of the speed reduction gearing.

9. The combination of an electric motor, a dynamo electric machine, a shaft operated by an internal combustion engine, transmission gearing connecting the engine shaft and the dynamo shaft, sun and planet gearing embracing an annular gear rack connecting the dynamo shaft and the electric motor armature shaft, and an overrunning clutch wheel in connection with the dynamo shaft, which overrunning wheel is a part of the gearing between the dynamo shaft and electric motor shaft and transmits motion from the electric motor to the dynamo shaft, whereby motion can be transmitted from the motor shaft to the engine shaft by way of the dynamo shaft, and whereby the dynamo shaft at a certain speed will run free from the electric motor.

10. The combination of an electric motor having a shaft, a dynamo having a shaft, sun and planet gearing embracing an annular fixed gear rack connecting the motor shaft and dynamo shaft, an internal combustion engine shaft, gearing connecting the said engine shaft and the dynamo shaft, and means for preventing the transmission of motion from the dynamo shaft to the motor shaft when the dynamo is driven only by the engine.

In testimony whereof I affix my signature in presence of two witnesses.

GEORGE REED WADSWORTH.

Witnesses:
GORDON C. MARR,
T. J. WILLIAMS.

Copies of this patent may be obtained for five cents each, by addressing the "Commissioner of Patents, Washington, D. C."