Jan. 26, 1943. A. M. DOXSEY ET AL 2,309,106

FLUID MEDIUM DISTRIBUTION SYSTEM

Filed Oct. 31, 1939 2 Sheets-Sheet 1

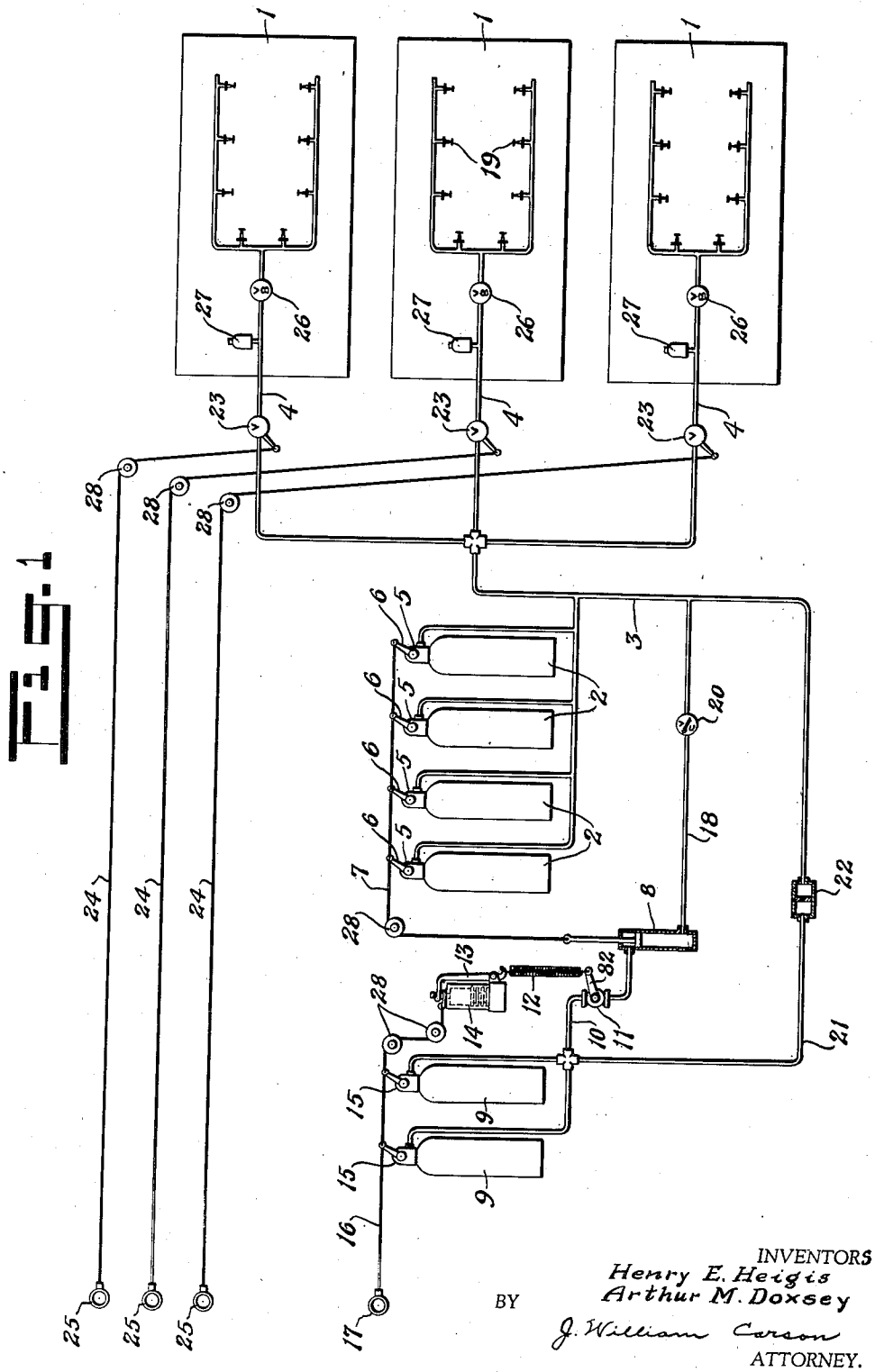

Fig. 1

INVENTORS
Henry E. Heigis
Arthur M. Doxsey

BY J. William Carson
ATTORNEY.

Jan. 26, 1943. A. M. DOXSEY ET AL 2,309,106

FLUID MEDIUM DISTRIBUTION SYSTEM

Filed Oct. 31, 1939 2 Sheets-Sheet 2

Fig. 2

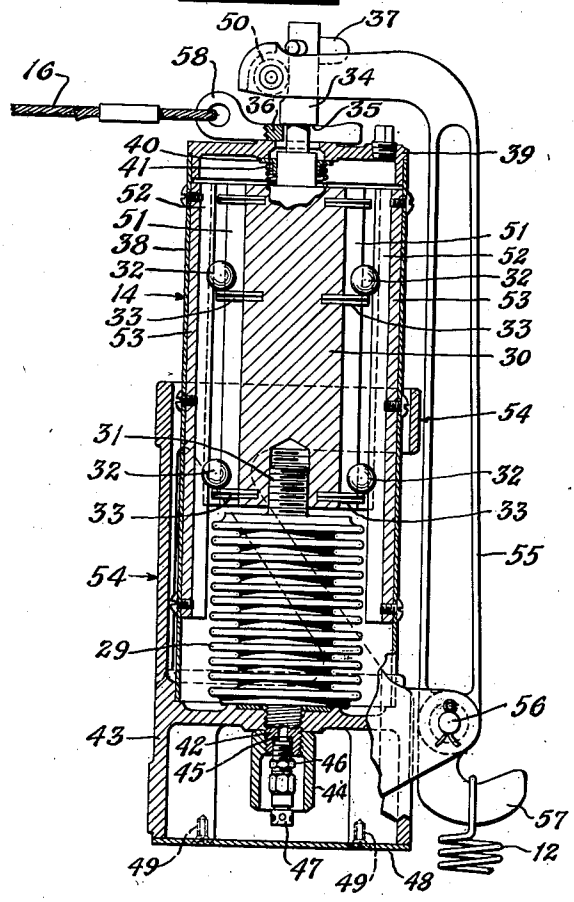

Fig. 3

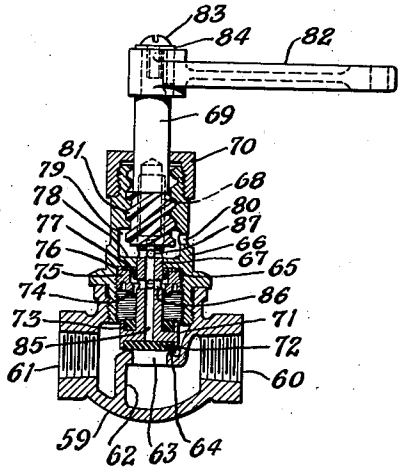

Fig. 4

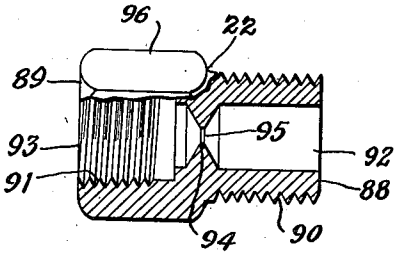

INVENTORS
Henry E. Heigis
Arthur M. Doxsey

BY J. William Carson
ATTORNEY.

Patented Jan. 26, 1943 2,309,106

UNITED STATES PATENT OFFICE

2,309,106

FLUID MEDIUM DISTRIBUTION SYSTEM

Arthur M. Doxsey, Lynbrook, N. Y., and Henry Ernest Heigis, West Orange, N. J., assignors to Specialties Development Corporation, Bloomfield, N. J., a corporation of New Jersey

Application October 31, 1939, Serial No. 302,202

7 Claims. (Cl. 169—11)

The present invention relates to fluid pressure medium distribution systems, especially as embodied in fire extinguishing systems employing carbon dioxide under pressure as the extinguishing medium. The carbonic acid in such systems is stored in containers under high pressure and, when required, is released into and distributed through appropriate distributing conduits which conduct it to the space afire.

More specifically, this invention relates to fire extinguishing systems of the type in which the pressure of a portion of the extinguishing medium is utilized to release the main portion of the stored gas into the distribution system, and in which the release of said main portion is somewhat delayed so as to permit of a warning to be given to occupants of the space to be flooded by the medium.

While the present invention incorporates certain features of the apparatus illustrated in Letters Patent of the United States Nos. 1,948,753; 1,965,845; 1,968,086; and 2,185,103, it differs therefrom in that it makes provision for the system to be operated in all its phases to a maximum degree by means of the pressure of its own fluid medium, and also in that it provides an individual alarm for each of a plurality of spaces under supervision.

In apparatus of this character, especially in the case of marine installations, it is desirable that the system be affected to a minimum degree by the ship's motion.

It is therefore an object of this invention to provide a high pressure fluid medium distribution system, as embodied in a fire extinguishing apparatus of the type referred to, which has a minimum of elements that may cause accidental release of the fluid medium by making it to the greatest possible extent fluid pressure operated.

Another object of the invention is to provide a fire extinguishing system which operates as outlined above without letting any of the available fluid medium go to waste, utilizing all such fluid available for its ultimate destination of flooding the space afire.

A further object of the invention is to delay the release of the main portion of the fluid medium while causing the fluid medium initially released to operate a warning signal in any one of a number of supervised spaces.

It is a still further object to preselect and establish a single discharge conduit for the extinguishing medium from among a plurality of possible outlets in accordance with requirements.

Further objects, not specifically enumerated above, will be apparent as the invention is described in greater detail in connection with the accompanying drawings, wherein:

Figure 1 is a view in side elevation and partly diagrammatic of a fire extinguishing system in accordance with our invention.

Figure 2 is a view in vertical section of a time delay device employed in the system of our invention.

Figure 3 is a view, partly in vertical section, of a fluid pressure operated stop valve as used in conjunction with the time delay.

And Figure 4 is a longitudinal sectional view of a fluid flow restricting member as used in the present system.

Referring now particularly to Figure 1, a plurality of spaces which are to be protected are indicated at 1; at 2 are shown a number of storage cylinders for liquid carbon dioxide discharging into main conduit 3 and into branch conduits 4 leading to the various spaces 1. Valves 5 of the containers 2 are controlled by levers 6 which in turn are actuated by a pull-cable 7 connected to a fluid pressure motor 8, preferably of the piston operated type as shown in Figure 6 of U. S. Patent No. 1,968,086. The motor 8 is operated by fluid supplied from master cylinders 9 through a conduit 10, the fluid flow therein toward the motor being controlled by a stop valve 11. The valve 11 in this particular embodiment of the invention, when unrestrained is operable by the pressure of the fluid on the up-stream side of the conduit 10 as will be described in detail somewhat later. It is restrained from being operated by the incoming fluid pressure medium by being connected through the medium of a spring 12 to a hooked lever 13 of a time delay device 14. Both the time delay 14 and the valves 15 of the containers 9 are released substantially concurrently through a pull-cable 16, actuated by a handle 17 which, of course, may also be an automatic release arrangement of any desired type. The valves 15 are connected to and actuated by the cable 16 somewhat in the same manner as are the valves 5 by the cable 7. A fluid flow conduit 18 connects the fluid escape end of the motor 8 with the main discharge conduit 3, the fluid having to pass through a check valve 20. A conduit 21 is provided between conduits 10 and 3 to by-pass the stop valve 11, motor 8 and conduit 18, including a flow restricting device at 22. The branch conduits 4 each have their own branch controlling distribution valve 23, which may be individually and selectively actuated through pull-cables 24 and

manual controls 25. In addition to the valves 23, the branch conduits 4 are each supplied with a so-called "booster" or differential pressure valve 26 which is designed to open only after a given maximum pressure has been attained in the corresponding branch conduit, which, however, will be held open by a pressure of a lesser value, in accordance with a system utilizing such a valve, such as described in United States Letters Patent No. 2,185,103. Each branch conduit is further supplied with a fluid flow operated alarm device 27, which may be of any type audibly indicating the flow of fluid therethrough. The alarm device is preferably placed within the confines of the space protected by the corresponding branch conduit terminating in any desired number of outlet nozzles 19 of any suitable type. In connection herewith the significance of the by-pass conduit 21 will be explained in detail at another point.

At 28 are shown corner pulleys adapted to facilitate the operation of pull-cables 7, 16, and 24.

Referring now to the time delay device 14 shown sectioned in Figure 2, a flexible bellows 29 is seen supporting a weight 30 which is screwed onto a threaded stem 31 carried by the bellows 29. The weight 30 is illustrated as being held in its uppermost position, but when released is free to move downwardly guided by the four ball bearings 32. The ball bearings 32 are supported by pins 33 projecting from the weight 30 and fit into two diametrically placed grooves or flutes 51 formed in the body of the weight. Complementary grooves 52 in longitudinal pieces 53 secured to the inside of the wall of an enclosing cylinder or shell 38 act, in conjunction with grooves 51, to form confining races for the ball bearings. A stem 34 projects from the top of the weight 30, which at 35 is formed with a shoulder beneath which a forked piece 36 is removably slipped to hold the weight in its nonactuated position. The ends of the forked piece 36 are raised slightly at their tips to keep the forked piece from working out. This forked piece 36 has an "eye" formation 58 to which is secured the pull-cable 16. A bar 37 is secured into the upper end of the stem 34 to serve as a manipulating handle for purposes of resetting.

The cylindrical shell 38 encloses the bellows 29 and the weight 30, and is closed at the top by a cover 39. The free space within the enclosing shell, which is made nonleaking, may be filled with either air or oil, usually the latter, as a precaution against corrosion and also for its braking and damping effect on the movements of the weight. The stem 34 slidably projects through an opening in the center of the cover 39, which opening is sealed against the entrance of dirt by a cup-shaped gasket 40 held in place by a spring 41 between the top of weight 30 and the under side of cover 39.

Referring again to the bellows 29, its lower end is provided with a hollow stem 42, threaded outwardly so that a hollow cylindrical shell 43 and a protecting tubular piece 44 may be screwed thereto. The stem 42 is recessed and threaded interiorly to receive a sealing washer 45, a coupling 46 and a vent assembly 47, attached to the coupling; said assembly being replaceable by vents of varying sizes. A vented cover 48 is secured to the shell 43 with screws 49. Pivotally secured at 56 to a supporting framework 54 encompassing the lower portion of the cylinder or shell 38, and which the shell 43 is an integral part, a lever 55 is shown normally being prevented from turning about the pivot by stem 34 and having an application hook 57, to which the spring 12 is removably applied. A small roller 50 is shown set into the lever at its upper end for the purpose of providing rolling friction between the lever 55 and the stem 34.

Referring now to Figure 3, a globe seat-type valve is shown partly in section, wherein 59 indicates the main valve body having an inlet 60 and an outlet 61, both interiorly threaded to receive corresponding conduits. A wall separating inlet and outlet is indicated at 62, an opening 63 being formed therein with an annular valve seat 64. An opening 65 in the upper central part of body 59 is threaded interiorly to receive therein a bonnet 66. The bonnet is centrally and longitudinally recessed to accommodate a valve stem having a lower part or portion 67 and an upper part or portion 69 threaded thereon at 68 and extending outwardly and beyond the bonnet 66, which latter is capped by a centrally apertured cap closure 70. The lower valve stem 67 is formed with a valve head 71 into which is embedded a valve, such as a valve disc 72. On the other side of the valve head 71 another valve disc 73 is secured adapted to seat on a second annular valve seat 74 formed on the nether side of a centrally apertured gland 75 threadedly secured into a corresponding recess 76 within the bonnet 66. A cup-shaped packing washer 77 is held in place by gland 75 against an annular wall 78 formed in bonnet 66. It will be seen that the lower stem portion 67 snugly fits into the aperture of the wall formation 78 and that the packing washer 77 seals the lower portion of the bonnet 66 from the upper part thereof as defined by the wall formation 78.

The upper part of bonnet 66 is formed on its lower inside into a chamber 79 which is vented to the atmosphere through a vent 80 provided in the wall of the bonnet. The wall of the bonnet above the chamber 79 is threaded interiorly at 81 to accommodate corresponding threads on that part of the upper stem portion 69 which extends within the bonnet. These threads 81 are of the low friction type, a given upward thrust on the valve disc 72, as by fluid pressure medium acting through inlet 60, being sufficient to cause a turning of the stem portions 67 and 69, and therefore a vertical movement of the valve and stem with respect to the bonnet 66 and the valve body 59.

An operating lever 82 is secured to the topmost portion of the stem part 69 by means of a screw 83 and a washer 84, and, as shown in Figure 1, is connected to the lever 55 of the time delay 14 through spring 12. The interposition of spring 12 allows for movements of the valve stem due to so-called "cold-flow" of the valve disc 72. The lower stem portion 67 is provided with intercommunicating axial and radial passages shown at 85, 86 and 87, which serve to vent the downstream side of the valve body 59 and the back of valve disc 72 to the atmosphere through vent 80 via the chamber 79. The action of the device just described is such that, when the valve 72 is seated on its seat 64 and the lever 82 is unimpeded from turning, a given fluid pressure established in the inlet 60 and acting on the valve will cause the turning of upper stem part 69 through threads 81 and thereby raise the valve 72 from its seat. The raising of the valve is comparatively quick and carries the valve up to a point where the second valve disc 73 seats on the second valve seat 74, thus to seal

the valve body proper 59, from communication with chamber 79 and vent 80.

In Figure 4, the flow restricting device 22, shown partly in section, is illustrated as a conduit coupling member having an inlet and an outlet end at 88 and 89 respectively, such ends, in the case where uniform piping is used throughout, being of such dimensions as to be usable in either direction. In the present case, the inlet end is threaded exteriorly at 90 and the outlet end interiorly at 91 for connection to correspondingly dimensioned conduits. An inlet passage 92 is separated from an outlet passage 93 by a constriction 94 forming a relatively short and narrow connecting passage 95 between the inlet and outlet. At 96 is indicated a hexagonal formation on the member to facilitate its manipulation.

The operation of the system shown in Figure 1 now will be explained:

In case of fire in any one of the protected spaces 1, the distribution valve 23 corresponding to the space afire is opened by means of a pull on the operating handle 25 and the pull-cable 24, and by a similar pull on the handle 17 and the cable 16, the valves 15 of the master cylinders 9 are opened, and substantially simultaneously the forked piece 36 of time delay 14 is pulled out from under the stem 34 to permit the weight 30 to slowly descend and to compress the bellows 29 at a rate of speed depending on the size of the vent 47. Fluid medium from the master containers 9 released into the conduit 10 is stopped from entering and operating the fluid motor 8 by the stop valve 11; it is, however, able through the by-pass conduit 21, and through the flow restricting device 22 to reach main conduit 3 to a small extent, and from there through one of the previously selected distribution valves 23 to pass to the corresponding branch conduit and out into the selected space through the alarm giving device 27, teed into the branch conduit 4. Discharge into and through the outlet nozzles 19 is normally prevented by the corresponding differential pressure valve 26.

After a given time interval, determined by the vent 47 in the time delay, the weight 30 and the stem 34 thereon will have descended sufficiently for the lever 55 to be able to swing freely about pivot point 56 due to the pull exerted on it by spring 12, and for the spring to be released therefrom, permitting the lever 82 to turn and valve 72 to be raised under the influence of fluid pressure acting through inlet 60. Motor 8, now accessible to the action of the fluid pressure medium in conduit 10, operates to pull the cable 7 and valve levers 6 connected thereto, thus releasing the fluid medium from the main bank of cylinders 2 by opening the valves 5. The fluid medium thus released discharges into the main conduit 3 and through the preselected open branch conduit 4 into the space afire, its pressure having caused the differential pressure or "booster" valve 26 to open. As already pointed out, the "booster" valve will be held open by a pressure very much less than that required to open it, permitting a practically complete exhaustion of the available fluid supply. After having done its work in the motor 8, the fluid from the master cylinders 9 passes into the main conduit 3 through the conduit 18 via the check valve 20, a path having now been established from the conduit 10 into the conduit 18 through the motor 8.

It is well to point out here that the purpose of orifice 22 is to prevent the pressure of the initially released fluid in conduit 10 from dissipating into delivery conduit 3 which is usually quite long and which may make impossible the operation of motor 8. Just enough fluid is allowed to pass through the orifice 95 of the flow restricting device 22 to operate the alarm 27, the "booster" valve in the selected branch conduit 4 serving to maintain the pressure therein at a sufficiently high point for the fluid flow alarm to be operated. Discharge of the main bank into the main and the respective branch conduit will cause the opening of the "booster" valve. The pressure, however, during said discharge is above that required to operate the alarm so that its operation is continuous.

The check valve 20 is placed into the conduit 18 to prevent fluid in the conduit 3 from reaching the motor 8 through the conduit 18 under any circumstances, such as might be the case before operation of the motor 8 when the fluid released from the master cylinders 9 reaches the conduit 3, or in case of the accidental or premature discharge of one of the cylinders 2, which of course would interfere with the operation of the motor 8.

From the foregoing description, it will be seen that a fire extinguishing system has been devised which is almost completely fluid pressure operated by the pressure of its own fluid medium, which utilizes said fluid to the full in flooding the selected space without any of it going to waste, while at the same time, the operation of a selective fluid discharge alarm arrangement is provided for. Further, it will be seen that these and the various other objects pointed out at the beginning of the specification have been accomplished.

Finally, while the invention has been described with reference to a specific embodiment, including elements such as the time delay, stop valve, the mode of release and other items, it is evident to one skilled in the art that the objects and advantages of the invention may be achieved by a combination of elements which differ specifically from those employed in this instance, the basic inventive concept being found in the system as a whole and as expressed in the following claims:

1. A fire extinguishing fluid medium, distribution system, comprising a delivery conduit for the fluid medium, low pressure and high pressure fluid medium operated devices in said conduit, a primary source of fluid medium releasably confined under pressure operatively connected to said delivery conduit, fluid pressure actuatable means for releasing the fluid medium from said primary source, a secondary source of fluid medium releasably confined under pressure operatively connected to said last named means, fluid flow control means between said secondary source and said primary source releasing means, time delay means to control said control means operable upon the release of said secondary source, fluid medium conducting means from said secondary source to said main conduit forming a direct fluid flow communication, and fluid flow restricting means in said last named conducting means, whereby upon release of said secondary source, fluid medium under low pressure and, after a given period, fluid medium under higher pressure reach said delivery conduit to operate said low pressure and said high pressure devices respectively.

2. In a fire extinguishing system having a primary source of fluid medium under releasably confined pressure, fluid pressure actuated release means for said primary source, a secondary source

of fluid medium releasably confined under pressure to actuate said release means, fluid flow control means operatively disposed between said secondary source and said release means, time delay means to control said control means operable upon the release of said secondary source, fluid medium delivery conduit means for said primary source, and low and high pressure operable devices in said conduit means; the combination of conduit means forming direct fluid flow communication between said secondary source and said delivery conduit, and fluid pressure restricting means in said last recited conduit means, whereby low and high pressure fluid medium reach said delivery conduit means in sequence to operate said low and high pressure devices respectively upon an initial release of the secondary source.

3. A fire extinguishing fluid medium distributing system for the protection of a plurality of enclosures, comprising a main delivery conduit for the fluid medium, secondary conduits leading from said main conduit to each of said enclosures; a selective fluid medium admission valve, fluid flow operated alarm means and fluid medium discharge restraining means adapted to become ineffective above a given pressure, in each of said secondary conduits; a primary source of fluid medium releasably confined under pressure operatively connected to said main conduit, fluid pressure actuatable means for releasing the fluid medium from said primary source, a secondary source of fluid medium releasably confined under pressure operatively connected to said last named means, means normally interrupting the operative connection between said secondary source and said primary source releasing means adapted to be operated to become ineffective when acted upon by fluid pressure from said secondary source, releasable time delay means adapted to restrain said interrupting means from being operated for a predetermined time interval after said secondary source has been released; fluid medium conducting means for conducting the fluid from said secondary source to said main conduit in fluid flow connection with said fluid pressure actuatable releasing means and operatively associated with said means to interrupt; a second fluid flow conducting means from said secondary source to said main conduit adapted to by-pass said fluid flow interrupting means, said releasing means and said first named fluid flow conducting means; and fluid flow restricting means in said by-pass means adapted upon release of the fluid medium of the secondary source to permit enough fluid to reach said main and the selected branch conduit to operate the corresponding alarm device but not enough to render ineffective said discharge restraining means.

4. A fire extinguishing fluid medium distributing system for the protection of a plurality of enclosures, comprising a main delivery conduit for the fluid medium, secondary conduits leading from said main conduit to each of said enclosures; a selective fluid medium admission valve, fluid flow operated alarm means and fluid medium discharge restraining means adapted to become ineffective above a given pressure, in each of said secondary conduits; a primary source of fluid medium releasably confined under pressure operatively connected to said main conduit, fluid pressure actuatable means for releasing the fluid medium from said primary source, a secondary source of fluid medium releasably confined under pressure operatively connected to said last named means, fluid medium conducting means from said secondary source through said fluid pressure actuatable releasing means to the main conduit adapted to become effective after operation of said primary source releasing means, means normally interrupting the operative connection between said secondary source and said primary source releasing means adapted to be operated to become ineffective when acted upon by fluid pressure from said secondary source; releasable time delay means adapted to restrain said interrupting means from being operated for a predetermined time interval after said secondary source has been released; fluid medium conducting means from said secondary source to said main conduit adapted to by-pass said fluid flow interrupting means and said releasing means; and fluid flow restricting means in said by-pass conducting means adapted upon release of the fluid medium of the secondary source to permit enough fluid to reach said main and the selected branch conduit to operate the corresponding alarm means but not enough to render ineffective said discharge restraining means.

5. In a fire extinguishing system having a primary source of fluid medium releasably confined under pressure, fluid pressure actuated release means for said primary source, a secondary source of fluid medium releasably confined under pressure to actuate said release means, and a main fluid delivery conduit for said primary source having an operative connection to said secondary source: the combination of fluid flow control means operatively disposed between said secondary source and said release means; a direct fluid flow by-pass communication from said secondary source to said delivery conduit; and time delay means operatively controlling said control means and thereby said release means, whereby the pressure of the fluid medium reaching said delivery conduit initially and ultimately is controlled by said control means and said time delay means.

6. A fluid pressure medium distributing system, comprising a delivery conduit for the fluid medium; fluid flow operated alarm means and fluid medium discharge restraining means adapted to become ineffective above a given pressure, in said delivery conduit; a primary source of fluid medium releasably confined under pressure connected to said delivery conduit, fluid pressure actuatable release means for said primary source, a secondary source of fluid medium releasably confined under pressure operatively connected to said last named means, release means for said secondary source, means to control the fluid flow in the connection between said secondary source and said primary source releasing means, time delay means to control said fluid flow control means operable upon the release of said secondary source release means, fluid medium conducting means forming a direct communication between said secondary source and said delivery conduit, and fluid flow restricting means in said last recited conducting means; whereby upon release of said secondary source, fluid medium under low pressure and, after a given period, fluid medium under higher pressure reach said delivery conduit to operate said alarm means and said restraining means respectively.

7. A fluid pressure medium distributing system, comprising a delivery conduit for the fluid medium; a plurality of branch conduits for said delivery conduit each having a selectively operable admission valve, fluid flow operated alarm means and fluid medium discharge restraining

means adapted to be come ineffective above a given pressure; a primary source of fluid medium releasably confined under pressure connected to said delivery conduit, fluid pressure actuatable release means for said primary source, a secondary source of fluid medium releasably confined under pressure operatively connected to said last named means, release means for said secondary source, means to control the fluid flow in the connection between said secondary source and said primary source releasing means, time delay means to control said fluid flow control means operable upon release of said secondary source release means, fluid medium conducting means forming a direct communication between said secondary source and said delivery conduit, and fluid flow restricting means in said last recited conducting means; whereby upon release of said secondary source, fluid medium under low pressure and, after a given period, fluid medium under higher pressure reach said delivery conduit and a preselected branch conduit to operate said alarm means and said restraining means therein respectively.

ARTHUR M. DOXSEY.
HENRY ERNEST HEIGIS.