May 2, 1950 D. H. ROBBINS 2,505,836

FASTENER FOR INDENTIFICATION TAGS

Filed Dec. 8, 1945

Fig. 1



Fig. 3

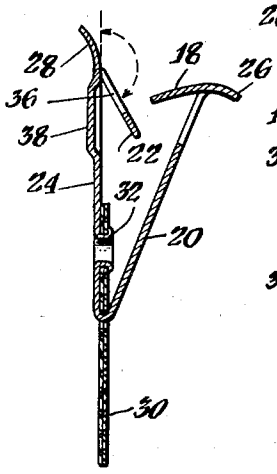

Fig. 4

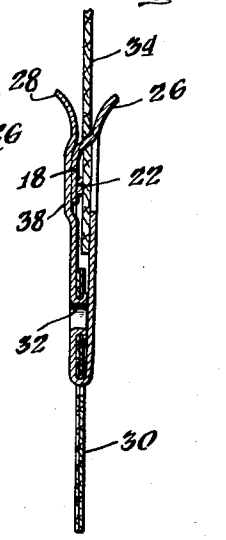

Fig. 2

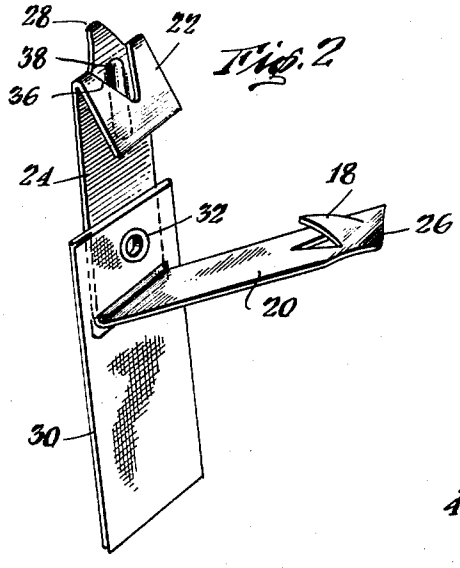

Fig. 5

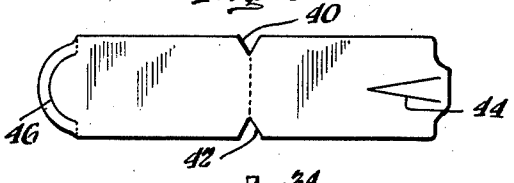

Fig. 7

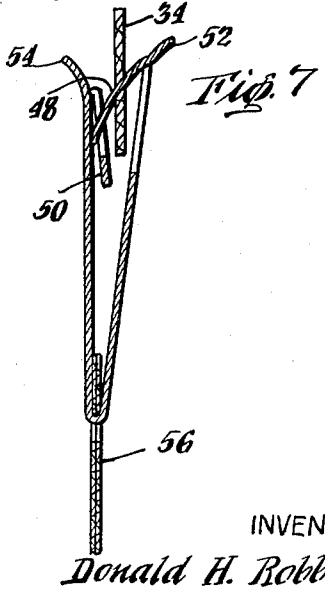

Fig. 6

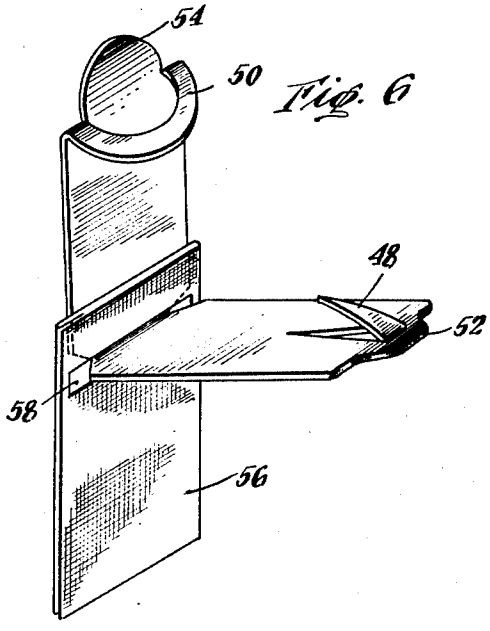

INVENTOR

Donald H. Robbins

BY Robert Calvert

ATTORNEY

Patented May 2, 1950 2,505,836

UNITED STATES PATENT OFFICE

2,505,836

FASTENER FOR IDENTIFICATION TAGS

Donald H. Robbins, Brooklyn, N. Y.

Application December 8, 1945, Serial No. 633,577

4 Claims. (Cl. 24—153)

1

This invention relates to a fastener, particularly to a fastener for holding an identification tag to penetrable material.

Fasteners of this general class are widely used in tagging many articles of which clothing to be dry-cleaned, laundered or stored is an example.

My invention provides an improved fastener in which a tongue is clinched and held securely between an anchoring member on one side and an anvil on the other and, on the other hand, a fastener that may be readily opened for removal or reuse. My invention provides also a manner of holding the tongue between the anvil and the anchor so that both the tongue and the anvil are reformed in the opening process, to shapes adapting them to reengage each other when the fastener is again put to use.

The invention comprises the herein described fastener of normally shape-retaining but bendable sheet material having face and back members each of which have one free end but are united at the midportion which, when the fastener is closed, becomes the zone of bending; the fastener having at one end, an anchor provided with a hole and at the other free end a tongue, the opening and tongue being spaced approximately equidistant from the zone of bending, so that they register when the closing is completed; the anchor and the tongue each extending inwardly at an angle of more than 90° when measured from the free end of the strip provided with the anchor and tongue, respectively; and the fastener including an anvil portion extending behind the said opening in the anchor so that, when the fastener is closed, the tongue is clinched between the anvil on one side and the anchor on the other. In the preferred embodiment, which adapts the fastener to be opened for being removed from the garment or for reuse there are projections at the free ends, beyond the bases of the anchor and tongue, respectively, and the projections are suitably bent so that the free ends constitute tabs flaring outwardly in the closed fastener and provide for access to the tabs and thus facilitate the application of a spreading force to the fastener. In one embodiment, an identification tag is engaged by passage of the strip fastener through a slot in the tag and the tag at another part is fastened to an inner face of the fastener, so as to keep the tag in alinement with the fastener.

The invention will be illustrated by description in connection with the examples of the fastener illustrated in the attached drawing to which reference is made.

2

Fig. 1 shows in plan a strip fastener in an intermediate stage in its manufacture or development.

Fig. 2 shows a perspective view of the completed fastener and identification tag attached thereto, the fastener being in open but partly folded condition.

Fig. 3 shows in section the fastener and tag, the fastener being in open but partly closed position.

Fig. 4 shows a section of an assembly in which the fastener is completely closed over a sheet material.

Fig. 5 shows a modified form of fastener in the incomplete or development stage.

Fig. 6 shows a perspective view of a completed fastener of the class shown in Fig. 5 in open position and with identification tag engaged over the fastener.

Fig. 7 is a sectional view of the assembly of Fig. 6 in almost but not entirely closed position around a fragment of sheet material.

There is shown a strip 10 of normally shape retaining but bendable sheet material that is preferably thin metal such as zinc, aluminum, brass, or tinned iron. During the fabrication of the fastener, the strip is cut as shown by the solid lines 12 and 14, the cuts being near the free ends of the parts which, in the finished assembly, constitute the face and back and which are joined along the dotted line 16, a line which represents the approximate position of folding or bending when the fastener is put to use.

Bending inwardly the material within the notch 12 provides a narrow pointed tongue 18. This tongue is depressed by less than 90°, so that it extends at an angle of more than 90° as measured from the free end of the face portion 20 from which the tongue is formed, the direction of measurement of the angle being shown by the dotted line of Fig. 3.

Bending inwardly the material beyond the lines of cutting 14 of Fig. 1 through more than 90° forms the anchor 22 near the free end of the back 24 of the fastener. This anchor forms an angle of more than 90° with the material of the free end of the back of the fastener.

In other words, both the anchor and the anvil are inclined toward the zone of bending of the fastener, when the fastener is bent.

The free ends of the front and back are provided with tabs 26 and 28 that extend beyond the base of the tongue and anchor, respectively. These projections provide positions for applying

a spreading force to open the fastener once it has been closed to the position shown, for instance, in Fig. 4. In fact, when the projections flare as there shown they may be held by the fingers and the whole fastener readily spread apart manually.

The identification tag or label shown at 30 suitably is held by means such as the eyelet 32 to the body of the fastener so that alinement of the tag with the fastener is established at all times.

The goods to which the fastener is applied are represented by sheet material 34 of Figs. 4 and 7.

The anchor is provided with opening 36 behind which the material of the back 24 extends continuously so as to provide an anvil for clinching the tongue 18 when the fastener is completely folded together. Suitably this anvil is provided with an elongated depression 38 which serves to guide the tongue 18 as it is being clinched and, by means of the side walls of the depression, prevents lateral slipping of the tongue after it is engaged between the anvil and the anchor.

In the form shown in Figs. 5 and 6 the bendable strip material is cut out at notches 40 and 42 so as to form a zone of weakness and establish in advance the position of folding of the strip when the bending pressure is applied. In this form, the sheet material is cut at positions corresponding to the solid lines 44 and 46 and the cut parts are then bent as shown in Fig. 6 to give in the face portion the tongue 48 and in the back the anchor 50 provided with a generally rounded opening. In this form also parts of the free ends 52 and 54 project so as to give finger holds for opening the fastener after it has been clinched. The identification label is engaged by means of a slot 58 over the strip material.

The operation of the fastener will be largely evident from the description of it that has been given. After the label 30 or 56 of cloth, paper, cellophane, or the like has been applied, the fastener is inserted over the edge of the textile, paper, or other goods to be marked and then the free ends of the fastener are forced together. The narrow tongue 18 or 48 is thus caused to perforate the goods and to extend through the opening in the anchor 22 or 50. Because of the angular relationship of the anchor and tongue, to form oblique angles, as measured from the portions of the free ends of the face and back extending beyond the base of the tongue and anchor, the pressure finally applied to seal the fastener causes the tongue to be bent with its point extending towards the zone of folding at the midpoint of the fastener. Furthermore this pressure completes the bending of the anchor so that the anchor rests directly upon the tongue as shown, for instance, in Fig. 4. The tongue is made therefore to conform roughly at least to the anchor on one side and on the other the anvil.

When it is desired to open the fastener, then the application of properly directed hand pressure, for instance, to parts 26 and 28 (Fig. 4) cause the face and back to move away from each other. The pull on the tongue 18 or 48 and the anchor 22 or 50 is such that both the tongue and the anchor in the given assembly are flexed and restored approximately to their original angles such, for example, as shown in Figs. 3 and 6, or at least so near to those angles that the fastener may be reinserted over sheet material for reuse and the tongue again clinched by forcing together the free ends of the fastener.

It will be noted as from Fig. 2 that the one 26 of the said tab portions which is adjacent to the anchor 22 is in reality struck out from the anchor. This means that this part 26 at its base is of the same width as the width of the opening 36 at the position of meeting of the anchor with the back of the fastener and that the said part is in line or registration with the opening. If, due to a slight error in the shaping of the fastener, the tongue 18 should miss the back of the fastener during the clinching operation, this tongue 18 would strike the part 26 and be directed by it behind the anchor 22.

It will be noted also from Fig. 2 that the anchor is notched so that the amount of material on the line of bending of the anchor, that is at the position of meeting with the back 24, is at a minimum. This introduces a zone of weakness and establishes the line of bending during clinching, i. e., along the weak zone at the base of the notch, on the line of meeting of the anchor with the back 24.

The apparatus is inexpensive and simple in its construction. When closed upon the goods it holds firmly and securely. On the other hand, the face and back of the fastener after being fully closed are readily spread apart and restored to conditions for reuse.

It will be understood that it is intended to cover all changes and modifications of the example of the invention herein chosen for the purpose of illustration which do not constitute departures from the spirit and scope of the invention.

What I claim is:

1. A reusable fastener of bendable but normally shape retaining sheet material comprising face and back members that are generally flat, have each a free end, and at the other end are united in a zone of folding when the fastener is in use; an anchor element extending inwardly from a position near the end of the back and at an angle of more than 90° from the material of the said end and provided with an opening, the opening extending to the said position at which the anchor element meets the back so as to weaken the anchor at this position and promote bending at this position during clinching of the fastener; a tongue extending inwardly from a position near the end of the face at an angle of more than 90° with the material of the end of the face, the opening in the anchor and the tongue being spaced approximately equidistant from the said zone of folding, so that the tongue will enter the opening when the ends of the face and back are forced near together by folding; an anvil part disposed back of the opening so as to clinch the tongue in sealing position between the anchor and the anvil during said folding; and tab portions of the free ends of the face and back extending beyond the bases of the anchor and tongue, respectively, so as to provide members for the application of force to spread apart the free ends when it is desired to open the previously closed fastener.

2. A fastener as described in claim 1, the tongue being narrow and pointed, the said opening being enclosed on all sides by material of the anchor, the anchor being generally flat, so that, when the tongue is clinched in the completed folded assembly, the tongue approximately conforms on one side with the anchor and on the other side with the anvil, and the one of the tab portions adjacent to the anchor being of width at its base approximately equal to that of the said opening at the position of meeting of the anchor element with the back and registering with the said opening, so that the said one of the tab portions serves

as a guide for the tongue during clinching of the fastener.

3. A fastener as described in claim 1, the said tab members flaring in direction away from each other when the fastener is completely folded, so as to provide accessibility to the tabs.

4. A fastener as described in claim 1, the anvil being provided with an elongated depression to receive the tongue and decrease lateral slipping of the tongue after clinching.

DONALD H. ROBBINS.

REFERENCES CITED

The following references are of record in the file of this patent:

UNITED STATES PATENTS

Number	Name	Date
731,827	Washburne	June 23, 1903
917,010	Coy	Apr. 8, 1909
1,174,033	Abbott	Mar. 7, 1916
1,177,051	Possner	Mar. 28, 1916
1,822,421	Rench	Sept. 8, 1931