Oct. 15, 1929. J. REANEY 1,731,984

LOAD SUSPENSION AND HOISTING MECHANISM

Filed Jan. 10, 1927 4 Sheets-Sheet 1

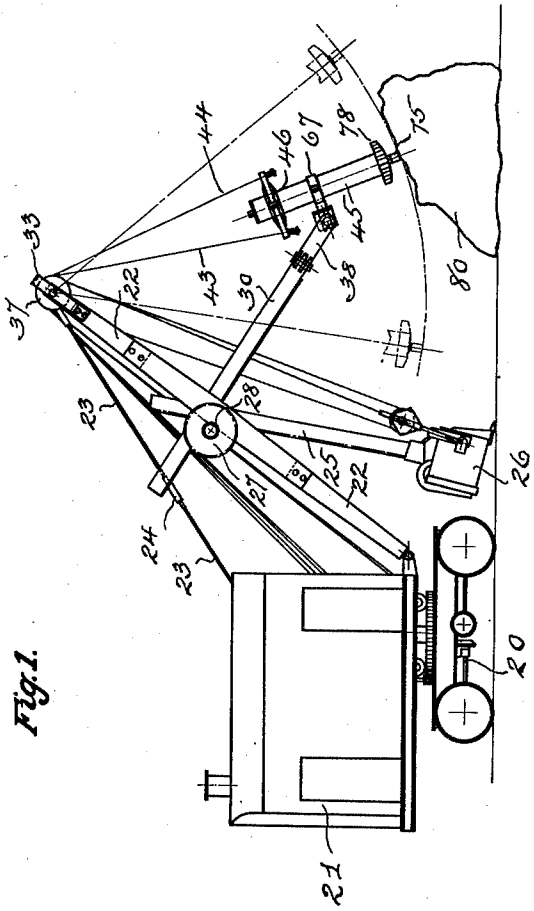

Fig. 1.

INVENTOR.

BY James Reaney

Charles B. Manns Jr.

ATTORNEY.

Oct. 15, 1929. J. REANEY 1,731,984

LOAD SUSPENSION AND HOISTING MECHANISM

Filed Jan. 10, 1927 4 Sheets-Sheet 2

Fig. 4.

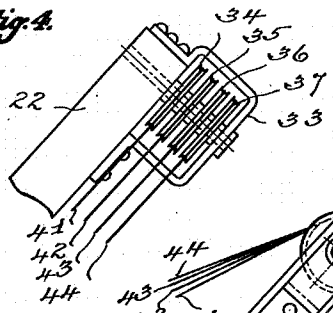

Fig. 3.

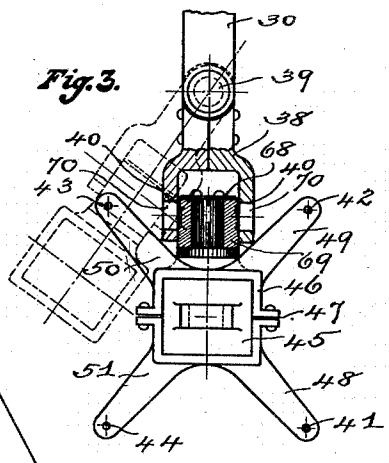

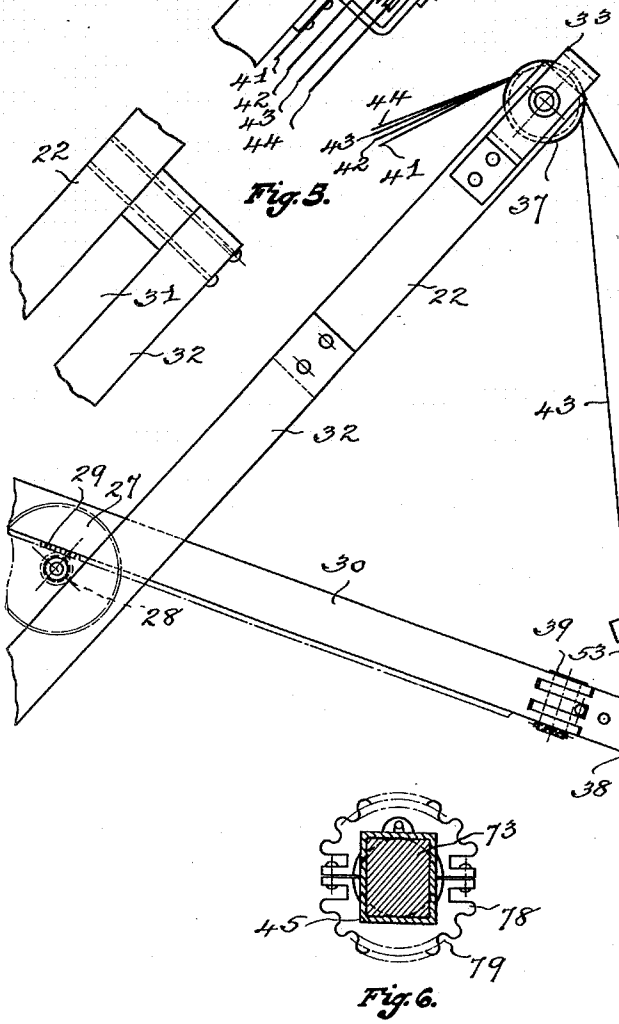

Fig. 2.

Fig. 6.

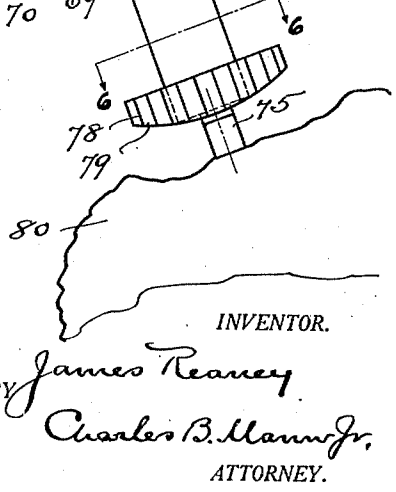

INVENTOR.

BY James Reaney

Charles B. Mann Jr.

ATTORNEY.

Oct. 15, 1929. J. REANEY 1,731,984

LOAD SUSPENSION AND HOISTING MECHANISM

Filed Jan. 10, 1927 4 Sheets-Sheet 3

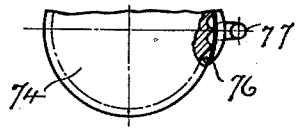

Fig. 12.

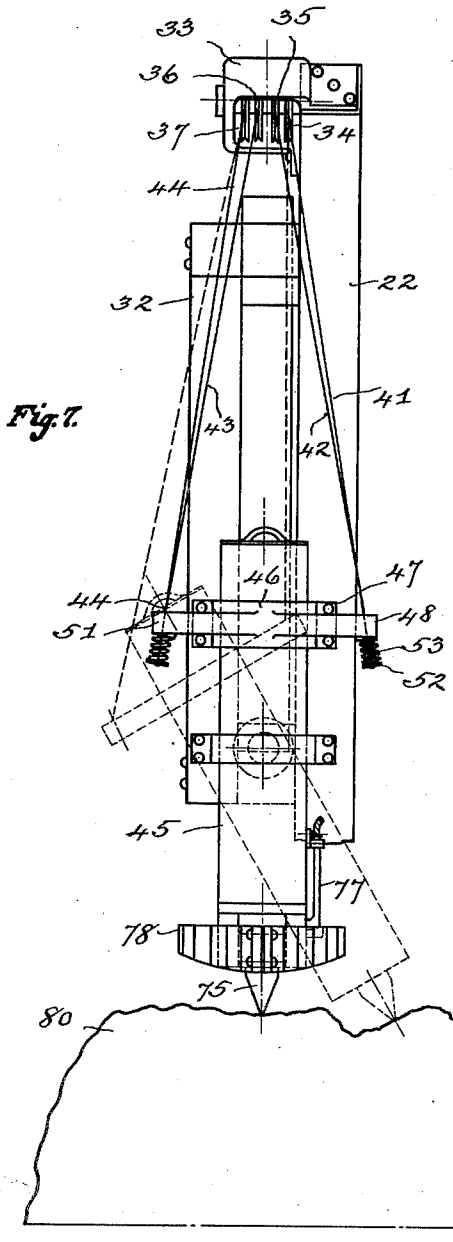

Fig. 7.

Fig. 9.

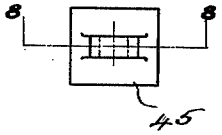

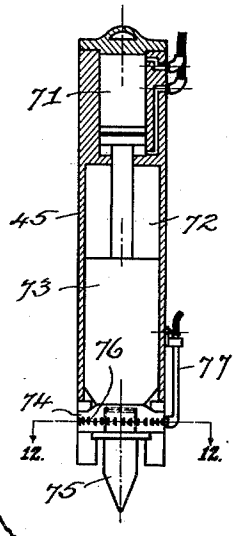

Fig. 8.

Fig. 10.

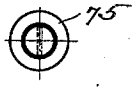

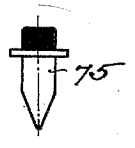

Fig. 11.

INVENTOR.

BY James Reaney

Charles B. Manny Jr.

ATTORNEY.

Oct. 15, 1929. J. REANEY 1,731,984

LOAD SUSPENSION AND HOISTING MECHANISM

Filed Jan. 10, 1927 4 Sheets-Sheet 4

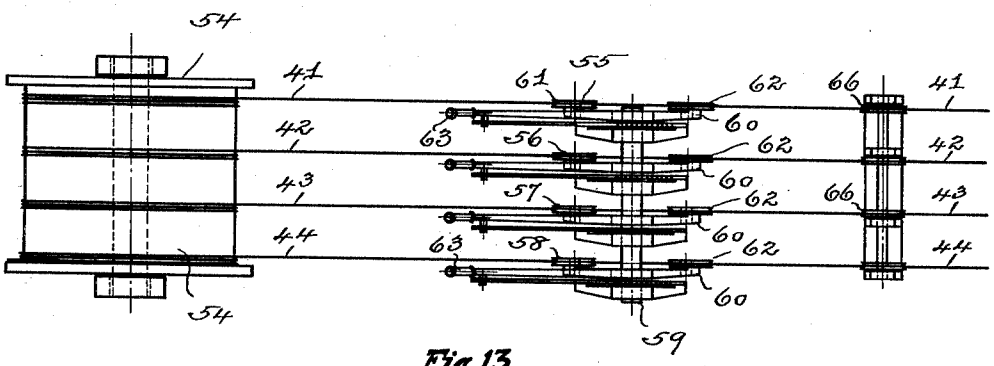

Fig. 13.

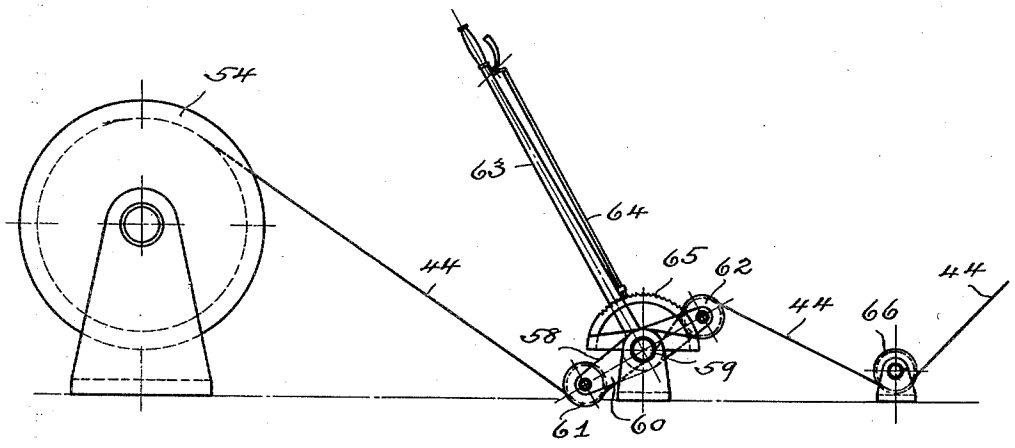

Fig. 14.

INVENTOR.

BY James Reaney

Charles B. Mann Jr.

ATTORNEY.

Patented Oct. 15, 1929 1,731,984

UNITED STATES PATENT OFFICE

JAMES REANEY, OF BALTIMORE, MARYLAND

LOAD SUSPENSION AND HOISTING MECHANISM

Application filed January 10, 1927. Serial No. 160,168.

This invention relates to improvements in suspension and hoisting mechanism and is particularly directed to a mechanism for sustaining a load in such manner that the same may be raised or lowered, and while suspended, may be moved laterally or tilted in any direction.

The improvements also include a structure whereby while the load is held suspended, it may be swung in a circular path and may also be raised or lowered while held in the adjusted and tilted position.

Mechanism embodying the invention may be utilized for various purposes where the load is to be raised, lowered, swung or tilted, but by way of illustration I have shown the same in connection with a tool, machine or hammer structure which is associated with a power shovel and operated from the cab or platform on which the power means is located and all being mounted on a movable truck or tractor so that both mechanisms may be operated from the same station.

In the practical operation of a stone quarry, I have found that many huge boulders may be readily broken up by power hammers, if the hammer is properly presented to the face of the boulder, and that, if a hammer can be used, an enormous saving in time and expense over drilling and blasting operations will result as also a greatly reduced risk to life and property.

Moreover, when boulders are drilled and blasted to reduce them to a size that will permit of their handling by shovel and crushers, all apparatus must first be removed from the zone of the blasting operation, and the workmen find places of safety, then when blasting takes place the rock is scattered, and quantities of it thrown beyond the reach of a power shovel when the latter is brought back to position for work, whereas by utilizing a power hammer and properly presenting that hammer to the rock, the latter may be readily split and broken without the disadvantage of scattering.

A hammer suitable for breaking rock under the conditions above stated, must necessarily be extremely heavy, and must be raised, lowered, swung and tilted by power means in addition to the power means that actuates the hammer itself to produce the powerful blow necessary to split or break the rock.

One object therefore of my invention is to provide means that will sustain a hammer in such way that it may be properly presented to the rock to make its blow effective.

With the above, and other objects in view, the accompanying drawing illustrates an embodiment of the invention, wherein,—

Fig. 1 shows in side elevation a portable vehicle carrying a power-operated shovel and also carrying a suspension and hoisting mechanism embodying my invention.

Fig. 2 illustrates a portion of the boom, the hammer stick, hammer and suspension means, all in side elevation, and shows the hammer held in a tilted position and seated against the face of a rock which is to be split.

Fig. 3 shows the hammer and spreader-arms together with the forward end of the hammer stick,—part of which is in section,.the same being a plan view.

Fig. 4 illustrates the upper end of the boom in plan view.

Fig. 5 shows another plan view of a portion of the boom at the point where the hammer stick passes therethrough.

Fig. 6 illustrates a cross-sectional detail through the lower end of the hammer,—the section being taken on the line 6—6 of Fig. 2.

Fig. 7 shows the boom, hammer-stick, hammer and suspension means in front elevation.

Fig. 8 illustrates a vertical sectional detail through the hammer,—the section being taken on the line 8—8 of Fig. 9.

Fig. 9 shows the hammer in top view.

Figs. 10 and 11 illustrate side and top views respectively of the detached tool.

Fig. 12 shows a top view of the head which carries the tool,—the same being shown as viewed on the line 12—12 of Fig. 8.

Fig. 13 illustrates the cable winding and tension-varying means in top view, and

Fig. 14 shows the same in side elevation.

Referring to the drawings and particularly Fig. 1 thereof, the numeral 20, designates a truck on which there is a cab 21 in which the power plant is located. The particular construction of the truck, the cab thereon, or the

power-plant is not material to this invention but the cab and power plant, as is usual in similar structures are mounted so as to be turned on the truck or to be advanced with the truck.

In this instance, the cab carries a boom 22, whose lower end is attached to the base of the cab and whose upper end is sustained by rods 23 and turn-buckles 24, whereby to support the boom in an inclined position from the base of the cab. These particular supports for the boom however are not material to the present invention and may be varied.

In the structure shown, the boom 22 sustains a dipper stick 25 and dipper or shovel 26, which may be operated in any of the well-known ways.

On the boom 22, I locate a power device 27, which has a pinion 28 that engages a rack 29 on a hammer-stick 30 whereby to move the hammer-stick forward or backward with respect to the boom for a purpose that will presently be explained.

The hammer-stick is guided in its forward or backward movement by sliding in a vertical channel 31 formed at the side of the boom by a spaced guide-bar 32, shown in Figs. 2, 5 and 7 of the drawings.

At the upper end of the boom 22, I provide a bracket or housing 33, in which there are loosely mounted a plurality of idler pulleys. In the present instance four pulleys, 34, 35, 36 and 37 are shown but the number may be varied.

The forward part of the hammer-stick 30 carries a bifurcated bracket 38 which latter is pivoted at 39 to said stick so as to permit it to swing laterally, and the bracket has horizontal pivot-bearings 40, therethrough, as shown in Figs. 2 and 3 of the drawings, for a purpose that will presently be explained.

Cables 41, 42, 43, and 44 pass around the pulleys 34, 35, 36 and 37 respectively and the forward ends of these cables are designed to be attached to the load that is to be raised, lowered or tilted, which in the structure illustrated in this instance is presumed to be a hammer structure 45.

In making this attachment of the cables to the load, or in this instance to the hammer structure 45, it is important that the cables, at the point of attachment, be sufficiently spread to prevent them fouling and also to enable the load to be shifted by either increasing or lessening the tension of the load on one or more of the cables which suspend the load.

In the present instance, I provide a spreader frame 46, which is clamped at 47 about the hammer structure and this frame has a plurality of arms. While the number of these arms may vary I show, in the present disclosure, four arms which are designated 48, 49, 50 and 51, and the lower ends of the hoisting and suspension cables 41, 42, 43 and 44 are connected respectively to the said arms.

By preference, I make the connection between the cable-ends and the arms elastic or yielding by passing the cables through the arms and attaching them to plates or disks 52 and then interposing coiled springs 53 between the disks and the under sides of the arms.

The cables 41, 42, 43 and 44 all extend from the upper end of the boom 22, back to the cab 21, and in this instance are shown as being wound about a power-driven drum 54, which latter is designed to be operated like any hoisting drum to wind or unwind the cables at will.

It will be noted however that in carrying out my invention, I preferably wind all of the hoisting and suspension cables about the same drum so that when the drum is turned, all of the cables will be wound or unwound. This simplifies the structures over one wherein each cable is wound about a separate drum, and other advantages result from the use of a single drum, as will presently be pointed out.

Between the drum 54 and the upper end of the boom, I interpose a means for varying the tension of the load on any one of the cables independently of the others by making a cable take more or less of the load.

The expression "varying the tension" with reference to the cables is adopted after due consideration for if any one of the cables is operated so its suspending end at the load is lowered, then the tension on that one or more of the cables is lessened and the load itself will shift correspondingly and if one or more of those cables is or are operated so its or their suspending end or ends is or are elevated, then such cable or cables will carry more of the load or have their tensions increased and the load will also shift or turn at an angle corresponding to the variation in such cable-tension.

The varying tension of the cables is effected, in this instance, by normally providing a bend or loop in the stretch of each cable and then to decrease the tension straightening out the bend or to increase the tension increasing the bend or loop.

By reference to Figs. 13 and 14 of the drawings, it will be noted that each cable passes around a tension-varying device, the same being designated 55, 56, 57 and 58 respectively.

These devices are all mounted on a horizontal shaft 59 and each has a rocking-beam 60 with idler rollers 61 and 62 at opposite ends thereof.

Each beam is provided with an actuating lever 63 with a locking-pawl 64 associated therewith, and a segment rack 65, is provided for engagement by the pawl in order that the beams may be held in any desired rocked position.

The cables pass from the drum 54, to and

around the under side of rollers 61 on one end of the rocking-beams; then over the upper side of the rollers 62, at the opposite end of the beams, and then, in this instance, beneath a series of idler pulleys 66, on their way to the pulleys 34, 35, 36 and 37 at the end of the boom.

The tension-varying devices, preferably, are normally set in an inclined position, as shown in Fig. 14 of the drawings so that a bend will be formed in each cable between the drum 54 and the idler pulleys 66, instead of allowing those cables to run in a direct straight line from the drum to said pulleys.

Obviously, if the lever 63, shown in Fig. 14, is swung to the right, the bend in cable 44, shown in that view, will be let out, consequently the load-end of that cable will be lowered and the load at the lower end of that cable will shift its position and tilt as it takes up the slack thus provided.

Thus by varying the tension of the cables, the load may be tilted by making the suspension cables of unequal tension so that the load may be made to take any one of a wide range of tilted or inclined positions.

To facilitate the accurate placing of the suspended load, in this instance the hammer, I provide a frame 67 about the body of the hammer structure, which frame has a stud 68 projecting from one side thereof, as shown in Fig. 3 of the drawing, and this stud enters a trunnion-block 69, whose trunnions 70 are pivotally mounted in the bifurcated bracket 38 at the forward end of the hammer-stick.

By means of the stud 68 and the trunnions 70, the hammer structure may be swung fore or aft or tilted to either side of the outer end of the hammer-stick, while the hammer-stick may be moved forward or backward to locate the load directly over the place it is desired to put it.

After thus locating the load or hammer, any of the cables may be drawn back or let out to tilt the load or hammer to the precise position over the work so that the hammer may operate in a direction at any angle to the face against which the blow is to be directed.

The hammer structure in this instance has a piston-chamber 71 and a ram-chamber 72,—the piston being operated by fluid-pressure to move the ram 73.

While any desired form of hammer structure may be employed, I prefer to use one having an anvil-plate 74 at the lower end in which the tool 75 is carried so that the blow of the ram will be on the anvil-plate and through the latter to the tool.

I may also provide an anvil-plate 74, with pockets or cavities 76 around its periphery so that by directing a blast of fluid under pressure tangentially into the pockets cause the plate and its tool to turn so as to present the faces of the tool to the work to the best advantage.

A fluid-supply pipe 77 is therefore shown at the side of the anvil-plate through which the fluid under pressure may be delivered to the plate-cavities.

I have also found it desirable to clamp a shoe-guard 78 about the anvil-plate 74 to protect the latter, and by providing this guard with a series of peripheral projections, grooves or corrugations 79, the guard when dragged over a broken rock will engage same and separate or turn over the broken parts for further breaking if desired.

In the operation of the device the cab 21, may be turned on the truck 20 so the boom 22 may project over the rock 80 that is to be broken. The hammer-stick 30 may then be operated to push the hammer structure out or draw it back so as to present the hammer directly over the rock. If the face of the rock is such that the hammer should be tilted or inclined to present the tool at an angle thereto, then the cable tension-varying devices may be operated to tilt or incline the hammer structure in the desired direction by raising or lowering the load end of any one or more of the cables, several positions being indicated by broken lines in Figs. 1 and 7 of the drawings.

When the tool 75, is properly positioned against the rock, the ram 73 will be operated to drive that tool into the rock and thereby split it and when the parts have been broken up sufficiently to enable the dipper or shovel 26 to handle them, the hammer will be moved and the dipper operated to remove the broken rock. During the breaking operation, as the tool enters the rock to split it, the guard 78 will serve as a stop by coming in contact with the broken rock and thereby relieve the cables and suspension mechanism of the shock from the hammer blow.

By utilizing a single drum 54 for all of the cables, it will be obvious that after the tension-varying devices have been actuated to vary the tension on any one or more of the cables and the load thereby tilted to the desired angle, the one drum may be turned so that the load may be raised or lowered while in the previously tilted or inclined position, or the tilting may be effected during the raising or lowering of the load.

Having described my invention, I claim:—

1. In a load suspension and hoisting mechanism the combination with a hoisting mechanism, of a boom, a plurality of cables operated by the hoisting mechanism and directed by the boom to the load,—said cables being attached to the load at a plurality of spaced points, means for operating one cable independently of another to tilt the load attached thereto and a longitudinally movable bar with means for pivotally attaching it to the load to move the latter to a position out of plumb with respect to the suspension point of the boom.

2. In a load suspension and hoisting mechanism the combination with a hoisting mechanism, of a boom, a plurality of cables operated by the hoisting mechanism and directed by the boom to the load,—said cables being attached to the load at a plurality of spaced points, means for operating one cable independently of another to tilt the load attached thereto and a longitudinally movable bar having means for providing a universal connection with the load whereby to permit the load to be tilted and to move the load out of plumb with respect to the suspension point of the boom.

3. In a suspension and hoisting mechanism for power hammers the combination with a rotatable platform, of a hoisting mechanism on said platform, a boom extending from the platform, a power hammer, a plurality of cables leading from the hoisting mechanism to and depending from the boom said cables being attached to the hammer at separated points, means for manipulating the cables to effect a tilting of the hammer and a hammer-stick pivotally connected to the hammer for moving the latter to a position out of plumb beneath the boom.

4. In a load suspension and hoisting mechanism the combination with a hoisting means, of a plurality of separate suspension members operated by the hoisting mechanism for engaging the load at at least three points all of which points are spaced and located around the longitudinal axis of the load and means located between the hoisting mechanism and the suspended load for placing more of the load on one suspension device than another to cause the load to tilt in one direction or another in any degree of a complete circle.

5. In a load suspension and hoisting mechanism the combination with a hoisting means, of a swinging member, a plurality of separate flexible suspension members connected with the hoisting means and guided by said swinging member said separate flexible suspension members engaging the load at at least three points around and spaced from the longitudinal axis of the load, means for moving the swinging member to change the vertical pendant position of the load and means for varying the tension of the suspension members independent of each other while engaged with the load to effect a tilting of said load and throw the longitudinal axis of the load to an inclined position in any degree of a complete circle.

6. In a load suspension and hoisting mechanism the combination with a hoisting mechanism, of a boom, a plurality of separate suspension cables operated by the hoisting mechanism and directed by the boom to the load,—all of said separate suspension cables being attached to the load nearer one end than the other thereof and at a plurality of points spaced from and around the longitudinal axis of the load and means for actuating one suspension cable at one side of said end independently of another at the same end to tilt the suspended load and hold the same tilted below the suspension point of the boom.

7. In a load suspension and hoisting mechanism the combination with a hoisting mechanism, of a boom, a plurality of separate suspension cables operated by the hoisting mechanism and directed by the boom to the load,—said separate suspension cables being attached to the load at a plurality of points spaced from and around the longitudinal axis of the load, means for operating one suspension cable independently of another to tilt the load attached thereto and means for shifting the load in either of two directions in the same straight line to one side of a plumb line with respect to the suspension point of the boom.

8. In a load suspension and hoisting mechanism the combination with a hoisting mechanism, of a boom, a plurality of separate suspension cables operated by the hoisting mechanism and directed by the boom to the load,—said separate suspension cables being attached to the load at a plurality of points spaced from and around the longitudinal axis of the load, means for operating one separate cable independently of another to tilt the load attached thereto and a longitudinally movable bar to move the suspended load in either of two directions in the same straight line to a position out of plumb with respect to the suspension point of the boom.

9. In a load suspension and hoisting mechanism the combination with a hoisting mechanism, of a boom, a plurality of separate suspension cables operated by the hoisting mechanism and directed by the boom to the load, a spreader device around the load nearer one end than the other of said load and to which the separate cables are attached whereby to spread the attaching-ends of the cables apart and dispose them around the one end of the load and spaced from the longitudinal axis of the load, and means for actuating one suspension cable independently of others to effect a tilting of the suspended load.

10. In a suspension and hoisting mechanism for power hammers the combination with a power hammer, separate and independent cables for pendantly sustaining the same from a plurality of points spaced from and around the longitudinal axis of the hammer, hoisting means for the cables to raise or lower the hammer and means operating on the cables between the hammer and hoisting means for actuating any one cable independently of another to effect a tilting of the hammer.

11. In a suspension and hoisting mechanism for power hammers the combination with a hoisting mechanism, of a boom, a plurality of separate suspension cables leading from the hoisting mechanism to and depending from the boom, a power hammer sustained

at at least three points around the longitudinal axis by the separate suspension cables and means for varying the tension of the cables to change the relative position of their hammer-carrying ends and effect a tilting of the hammer.

12. In a suspension and hoisting mechanism for power hammers the combination with a hoisting mechanism, of a boom, a plurality of cables leading from the hoisting mechanism to and depending from the boom, a power hammer sustained at at least three spaced points from and around its longitudinal axis by the separate suspension cables, means for tilting the hammer by a manipulation of suspension cables and means having a universal-joint connection with the hammer for moving the latter beyond the suspension point of the boom.

13. In a suspension and hoisting mechanism for power hammers the combination with a hoisting mechanism, of a pivoted boom, a series of separate and independent suspension cables leading from the hoisting mechanism and guided by and depending from the boom, a power hammer pendantly suspended by the cables below the boom,—the cables being attached to the hammer at spaced points around the longitudinal axis of the hammer, means for manipulating the suspension cables whereby to tilt the hammer and reciprocating means attached to the hammer for swinging the latter in either of two directions in the same straight line and out of plumb with respect to the suspension point of the boom.

14. In a hammer suspension mechanism, the combination with a power hammer, of a hoisting mechanism, a boom, a plurality of cables directed by the boom and attached to the hammer at points spaced from and around the longitudinal axis of the hammer, and a reciprocable bar engaging the hammer to move the latter with respect to the suspension point of the boom.

In testimony whereof I affix my signature.

JAMES REANEY.