US 20030142068A1

(19) United States

(12) Patent Application Publication (10) Pub. No.: US 2003/0142068 A1

DeLuca et al. (43) Pub. Date: Jul. 31, 2003

(54) SELECTIVE REAL IMAGE OBSTRUCTION IN A VIRTUAL REALITY DISPLAY APPARATUS AND METHOD

(76) Inventors: **Michael J. DeLuca**, Boca Raton, FL (US); **Joan S. DeLuca**, Boca Raton, FL (US)

Correspondence Address:
MICHAEL J. DELUCA, JOAN S. DELUCA
734 CAMINO GARDENS LANE
BOCA RATON, FL 33432 (US)

(21) Appl. No.: **10/339,090**

(22) Filed: **Jan. 9, 2003**

Related U.S. Application Data

(60) Division of application No. 09/494,976, filed on Jan. 31, 2000, now Pat. No. 6,559,813, which is a continuation-in-part of application No. 09/108,814, filed on Jul. 1, 1998, now Pat. No. 6,064,354.

Publication Classification

(51) **Int. Cl.**[7] **G09G 5/00**

(52) **U.S. Cl.** **345/156**

(57) **ABSTRACT**

A virtual reality system (**200-322**) stereoscopically projects a virtual reality images including a three dimensional image (**245**) having an interface image (**250'**) in a space observable by a user (**100**). The display system includes a substantially transparent display means (**200**) which also allows real images of real objects (**850**) to be combined or superimposed with the virtual reality images. Selective areas or characteristics of the real images are obstructed by a selective real image obstructer (**860**) to enhance viewing of selected virtual reality images while providing for viewing or real images or virtual images combined with real images in other viewing areas. The display system includes either a stereoscopic headset display system or a heads-up display system. The selective real images obstructer is a gray scale liquid crystal display included with the display system providing for adjustment of the size, shape and/or transparency of the obstruction of real images. The obstruction of real images may be adjusted in response to information for generating the virtual image, manual inputs or processing of real images by video cameras (**310'** and **320'**). Other selective real image obstructions include filtering a portion of the spectrum of visible light associated with the real images.

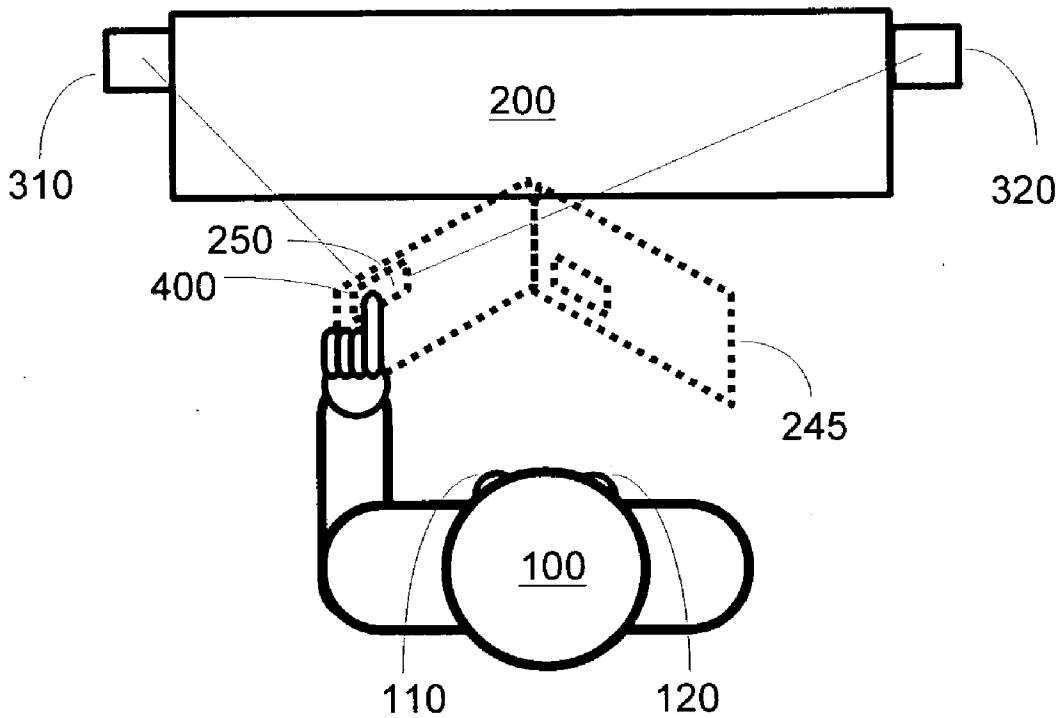

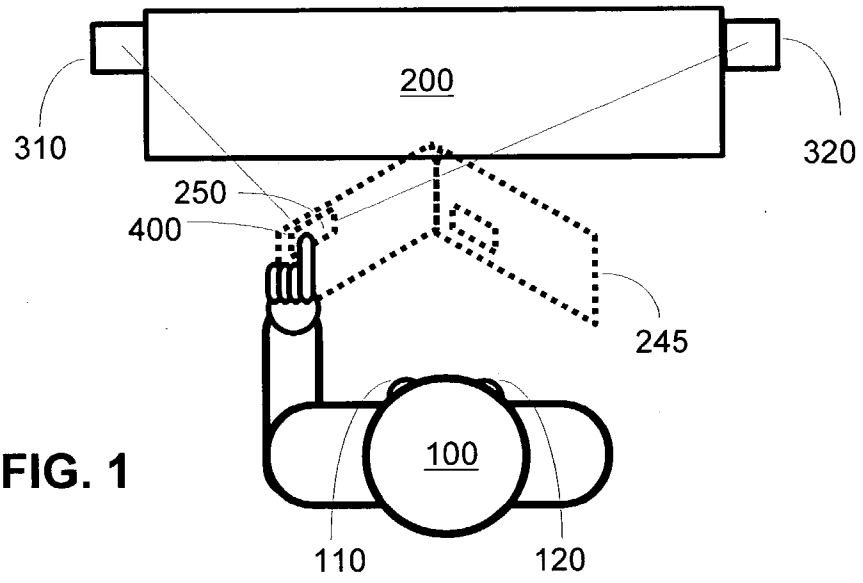

FIG. 1

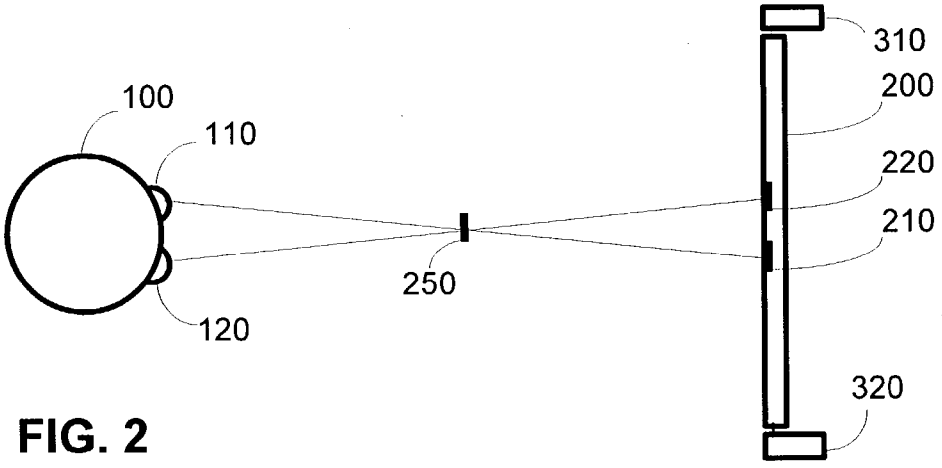

FIG. 2

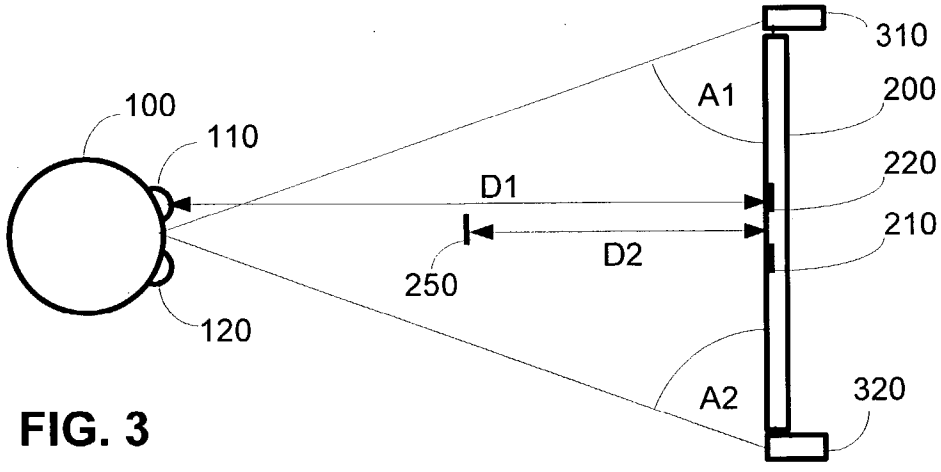

FIG. 3

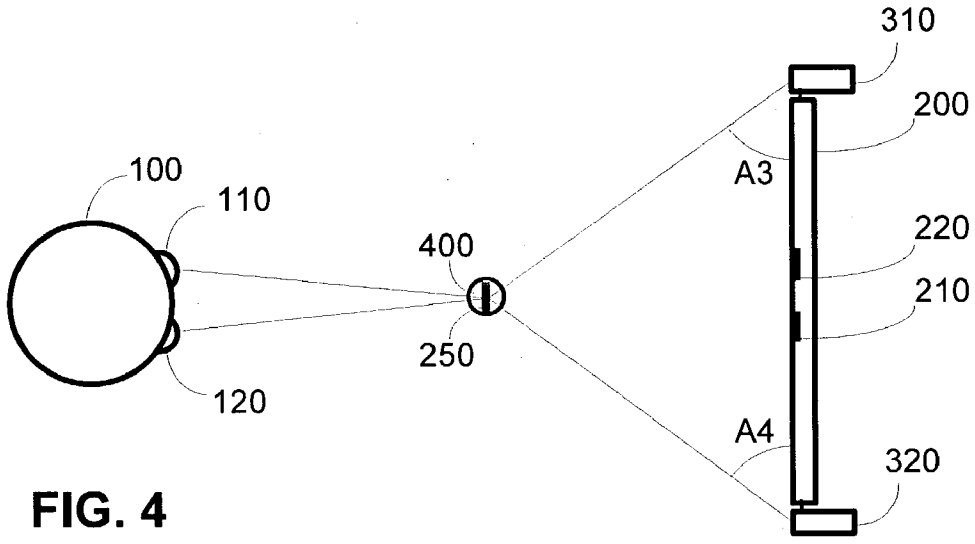

FIG. 4

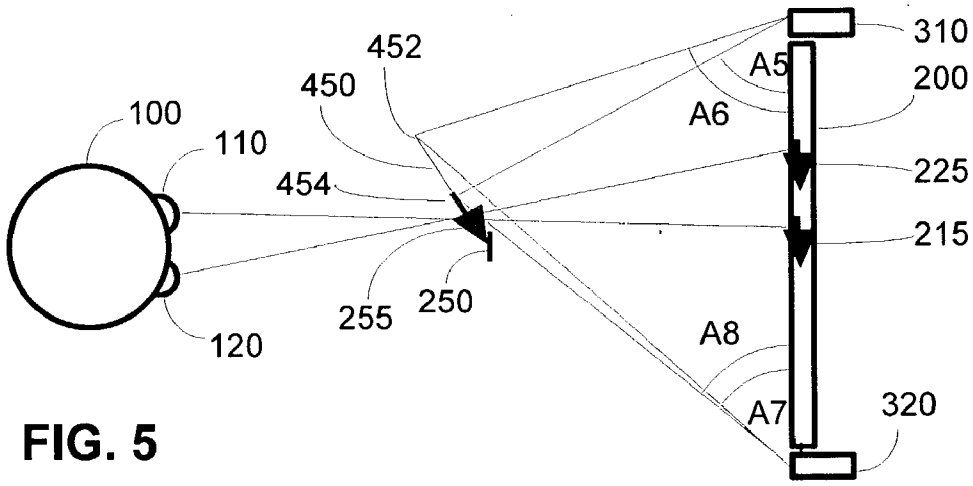

FIG. 5

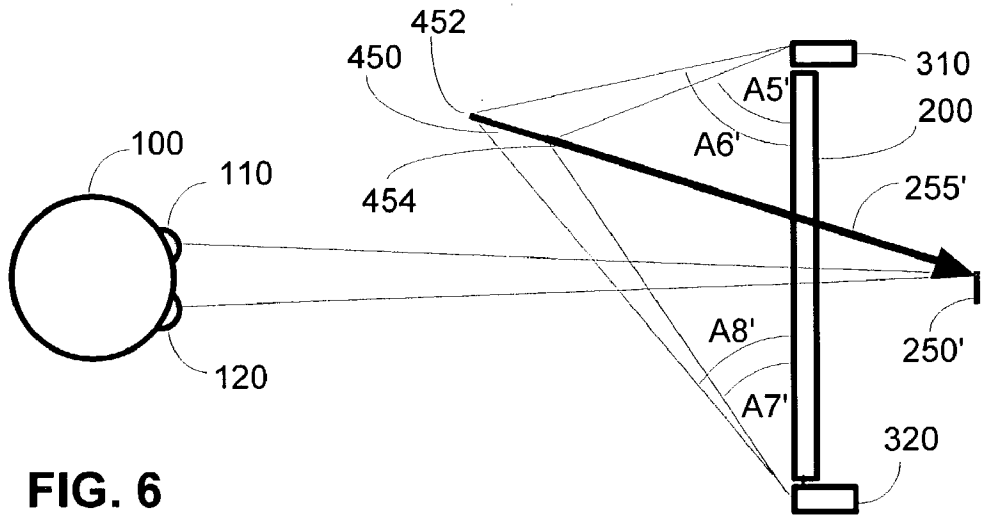

FIG. 6

FIG. 7

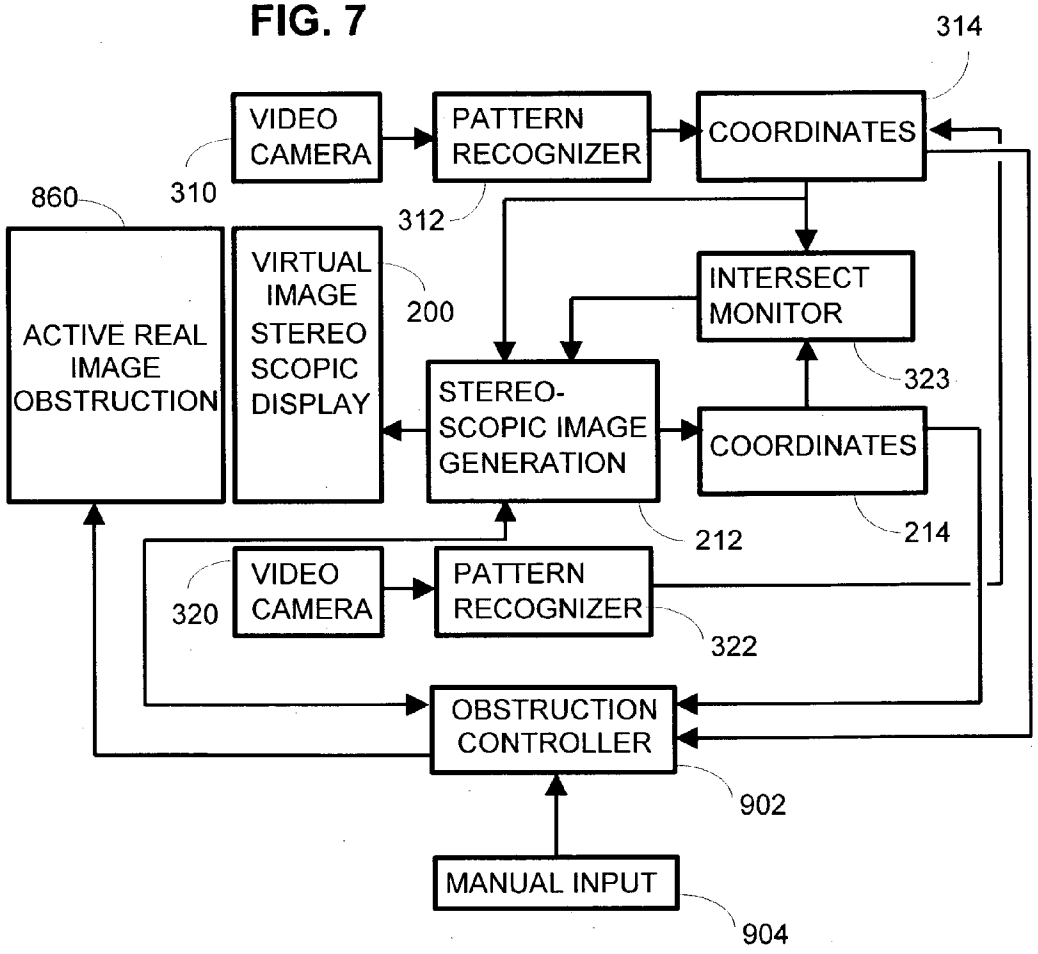
314
VIDEO CAMERA
PATTERN RECOGNIZER
COORDINATES
310
312
860
ACTIVE REAL IMAGE OBSTRUCTION
VIRTUAL IMAGE STEREO SCOPIC DISPLAY
200
INTERSECT MONITOR
323
STEREO-SCOPIC IMAGE GENERATION
COORDINATES
212
214
320
VIDEO CAMERA
PATTERN RECOGNIZER
322
OBSTRUCTION CONTROLLER
902
MANUAL INPUT
904

FIG. 8

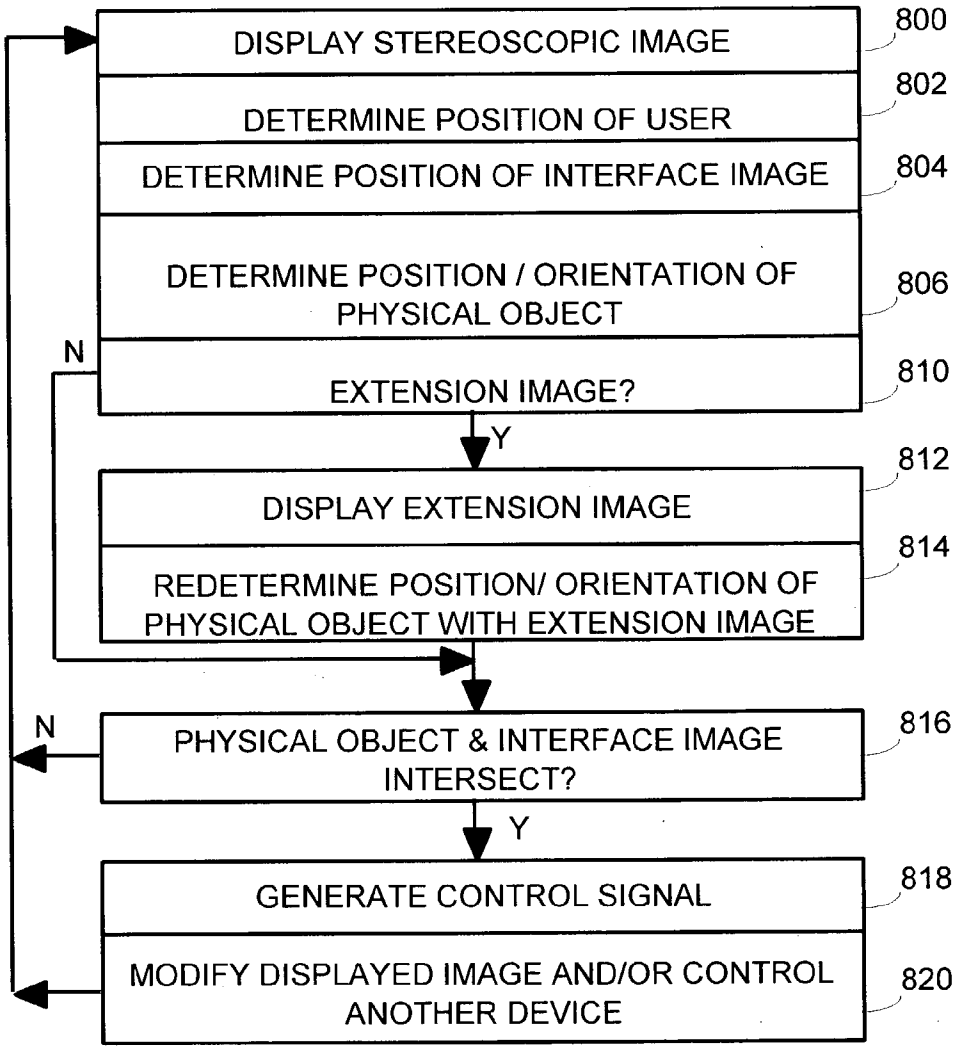
DISPLAY STEREOSCOPIC IMAGE
800
DETERMINE POSITION OF USER
802
DETERMINE POSITION OF INTERFACE IMAGE
804
DETERMINE POSITION / ORIENTATION OF PHYSICAL OBJECT
806
N
EXTENSION IMAGE?
810
Y
DISPLAY EXTENSION IMAGE
812
REDETERMINE POSITION/ ORIENTATION OF PHYSICAL OBJECT WITH EXTENSION IMAGE
814
N
PHYSICAL OBJECT & INTERFACE IMAGE INTERSECT?
816
Y
GENERATE CONTROL SIGNAL
818
MODIFY DISPLAYED IMAGE AND/OR CONTROL ANOTHER DEVICE
820

FIG. 9

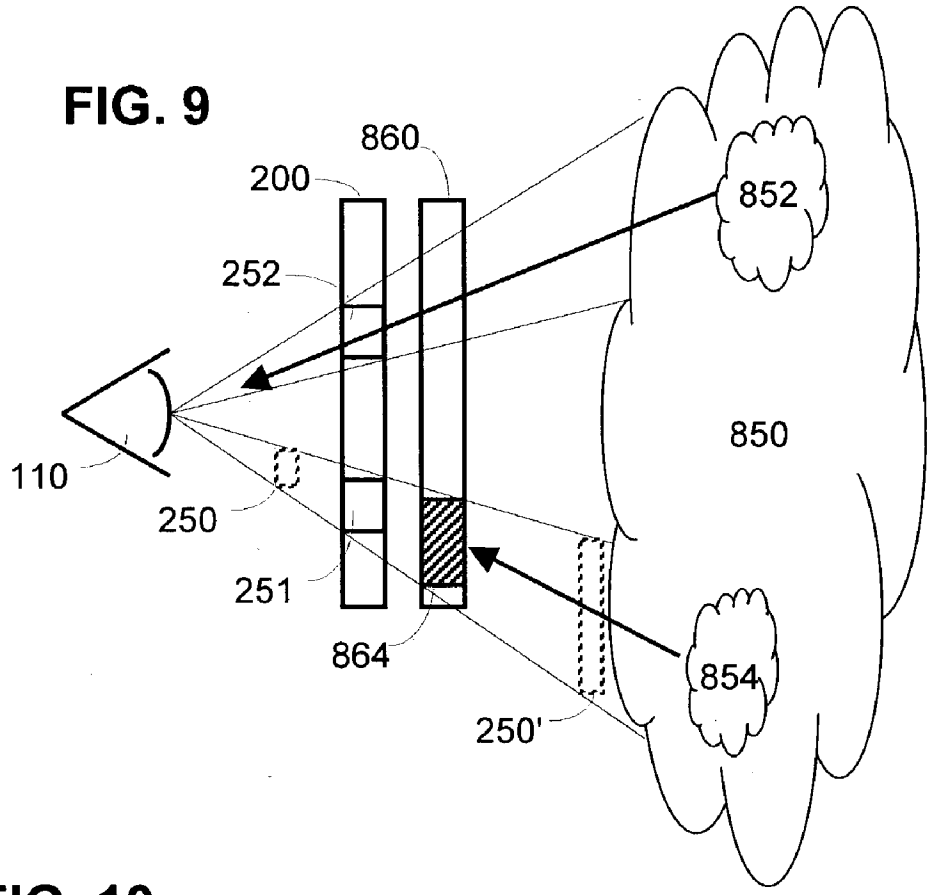
860
200
852
252
850
110
250
251
864
854
250'

FIG. 10

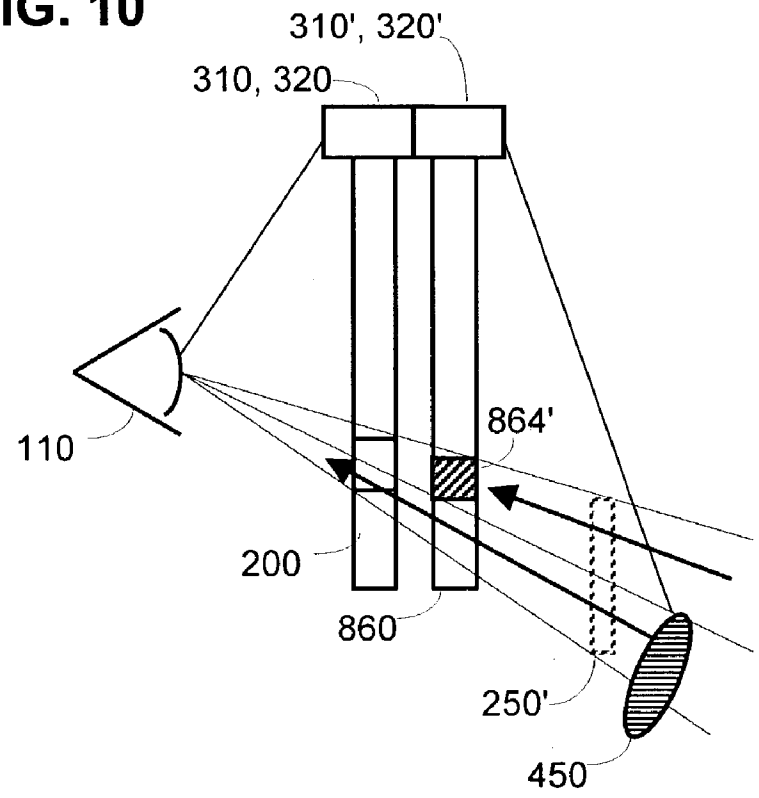
310', 320'
310, 320
110
864'
200
860
250'
450

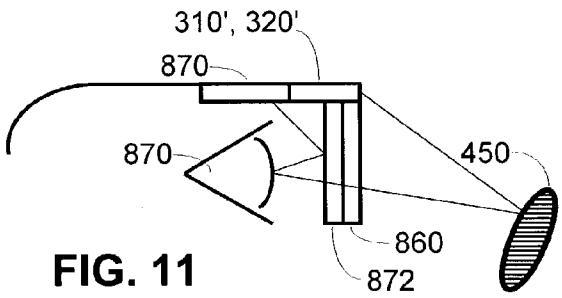

FIG. 11

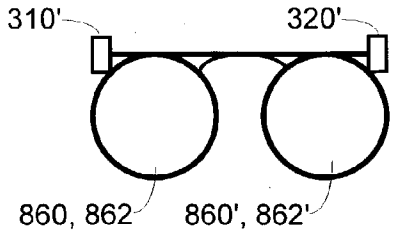

FIG. 12

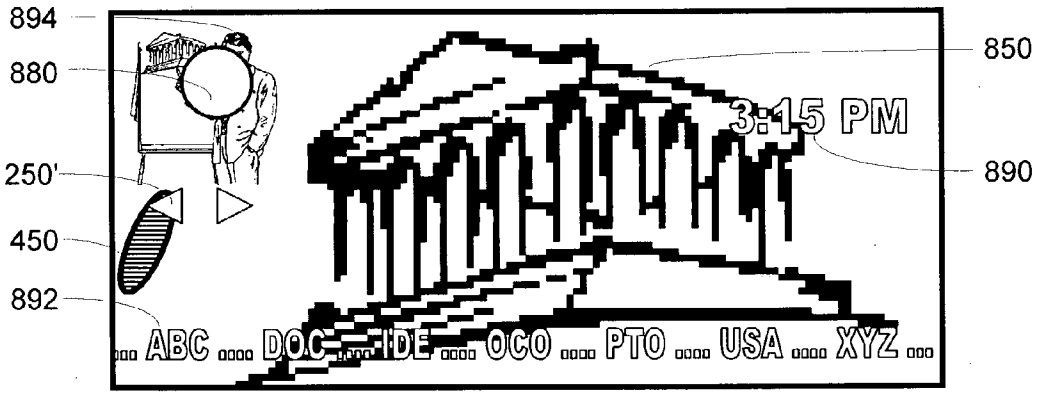

FIG. 14

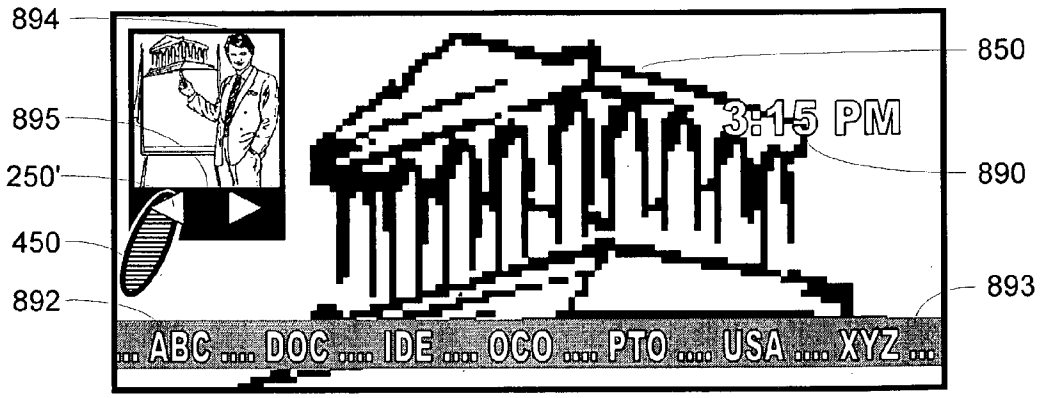

FIG. 15

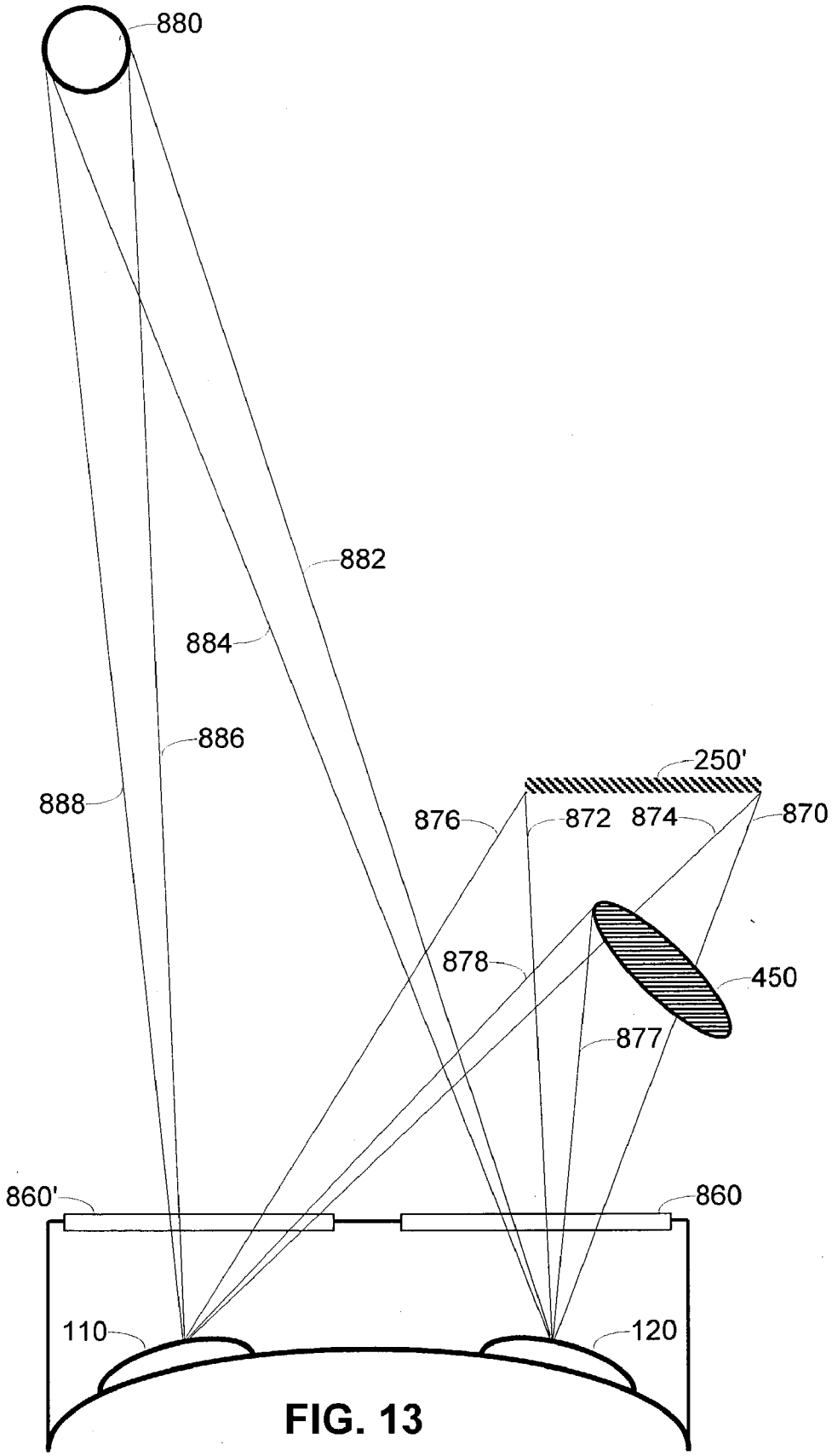
880
882
884
886
888
250'
876
872
874
870
878
450
877
860'
860
110
120

FIG. 13

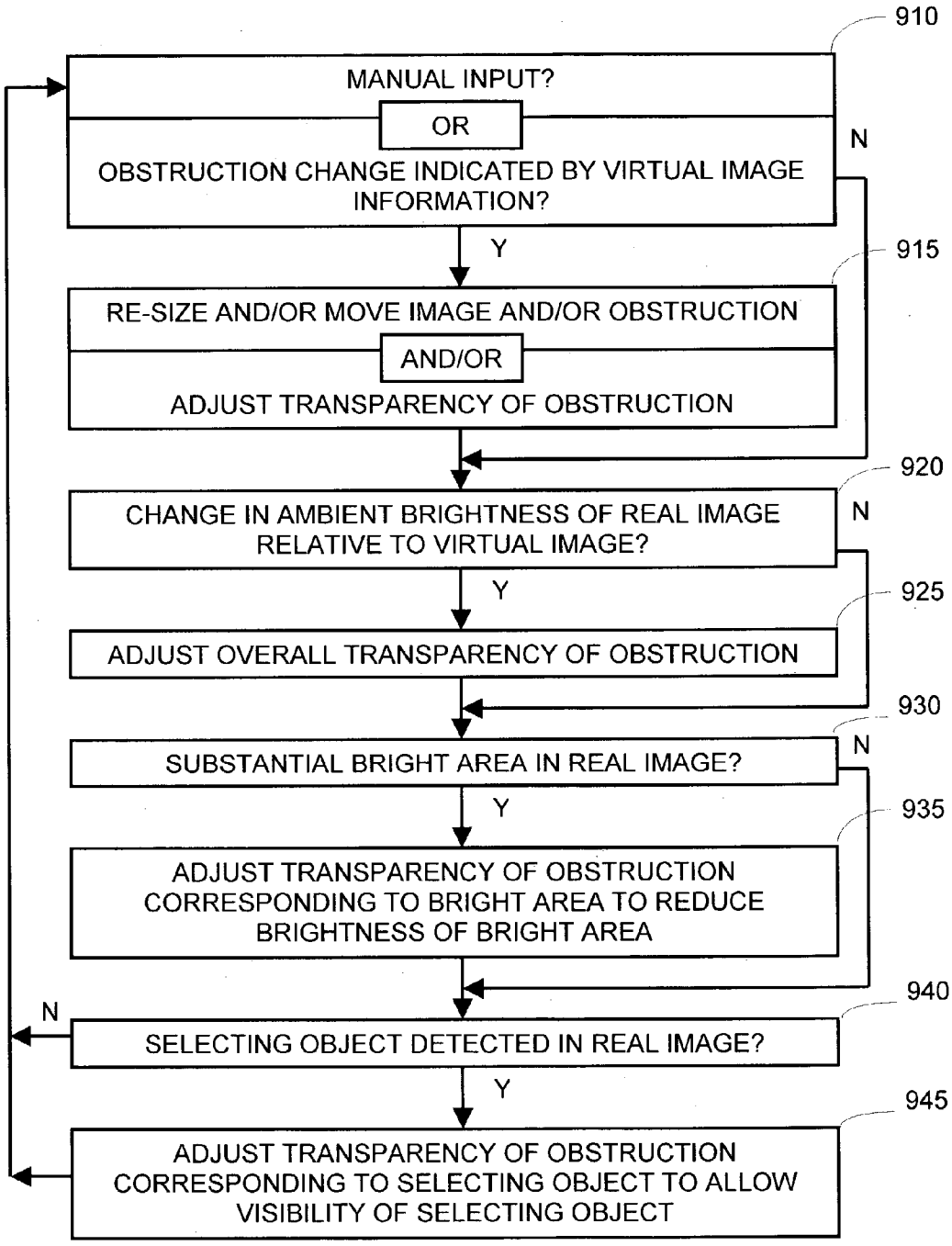
910
MANUAL INPUT?
OR
OBSTRUCTION CHANGE INDICATED BY VIRTUAL IMAGE INFORMATION?
N
Y
915
RE-SIZE AND/OR MOVE IMAGE AND/OR OBSTRUCTION
AND/OR
ADJUST TRANSPARENCY OF OBSTRUCTION
920
CHANGE IN AMBIENT BRIGHTNESS OF REAL IMAGE RELATIVE TO VIRTUAL IMAGE?
N
Y
925
ADJUST OVERALL TRANSPARENCY OF OBSTRUCTION
930
SUBSTANTIAL BRIGHT AREA IN REAL IMAGE?
N
Y
935
ADJUST TRANSPARENCY OF OBSTRUCTION CORRESPONDING TO BRIGHT AREA TO REDUCE BRIGHTNESS OF BRIGHT AREA
940
SELECTING OBJECT DETECTED IN REAL IMAGE?
N
Y
945
ADJUST TRANSPARENCY OF OBSTRUCTION CORRESPONDING TO SELECTING OBJECT TO ALLOW VISIBILITY OF SELECTING OBJECT

FIG. 16

SELECTIVE REAL IMAGE OBSTRUCTION IN A VIRTUAL REALITY DISPLAY APPARATUS AND METHOD

RELATED APPLICATIONS

[0001] This application is a divisional of application Ser. No. 09/464,976 filed Jan. 31, 2000 which is a continuation-in-part of application Ser. No. 09/108,814 filed Jul. 1, 1998 which issued as U.S. Pat. No. 6,064,354 on May 16, 2000.

FIELD OF THE INVENTION

[0002] This invention generally relates to the area of image displays and more particularly to transparent image displays and virtual reality user interfaces.

BACKGROUND OF THE INVENTION

[0003] Graphical user interfaces have become a standard for interfacing between a user and a computer. Such interfaces are in wide use in computer operating system interfaces produced by Apple, Microsoft and others. These interfaces are limited in that they are intended for interfacing between a user and a computer having a two dimensional display such as a CRT or LCD. A user activates the interface with a key board and or a pointing device such as a mouse pointing to an icon on the display. Advancements have been made with the advent of a touch screen which allows a user to approximately contact the icon or intended area of the graphical user interface in order to use the interface. However, contact with the touch screen can contaminate the display area of the screen with finger prints and other types of smudges. Also, constant physical contact with the touch screen can result in its mechanical failure. Thus, what is needed is a way to contact user interface images without contacting a keyboard or a mouse or the display itself.

[0004] Three dimensional image displays are improving. Several types of three dimensional displays are known including stereoscopic displays which display a virtual three dimensional image using filters to highlight images intended for each eye of the viewer, thereby providing a stereoscopic or three dimensional affect. Such systems alternately flash images for the left and right eye of the user and require a filter for each eye, usually included in glasses worn by the viewer. Systems are in public use which require glasses may have color filters, orthogonally polarized lenses, or actively switched lenses, and the display is correspondingly modulated with left and right eye images to provide the three dimensional effect. Furthermore, stereoscopic displays which do not require glasses have been described, descriptions are included in U.S. Pat. No. 4,987,487, Jan. 22, 1991, to Ichinose et al. entitled Method of stereoscopic images display which compensates electronically for viewer head movement, and U.S. Pat. No. 5,365,370, Nov. 15, 1994, to Hudgins entitled Three dimensional viewing illusion with 2D display. Yet another stereoscopic display system in completely contained in a head set worn apparatus as described in U.S. Pat. No. 5,673,151 Sep. 30, 1997 to Dennis entitled Image correction in a virtual reality and heads up display. The aforesaid patents are incorporated by reference. The aforesaid stereoscopic displays allow the viewer to simultaneously observe both a stereoscopic object, appearing to be generally set apart in three dimensions from the image projection means, and a physical object, such as the hand of the user, in approximately the same perceived space. What is needed is a method and apparatus by which the intersection of the physical object and the stereoscopic object can form a user interface with a computer system.

[0005] Stereoscopic headsets are capable of generating independent images for each eye and thus provide a three-dimensional virtual reality image for the viewer. Such headsets have the advantage of providing the experience of a substantially large display system, such as a movie theater screen, at a significantly reduced price and in a substantially small area. Some headsets are opaque while others are transparent. Opaque headsets entirely block the user's view of real images normally observable when a headset is not worn. Opaque headsets have the advantage of enhancing the virtual reality image but the disadvantage of preventing the viewer from observing real images. The inability of the observer to view real images while wearing the headsets inhibits most normal social functions such as walking or having a normal conversation with others in observer's vicinity. On the other hand, transparent headsets allows the observer to see both real images and virtual reality images projected by the headset, the virtual reality images appearing superimposed upon reality's real images. This has the advantage of allowing the user to view reality while wearing such a headset, thus enabling the user to conduct most normal social functions such as walking or carrying on a normal conversation. However, the quality of the virtual reality image may be compromised when superimposed upon real images because the real images may distract the user from the content of the virtual reality image, thus detracting from the virtual reality experience.

[0006] Thus, what is needed is a virtual reality viewing system that provides for the advantages of both transparent and opaque viewing systems while reducing the disadvantages of both.

OBJECT OF THE INVENTION

[0007] It is therefor an object of the invention to provide a three dimensional display system capable of determining an intersection of a physical object with a three dimensionally displayed object in a space where the three dimensional object is viewed and generating a control signal in response thereto. The control signal may cause modification of the displayed image or control another device. The display system is also capable of extending the physical object with a three dimensional extension image and then using the extended image to determine the intersection.

[0008] It is another object of the present invention to provide a transparent display system for viewing real objects beyond the display which actively obstructs transparency to enhance viewing of displayed virtual images and real images viewable through the display.

BRIEF DESCRIPTION OF THE DRAWINGS

[0009] **FIG. 1** shows a perspective view of a user causing an intersection of a physical object with a three dimensional stereoscopic object projected by a display.

[0010] **FIG. 2** shows the display of the stereoscopic interface image.

[0011] **FIG. 3** shows determination of the position of the stereoscopic interface image.

[0012] **FIG. 4** shows a physical object intersecting the stereoscopic interface image.

[0013] **FIG. 5** shows a stereoscopic extension of the physical object intersecting the stereoscopic interface image.

[0014] **FIG. 6** shows a stereoscopic extension image of the physical object intersecting the stereoscopic interface image wherein the intersection is behind the display.

[0015] **FIG. 7** shows a block diagram of the user interface system operating in accordance with the present invention.

[0016] **FIG. 8** shows a flow chart of a process operating in accordance with the present invention.

[0017] **FIG. 9** shows active real image obstruction in a virtual reality display system.

[0018] **FIG. 10** shows selective real image obstruction in the virtual reality display system.

[0019] **FIG. 11** shows a headset embodiment of the present invention.

[0020] **FIG. 12** shows a front view of the headset embodiment of the present invention.

[0021] **FIG. 13** shows a top view operation of a headset with active reality obstruction.

[0022] **FIG. 14** shows an example of a view of a transparent display system without real image obstruction.

[0023] **FIG. 15** shows an example view of the transparent display system with real image obstruction.

[0024] **FIG. 16** shows a flowchart of a method operating in accordance with the present invention.

DETAILED DESCRIPTION OF THE INVENTION

[0025] **FIG. 1** shows a perspective view of a user causing an intersection of a physical object with a three dimensional stereoscopic object projected by a display. The user **100** has left and right eyes **110** and **120** which are used to view a display **200** which projects a three dimensional stereoscopic object **245** in a space between the user and the display. The stereoscopic object has a stereoscopic interface image **250**. Using pattern recognition and triangulation, images from video cameras **310** and **320** are used to determine the position of physical objects within the space, such as the position of the user **100** and the user's finger **400**. As will be described herein, a control signal is generated in response to the intersection of the interface image **250** and a physical object **400**. For example, the stereoscopic object **245** projected by the display **200** could be the image of an open book, including readable text on pages of the book. Interface image **250** could be an icon indicating that contact with the icon would cause a page in the book to turn. When the finger tip **400** of the user touches the icon **250**, a control signal is generated causing a new image **245** of a book to be displayed with a turned page. The stereoscopic three dimensional image has the advantage of being projected in a space, no physical contact with a keyboard, mouse or touch screen is needed to generate a control signal to turn a page of the book. Rather, an intuitive action of a user appearing to make physical contact with a three dimensional image in the space causes generation of the control signal. The user sees the interface image in a three dimensional space and simply uses a finger to touch the interface image to cause a response. The user has an actual view of the finger, with which the user has had a life time to become familiar, touching a virtual stereoscopic object similar to the way the user has spent a life time touching physical objects. This provides for an intuitive interface.

[0026] The stereoscopic projector **200** can be any of several display means capable of displaying three dimensional images. Some projectors require the user to wear colored, polarized of active image filter glasses (not shown) to observe the three dimensional image while others are totally contained within a display headset worn by the user, yet another requires only a display separate from the user and no glasses at all. While all displays capable of displaying a three dimensional image are contemplated, the latter is preferred because of the convenience to a user requiring no physical contact with the means necessary to display three dimensional images.

[0027] **FIG. 2** shows the display of the stereoscopic interface image. Display **200** displays an image **210** for viewing by the left eye **110** of the user **100** while image **220** displayed for viewing by the right eye **120** of user **100**. As a result, stereoscopic interface image **250** appears to occur in a space between the user **100** and the display **200** at a position indicated by the intersection of a line from eye **110** to image **210** and a second line from eye **120** to image **220**.

[0028] **FIG. 3** shows determination of the position of the stereoscopic interface image. The position is dependent upon the distance between images **210** and **220**, the distance between the eyes **110** and **120** of the user **100** and the position of the user including distance D1 between the display **200** and the user. Preferably, the size of display **200** is predetermined and the image **250** is determined by the computer generating the image. Consequently the distance between images **210** and **220** is also predetermined. The distance between the eyes **110** and **120** can be entered by the user as a calibration procedure prior to operating the user interface means, or can be determined by pattern recognition from images recorded by cameras **310** and **320**. The position of the user including the distance between the user and the display can determined by pattern recognition by the images recorded by cameras **310** and **320** to determine a common point relative to the user. Pattern recognition of images of faces and other physical objects are well known, such descriptions can be found in references including U.S. Pat. No. 5,680,481 Oct. 21, 1997 to Prasad et al. entitled Facial feature extraction method and apparatus for a neural network acoustic and visual speech recognition system, U.S. Pat. No. 5,715,325 Feb. 3, 1998 to Bang et al. entitled Apparatus and method for detecting a face in a video image, and U.S. Pat. No. 5,719,951 Feb. 17, 1998 to Shackeleton et al. entitled Normalized image feature processing, which are hereby incorporated by reference. The common point may be the area between the eyes of the user. Alternately, the identification of the common point may be simplified by adding a fiducial mark at the desired point to assist in identifying the desired point and its corresponding angle. Such a mark could be a colored dot placed between the eyes or at the tip of the nose, or marks on glasses worn by the user, the mark could be further illuminated to simplify patter recognition of images received by the video camera. Thereafter, triangulation is performed to determine the position of the user including D1. D1 is a geometric solution of a

predetermined distance between cameras **310** and **320** angles A1 and A2 found from images recorded by cameras **310** and **320**. Thus, the position including D2 of interface image **250** is readily geometrically determined from the aforesaid determinations. It should be appreciated that the three dimensional display means can be constructed such that the position of the user and the distance D1 is predetermined in order for the user to correctly view the stereoscopic effect. Furthermore, the distance between the eyes **110** and **120** can also be predetermined to be an average distance between eyes of a number of users. This simplifies determination of the position of interface image **250** without departing from the spirit and scope of the invention. **FIG. 3** shows determining the position of interface image **250** from a top view, it should be appreciated that a similar analysis applies to determining the position of interface image **250** from a side view, thus providing a three dimensional position of the user **100** and the interface image **250**.

[**0029**] **FIG. 4** shows a physical object intersecting the stereoscopic interface image. Physical object **400** can be any physical object where the position of the object can be determined. In **FIG. 1**, the physical object corresponds to the tip of the finger of the user. Pattern recognition is used to determine the position of the physical object and the tip of the finger of the user. Alternately a fiducial mark such as the aforementioned colored or illuminated dot may be added to assist pattern recognition. Once the desired point is identified from the images recorded by cameras **310** and **320**, angles A3 and A4 may be determined. Given angles A3 and A4, and the predetermined distance between cameras **310** and **320**, the position of the physical object **400** may be geometrically determined. **FIG. 4** shows determining the position of the physical object from a top view, it should be appreciated that a similar analysis applies to determining the position of the physical object from a side view, thus providing a three dimensional position of physical object **400**. Upon determination of a substantial intersection of the position of interface image **250** and physical object **400**, a control signal is generated. The control signal may result in the modifications of the image or the control another device such as a printer or modem.

[**0030**] **FIG. 4** shows a computer system which stereoscopically projects a three dimensional object having an interface image in a space observable by a user. The user controls the movement of a physical object within the space while observing both the three dimensionally projected object and the physical object. The computer system monitors the position of the user to determine the position of the interface image within the space and further monitors the movement of the physical object to determine its position. A control signal is generated in response to the position of the physical object intersecting the position of the interface image. For example, a word processing program is indicated by an interface image such as an icon including the letter "W" three dimensionally projected within the space. The word processing program is activated when the user's finger moves within the space to touch the projected icon. The interface allows the user to observe the projected icon, physical finger and their intersection within the space.

[**0031**] **FIG. 5** shows a stereoscopic extension of the physical object intersecting the stereoscopic interface image. In this alternative embodiment, the physical object is shown as a bar **450** having a first and second end **452** and **454** with a stereoscopic extension image **255** projecting from end **454**. The orientation and position of the physical object is determined by determining the positions of end points **452** and **454** from images recorded by cameras **310** and **320**. The end points can be found by pattern recognition or by adding of differing colored fiducial marks at either end of the bar. The position of end point **452** may be determined from angles A6 and A8 of images from cameras **310** and **320** respectively while the position of end point **454** may be determined from angles A5 and A7 from cameras **310** and **320** respectively. **FIG. 5** shows determining the position of the end points from a top view, it should be appreciated that a similar analysis applies to determining the position of the end points from a side view, thus providing a three dimensional position of end points **452** and **454**. From the position of the two end points, the orientation of the physical object **450** may be determined. In response to the determined position and orientation of physical object **450** and the determined position of user **100**, a stereoscopic extension image **255** is created such that the extension image appears to be an extension of the physical object. In **FIG. 5**, the extension image **255** is shown as a line extending along the line of physical object **450** with an arrow head tip. The length and shape of the extension image is predetermined and may vary from application to application. The stereoscopic extension image **255** is created by displaying images **215** and **225** on display **200** for view by eyes **110** and **120** respectively. A control signal is generated when the position of a predetermined portion of the stereoscopic extension image, such as the tip of the arrow head, intersects the position of the stereoscopic interface image.

[**0032**] **FIG. 6** shows a stereoscopic extension image of the physical object intersecting the stereoscopic interface image wherein the intersection is behind the display **200**. **FIG. 6** is similar to **FIG. 5** in that both show a stereoscopic extension image, **255** and **255'**, intersecting a stereoscopic interface image, **250** and **250'**. However in **FIG. 5** the intersection is in front of display **200**, while in **FIG. 6** the intersection is behind display **200**. The position and orientation of physical object **450** is determined by determining the position of end points **452** and **454** via cameras **310** and **320** and angles A5', A6', A7' and A8'. In this case the resulting extension image **255'** is shown to have a substantially longer predetermined length than image **255** of **FIG. 5**. If display **200** were not a heads-up stereoscopic display, but rather a conventional LCD or CRT, then the intersection between a physical object and an interface image could not occur if the position of the interface image were behind the display because either the space is physically occupied by another object or the user could not see the physical intersection through the display. The extension image has the advantage of enabling intersections to occur in positions appearing behind the display **200**, or in other positions out of reach of the user, while allowing the user to directly view the physical object used to cause the intersection.

[**0033**] Physical object **450** has been referred to as a bar, but it should be appreciated that the physical object could be any of a number of physical objects including the finger of the user where one end is the finger tip and the other end is a joint of the finger. Fiducial marks could be added to the points on the finger to facilitate pattern recognition of images recorded by the cameras. While the extension image is shown as a line with an arrow head, other types of extension images may be used depending upon the applica-

tion. The stereoscopic extension may be considered a virtual end effect for a physical handle, a wide variety of end effects may be created by the computer system. For example a paint brush could be used for paining a virtual object, the handle being the physical object and the brush bristles and paint color the being end effect while the interface image appears as a paint canvas mounted on and three dimensional easel image. In a medical application, the physical object could be the handle and the end effect extension image the blade of a scalpel while the stereoscopic interface image part of a three dimensional image simulating surgery. Alternately in a game application the stereoscopic extension image could be a laser beam, rocket, bullet or bolt of lightning appearing to emanate from the finger of the user along a three dimensional vector defined by the finger, the stereoscopic interface image may be a villain or enemy tank moving in three dimensions.

[0034] It should also be appreciated that the position and orientation of the user **100** and physical object **450** have been described as being determined by two cameras with pattern recognition which triangulate in order to determine the corresponding position and orientation. In a heads up stereoscopic head set display, the cameras could be preferably mounted on the head set for visually monitoring physical objects in same space in which the user observes the projected stereoscopic images. In alternate embodiments other techniques may be used to determine the aforesaid positions and orientations without departing from the spirit and scope of the invention.

[0035] **FIG. 7** shows a block diagram of the user interface system operating in accordance with the present invention. A stereoscopic display **200** displays stereoscopic images generated by stereoscopic image generation means **212** in a manner know in the art. The stereoscopic display may be a CRT or LCD screen requiring filter glasses to be worn by the user to direct the appropriate image to the corresponding eye of the user. Alternately, it may be a heads up stereoscopic display worn by the user. Preferably display **200** is a display means especially adapted to displaying stereoscopic images without the aid of devices worn by the use. Cameras **310** and **320** produce images which are analyzed by pattern recognizers **312** and **322** which identify certain points of the image and their location within the image. As previously described, the pattern recognition may be performed with or without the aid of fiducial marks. The location of the points from pattern recognizers **312** and **322** are analyzed by coordinate determining means **314** which analyzes the angles relative to each point from each camera, and knowing the predetermined distance between the cameras, is able to determine the desired positions and orientations. Coordinate determining means **314** also makes available the position of the user and the position and orientation of the physical object so that the stereoscopic image generator **212** may generate the stereoscopic extension image in response thereto. Coordinate determining means **314** also makes available the position of the user to coordinate determining means **214** which determines the position of the interface image relative to the user by determining the distance between the left eye and right eye images displayed on display **200** with the user's position including the distance between the user and the display and the spacing between the eyes of the user. The positions of the physical object and interface image are then compared by intersection monitor **322** which generates a control signal in response to a substantial coincidence with the position of the physical object, or its stereoscopic extension image, and the position of the stereoscopic interface image.

[0036] **FIG. 8** shows a flow chart of a process operating in accordance with the present invention. In step **800**, a stereoscopic image is displayed. Step **802** determines the position of the user as previously described. Note in alternate embodiments the position of the user may be predetermined. Then in step **804** the position of the stereoscopic interface image relative to the user is determined. Step **806** determines the position and orientation of the physical object and step **810** asks if and extension image is desired. If so, step **812** causes the display of the extension image and step **814** redetermines the position and orientation of the physical object with the extension image. Then step **816** determines if there is an intersection between the interface image and the physical object or its extension image. If so, step **818** generates a control signal which in step **820** modifies the displayed image and/or controls another device.

[0037] Thus what has been provided is a method and apparatus by which the intersection of a physical object and a stereoscopic object can be determined and be used to form a user interface with a computer system.

[0038] **FIG. 9** shows active real image obstruction in a virtual reality display system. Display means **200** is a transparent display means preferably capable of displaying a stereoscopic image **250** appearing in front of the display means or stereoscopic image **250'** appearing behind the display means. Alternately, an image **251** or **252** could appear in coincidence with the display if a non-stereoscopic display were implemented, such non-stereoscopic virtual reality images are produced by displays including "teleprompters". Image **252** could alternately be a stereoscopic image if display **200** were a stereoscopic display. Images produced by display **200** correspond to virtual reality images when viewed by the user. Reality also has numerous real images including real images **850** having portion **852** and **854** corresponding to images normally observable by an observer with the naked eye **110**.

[0039] The transparency of display **200** allows the virtual reality images to appear superimposed upon real images represented by reality **850**. Such a system is shown in U.S. Pat. No. 5,491,510 to Gove entitled System and method for simultaneously viewing a scene and an obstructed object, or U.S. Pat. No. 5,694,142 to Dumoulin et al. entitled Interactive digital arrow (D'ARROW) three-dimensional (3D) pointing, which are hereby incorporated by reference. Thus, virtual image **252** appears superimposed upon real image **852**.

[0040] The invention also includes an active real image obstructer, or real image obstruction means, **860**. The active real image obstructer modifies the transparency of portions of the viewing system. The active reality obstructer preferably includes a multiplicity of individually addressable and electronically controlled light valves, and preferably includes a gray scale liquid crystal display (LCD) having pixels capable of electronically switching between substantially transparent, partially transparent and substantially opaque states. Such LCDs are know to those familiar with the art. The result is the selective obstruction of real images **850**. For example, obstructer **860** has a portion **864** where light valves substantially inhibit viewing of real images **854**.

In addition to image **252**, display **200** also displays image **250**, **250'** or **251**. The resulting display system results in a view wherein virtual image **252** appears superimposed upon or combined with real image **852**, while virtual image **250**, **250'** or **251** appears on a substantially opaque background. An opaque area **864** is formed by light valves of the obstructer inhibiting viewing of real images **854**. Thus, real images **854** do not interfere with the viewing of virtual image **250**, **250'** or **251**. This enhances the viewing of virtual reality image **250**, **250'** or **251** by provide a "dark background" background free of real images **854**, while enabling virtual reality image **252** to be viewed along with real image **852**.

[**0041**] **FIG. 10** shows selective real image obstruction in the virtual reality display system. As discussed with respect to previous figures, video cameras **310** and **320** determine the position of the viewer in order to determine the position of the perceived virtual reality image **250'**. The transparency of display **200** allows viewing of an image of real physical object **450**. Since object **450** is on the opposite side of the display system, a second set of video cameras **310'** and **320'** are used to determine the position of selecting object **450**. In response to determining the position of object **450**, real image obstruction **864'** is modified to enable viewing of selector **450** so that both the real image of object **450** and virtual image **250'** may be both viewed by the viewer.

[**0042**] In an embodiment including a stereoscopic user interface system, image **250'** has an interface image, and object **450** corresponds to selecting device, such as a finger of the user. Real image obstruction **864'** is modified to facilitate the user observing the object in order guide the object to a desired interface image. Note that if reality obstruction **864'** of **FIG. 10** were not modified in response to selecting object **450**, the view of selecting object **450** would be obstructed. In the preferred embodiment, selecting object **450** is recognized independently of other real images **854** obstructed by obstruction **864**. The independent recognition of selecting object **450** may be facilitated with the use of fiducial marks on the pointing device such as a ring or colored dots on the finger. Alternately pattern recognition could be performed to identify a predetermined pointing device such as the user's finger. Since the position of the user, the selecting object and display system are all known, sufficient information is available to adjust the reality obstruction **864'** facilitate viewing of the pointing device by the user.

[**0043**] In another embodiment, a "head's up" display includes active reality obstruction. In this embodiment a transparent display is coupled with real image obstructer **860** and place a substantial distance from the viewer in order that the display may be viewed by both eyes of the viewer. The obstructer **860** allows viewing of some of the virtual images projected by the display to combined with real images viewed through the display. For other virtual images, the reality obstructer inhibits viewing real images in other portions of the display in order to enhance viewing of corresponding virtual images or to facilitate better viewing of real images through the display system. In an example of this embodiment, the display system of **FIG. 1** to **FIG. 6** is modified such that display **200** includes a transparent display and obstructer **860** is locate behind the display. Interface image **250** can be further incorporated into the display system to provide for a heads-up stereoscopic user interface.

[**0044**] **FIG. 11** shows a headset embodiment of the present invention. The headset is capable of displaying stereoscopic images with a transparent display projection system. Such a system is shown in U.S. Pat. No. 5,886,822 to Spitzer entitled Image combining system for eyeglasses and face masks, which is hereby incorporated by reference. The display system includes an image projector system **870** and **872**. Images are generated by image generator **870** and reflected into an eye of the viewer by reflector means **872**. When a corresponding system is used with the second eye of the user, a stereoscopic image is generated. Also included is obstructer **860** which obstructs real images in certain parts of the viewing area. Video camera means **310'** is used to monitor real images and adjust the reality obstruction in response thereto. For example, real image obstruction can be modified to enable viewing of selecting object **450**. Since the system is part of a headset, the location of each of the user's eyes is substantially predetermined. As a result video cameras **310** and **320**, which were previously used to determine the location of the user become optional. As previously discussed, the system enables the stereoscopic user interface by facilitating the user's view of the intersection between a real object and a stereoscopic interface image.

[**0045**] **FIG. 12** shows a front view of the headset embodiment of the present invention. Each lens has a virtual reality image projector and a real image obstructer **860** and **872**, and **860'** and **872'** respectively. In the system of **FIG. 11** and **FIG. 12**, the obstruction created by obstructers **860** and **860'** is also stereoscopic, occupying a perceived space a distance in front of the user. In the preferred embodiment, the perceived distance of the obstruction is adjusted to enhance the user's view. For example, if stereoscopic image **250** is projected to appear one half meter in front of the viewer, then the stereoscopic obstruction would also be generated to appear one half meter in front of the viewer in order to enhance the viewing of image. Video cameras **310'** and **320'** monitor real images viewed by the user. This facilitates the stereoscopic user interface by locating a selecting object position as well as facilitates adjusting the real image obstructers in response to real images.

[**0046**] In alternate embodiments, the head set display system of **FIG. 11** or **FIG. 12** can be implemented with filter glass (polarized, colored or actively switched) viewing a common display panel.

[**0047**] **FIG. 13** shows a top view operation of a headset with active reality obstruction. The headset includes reality obstructers **860** and **860'** for obstructing real images viewed by eyes **110** and **120**. A virtual reality image **250'** is projected in a distance in front of the viewer. In order to create a stereoscopic obstruction in coincidence with virtual image **250'**, an obstruction is created substantially between lines **870** and **872** on obstructer **860** and substantially between lines **874** and **876** on obstructer **860'**. Note that since virtual image **450** is created by the display system, its position is inherently known by the display system. Thus, the reality obstruction corresponding to virtual image **250'** may be determined by the display system at the time of generation of image **250'**. Note that if the display system changes the position or size of image **250'** then the position or size of the corresponding obstruction may also be changed.

[**0048**] **FIG. 13** further shows how the active obstructions are modified in response to real objects. **FIG. 13** shows

objects **450** and **880**. Monitoring means such as video cameras **310'** and **320'** may be added to the system to determine the position and/or character of the real objects. Upon determining the size and position of selecting object **450**, the obstruction is correspondingly modified to facilitate viewing of the real image of the selecting object. By modifying the stereoscopic obstruction to occur substantially between lines **870** and **877** on obstructer **860** and substantially between lines **874** and **878** on obstructer **860'**, the real image of selecting object **450** may be viewed. This is a top view graphical analysis. A similar graphical analysis can be performed for the side view, thus generating a two dimensional real image obstruction area on obstructers **860** and **860'**.

[**0049**] In another embodiment of the invention, the monitoring means determines the character of the real images and obstructs their view if they interfere with viewing other virtual reality images or other real images. For example, real object **880** corresponds to a relatively bright object, such as a streetlight or the sun. Such objects produce relatively bright images that tend to interfere with viewing of either virtual reality images or other real images. Video cameras **310'** and **320'** determine the location an relative brightness of the real image of object **880**. Then a stereoscopic obstruction occurs in substantial coincidence with the real image of object **880** by generating obstructions substantially between lines **882** and **884** on obstructer **860** and substantially between lines **886** and **888** on obstructer **860'**. Note that in this application, the stereoscopic projectors **870** and **870'** are optional. It is further noted that such stereoscopic obstructions may be created by the aforementioned heads-up display system of **FIG. 10**. In such a heads-up application, if only the enhancement of viewing real images is sought, the projector **200** can become optional.

[**0050**] **FIG. 14** shows an example of a view of a transparent display system without real image obstruction. **FIG. 15** shows an example view of the transparent display system with real image obstruction. The view of reality **850** includes a real image of a building and the sun **880**. A first virtual reality image **890** of a digital time of day clock is displayed superimposed on real image **850** in both **FIG. 14** and **FIG. 15**. **FIG. 14** also has a second virtual reality image of a streaming information display such as real time stock prices. The information streams from right to left towards the bottom of the display and is superimposed real image **850**. Real image **850** tends to interfere with the viewing of the streaming information of virtual reality image **892**. **FIG. 15** shows a real image obstruction **893** in substantial coincidence with virtual reality image **892**. Real image obstruction **892** substantially reduces visual interference from the real image and improves the viewing of the streaming information. **FIG. 14** also shows a third superimposed virtual reality image **894** of a video image. In this example the video image is that of a lecture given on the building being observed. However, image **894** is superimposed upon the sun **880** which is substantially brighter, making at least portions of the video image difficult if not impossible to view. The image from bright object **880** may also interfere with viewing of other virtual reality images as well as the real image of the building. **FIG. 15** generates a real image obstruction in substantial coincidence with virtual reality image **894** which substantially enhances its viewing. Further, creating a real image obstruction in substantial coincidence with or including the bright image **880** also enhances viewing of the other virtual reality images **890** and **892** as well as the real image of the building. Image **894** of **FIG. 14** and **FIG. 15** also includes a stereoscopic interface image **250'** which in this example may be used to raise or lower the volume of an accompanying audio portion of the video image **894**, a sound track of the speaker's lecture on the real image of the building being viewed. The real image of selector **450** is also shown. **FIG. 15** shows the real image obstruction in substantial coincidence with the real image of selector **450** being removed to facilitate viewing of the real image of selecting object **450**.

[**0051**] Referring back to the block diagram of **FIG. 7**, the block diagram also shows the active real image obstruction means **860** in substantial coincidence with display **200** in order create the previously described active obstruction of real images in a virtual reality display system. Obstructer **860** is controlled by obstruction controller **902** which in the preferred embodiment switches selected light valves of obstructer **860** off or on, or partially off or on in order to create a desired level of transparency or opaqueness. The obstruction controller adjusts the size, location and/or transparency of obstructions in response to manual inputs from the user from manual input means **904**, inputs from an information signal used to generate images displayed on display **200**, the coordinates of virtual images produced by the system from coordinates means **214** and/or in response to inputs from coordinates means **314** for determining coordinates of real objects having real images.

[**0052**] As previously described, it may be desirable for certain virtual reality images to be superimposed or combined with real images while other virtual reality images be viewed substantially only as virtual reality images with little or no interference from real images. Stereoscopic image generator **212** communicates the coordinates of the virtual images to obstruction controller **902** which generates the obstructions accordingly. The amount of transparency of each obstruction may be varied between substantially totally transparent through several levels of decreasing transparency to substantially opaque. If the virtual reality image having a corresponding real image obstruction is moved or resized, the corresponding real image obstruction is also moved or resized by obstruction controller **902**. Such a virtual realty image may be moved in response to a manual input from the viewer.

[**0053**] For example, the viewer may be watching a high definition movie in a small window with a corresponding partially transparent real image obstruction while traveling through an airport and on the way to a seat on the airplane. The transparency of the portions of the viewing area allows the viewer to do may things while viewing the movie in the small window. The viewer may use the real images navigate the crowds and corridors of the airport, communicate with airline and security personnel and find an assigned seat on the airplane. Once seated, the viewer may desire to substantially enlarge the viewing window of the movie and further reduce the transparency of the movie's real image obstruction in order to improve the viewing of the movie. Such adjustments can be done via manual inputs. The manual adjustments may be made via several means including switches or buttons associated with the display system or via a stereoscopic user interface system as previously described.

[**0054**] The virtual reality image and its corresponding real image obstruction may be moved or resized in response to

an information signal used to generate virtual reality images. For example, a substantially real time stock quote information stream is being displayed, and the user desires to receive alerts based upon a certain financial trigger. In an event of the trigger, the size of the image could be doubled to facilitate a second display of information related to the trigger. This is an example of the size of the virtual reality image, and its corresponding real image obstruction, vary in response to the information signal used for generating the virtual reality image. Furthermore, the transparency of the corresponding real image obstruction could be reduced in response to the trigger. This is an example of changing the size and/or transparency of the real image obstruction in response to an information signal used for generating the virtual reality image.

[0055] Obstruction controller **902** also receives coordinate information from coordinates means **314** in order to modify obstructions to facilitate viewing of a real image of a selecting object in an embodiment implementing the aforementioned stereoscopic user interface.

[0056] Coordinates means **314** also provides coordinates of substantially bright portions of the real image in order that corresponding real image obstructions may be generated to reduce the viewed brightness of the bright portions of the real image. This has the advantage of improving the viewing of both virtual reality images and other real images.

[0057] Coordinates means **314** is capable of determining the ambient brightness of the real images. In one embodiment, the ambient brightness may be used to adjust the transparency of the entire obstructer **860**. For example, if the ambient brightness of the real images doubled, the transparency of each pixel of the obstructer **860** would be substantially halved in order to maintain a substantially constant contrast ratio between the virtual reality images and the real images. If first and second portions of the obstructer had 100% and 50% transparency respectively, then upon a doubling of the ambient light, the first and second portions of the obstructer would be correspondingly adjusted to 50% and 25% transparency. Other non-liner adjusting relationships between obstructer transparency, real image ambient light and virtual reality image brightness are also anticipated. In simplified embodiment which detects substantially only ambient light, the means for determining coordinates of real images is not necessarily needed. Thus, the video cameras **310** and **320**, pattern recognizers **312** and **322**, and coordinate determining means **314** could be substituted for an simpler and lower cost ambient light sensor.

[0058] **FIG. 16** shows a flowchart of a method operating in accordance with the present invention. Step **910** checks for either a manual input or information including the virtual image indicating the need for a change in real image obstruction. If found, then step **915** resizes, and/or moves the image and/or real image obstruction, and/or changes the transparency of the obstruction. From either step **910** or **915**, step **920** checks for a change in ambient brightness of the real image and if found adjusts the overall transparency of the obstruction means in step **925**. Thereafter, step **930** checks for a substantially bright area in the real image and if found step **935** adjusts the transparency of an obstruction corresponding to the bright area in step **935**. Thereafter, step **940** determines if a selecting object is included in the real image, and if found adjusts the transparency of the obstruction to facilitate viewing of the selecting object in step **945**. Thereafter the program returns to step **910**.

[0059] In an alternate embodiment of selective real image obstruction of a virtual reality display system, the real image obstruction is a passive real image obstruction of a predetermined area of the display system. For example, real image obstruction **893** of **FIG. 14** and **FIG. 15** could be a permanent blacked out obstruction on the headset, a thick black stripe towards the bottom of each lens of the headset. In this way streaming stock information image **892** could always been seen with out interference from real images: other virtual reality images, such as **890** and **894**, would always appear combined with or superimposed upon real images. In this embodiment, the thick black stripe real image obstructer may be substantially unrelated to the display means used for projecting virtual reality images. This also enables active real image obstructer **860** to become an optional component of the display system. A further enhancement of the selective obstruction includes blocking only certain spectrum of visible light of real images with either the passive or active real image obstructer. This enhances viewing of a virtual image in the color region of the real image obstruction. For example, real image obstructer **893** may selectively block blue light causing real images in area **893** to appear substantially yellow. This substantially enhances viewing of the information stream **892**, particularly if the information stream is projected with a blue color. As a further embodiment, the entire display system can selectively block of filter a portion of the spectrum of light from real images (such as blue light) and with the display system projecting desired information (such as text, graph or line art) with a corresponding (blue) color in order to enhance viewing of the virtual (text, text graph or line art) images when viewed superimposed upon or combined with filtered light from the real images. Other virtual reality images (such a color video) may be projected in full color and viewed in combination with filtered light from the real images, or the real images may be substantially totally obstructed by an active image obstructer blocking substantially all spectrum of visible light as previously disclosed.

[0060] Thus, what has been provide is a virtual reality viewing system that provides for the advantages of both transparent and opaque viewing systems while reducing the disadvantages of both by actively obstructing views of real images to enhance views of select virtual reality images as well as views or other real images.

We claim:

1. A method of displaying a viewable virtual image within a display area having viewable real images, the method comprising the step of:

obstructing a view of real images in an obstruction area for obstructing views of real images within a portion of the display area, wherein the obstruction area is substantially independent of substantial obstructions resulting from a means for projecting the virtual image, thereby enhancing viewing of the virtual image in coincidence with the obstruction area while enabling viewing of the virtual image and the real images beyond the obstruction area.

2. The method of claim 1 further comprising the step of actively selecting the obstruction area from a plurality of obstruction areas within the display area.

3. The method according to claim 1 further comprising the step of

selectively modifying characteristics of the obstruction area in response to a modification signal.

4. The method according to claim 3 wherein said step of selectively modifying modifies a size, shape or location of the obstruction area.

5. The method according to claim 3 wherein said step of selectively modifying modifies an amount of obstruction of real images within the obstruction area between states including a first state wherein real images within the obstruction area are substantially visible and at least a second state wherein real images within the obstruction are not substantially visible.

6. The method according to claim 5 further comprising the steps of:

determining an amount of ambient light associated with the real images; and

generating the modification signal in response thereto, wherein said step of selectively modifying modifies the amount of obstruction in response to said step of determining.

7. The method according to claim 3 further comprising the steps of:

receiving a manual input; and

generating the modification signal in response thereto, wherein said step of modifying is made in response to the manual input.

8. The method according to claim 3 wherein the virtual image is generated in response to an information signal and said step of selectively modifying is responsive to the information signal.

9. The method according to claim 1 wherein the obstruction area occurs in a predetermined portion of the display area.

10. A display system comprising:

a first display projector for projecting a virtual image within a viewable area wherein the virtual image appears substantially combined with real images visible within the viewable area; and

a first real image obstruction means for obstructing viewing of real images within an obstruction area within the viewable area, thereby enhancing viewing of the virtual image appearing within the obstruction area while enabling viewing of the virtual image and real images in the viewable area and beyond the obstruction area.

11. The display system according to claim 10 comprised within a headset display system for a viewer having first and second eyes for viewing the virtual image and the real images further comprising:

a second display projector substantially equivalent to said first display projector; and

a second real image obstruction means substantially equivalent to said first real image obstruction means, and further wherein

the first eye views virtual and real images from said first display projector and said first real image obstruction means and

the second eye views virtual and real images from said second display projector and said second image obstruction means.

12. The headset display system according to claim 11 wherein the first and second display projectors display a stereoscopic virtual image viewable by the viewer, the virtual image includes a stereoscopic interface image appearing within an interface space viewable by the viewer, said headset display system further comprising

a monitoring means for determining an intersection of a physical object having a real image with the interface space including the stereoscopic interface image and for generating a control signal in response thereto.

13. The headset display system of claim 12 wherein the physical object is a selecting object having a real image including a selecting image and further wherein

said first and second real image obstruction means are responsive to said monitoring means for obstructing viewing of real images within an obstruction area substantially including the interface image yet enable viewing of the selecting image, thereby allowing the viewer to view the intersection of the selecting object with the stereoscopic interface image.

14. The headset display system according to claim 13 wherein said monitoring means further identifies the selecting object as a finger tip of the viewer.

15. The display system according to claim 10 further comprising

an obstruction controller coupled to said first real image obstruction means for selectively modifying characteristics of the obstruction area.

16. The display system according to claim 15 wherein

said obstruction controller modifies a size, shape or location of the obstruction area or an amount of obstruction of real images appearing within the obstruction area in response to a manual input.

17. The display system according to claim 15 wherein

said first display projector projects the virtual image in response to information included within an information signal, and

said obstruction controller modifies a size, shape or location of the obstruction area or an amount of obstruction of real images appearing within the obstruction area in response to the information signal.

18. The display system according to claim 15 further comprising

an ambient light monitoring means for determining an ambient light level of the real images and for generating a brightness signal in response thereto, wherein

said obstruction controller modifies an amount of obstruction of real images appearing within the obstruction area in response to the brightness signal.

19. The display system according to claim 11 further comprising:

an obstruction controller coupled to said first and second real image obstruction means for selectively modifying characteristics of the obstruction area;

a light monitoring means for determining a substantially high light level of a bright real image and a location thereof and for generating a light source signal in response thereto, wherein

said obstruction controller increases an amount of obstruction of the bright real image in substantial coincidence with the location in response to the light source signal.

20. In a headset display system, a method of enhancing viewing of a virtual image viewed in combination with real images comprised of a spectrum of light comprising the steps of:

substantially filtering a portion of the spectrum of light of the real images; and

displaying the virtual image in a light spectrum substantially within the filtered portion of the spectrum of light of the real images.

21. The method according to claim 20 wherein the virtual image includes a substantial amount of text or graphic information.

22. The method according to claim 20 wherein the virtual image is displayed in a viewing area of the headset display system and said step of substantially filtering filters the spectrum of light of real images for substantially the entire viewing area.

23. The method according to claim 22 further comprising the steps of:

substantially obstructing the entire spectrum of light of the real images within an obstruction area; and

displaying a second virtual image within the obstruction area.

24. The method according to claim 20 wherein the virtual image is displayed in a viewing area of the headset display system and said step of substantially filtering filters the spectrum of light of real images for a portion of the entire viewing area.

25. The method according to claim 24 further comprising the step of actively modifying a size or shape of the portion of the entire viewing area.

* * * * *