R. E. MILLER AND G. H. LIEBEGOTT.

AIR FILTERING SYSTEM FOR COOLING THE MOTORS OF ELECTRICALLY DRIVEN RAILWAY CARS.

APPLICATION FILED JAN. 17, 1918.

1,327,287.

Patented Jan. 6, 1920.

4 SHEETS—SHEET 1.

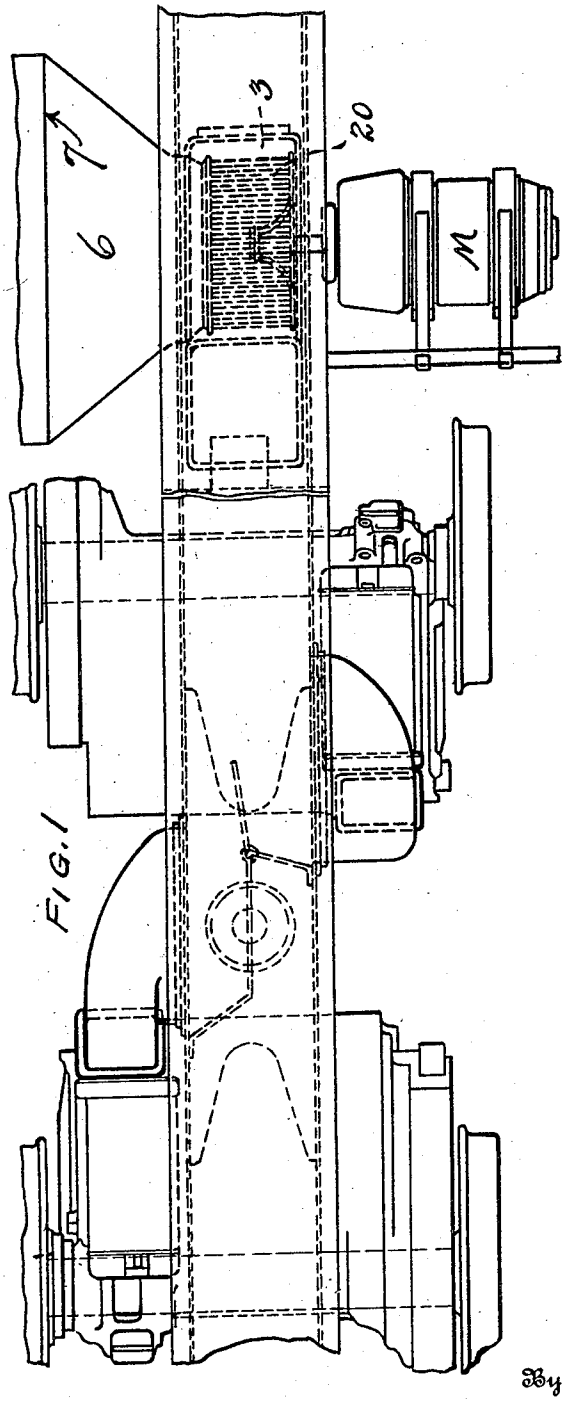

FIG. 1

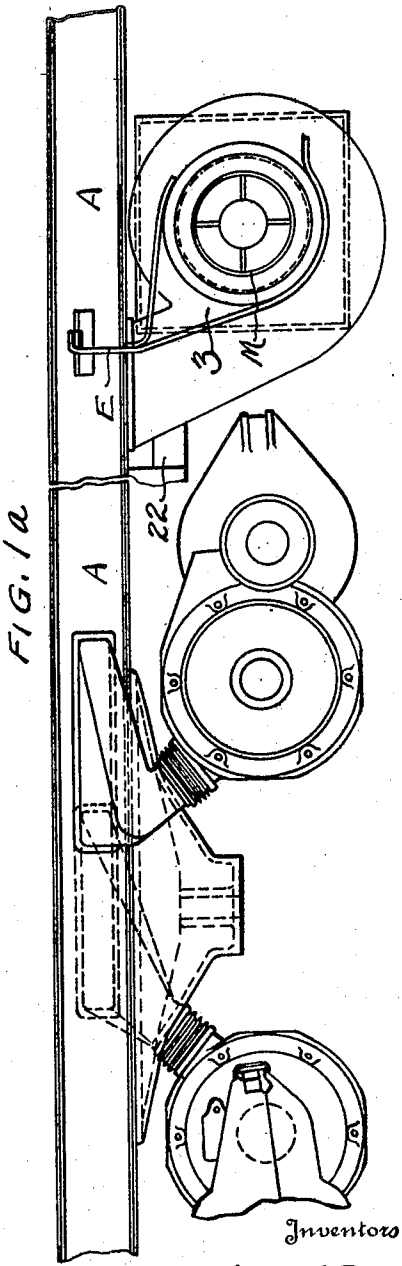

FIG. 1a

Inventors

ROBERT E. MILLER

GEORGE H. LIEBEGOTT.

By N. E. Lee

Attorney

R. E. MILLER AND G. H. LIEBEGOTT.

AIR FILTERING SYSTEM FOR COOLING THE MOTORS OF ELECTRICALLY DRIVEN RAILWAY CARS.

APPLICATION FILED JAN. 17, 1918.

1,327,287.

Patented Jan. 6, 1920.

4 SHEETS—SHEET 2.

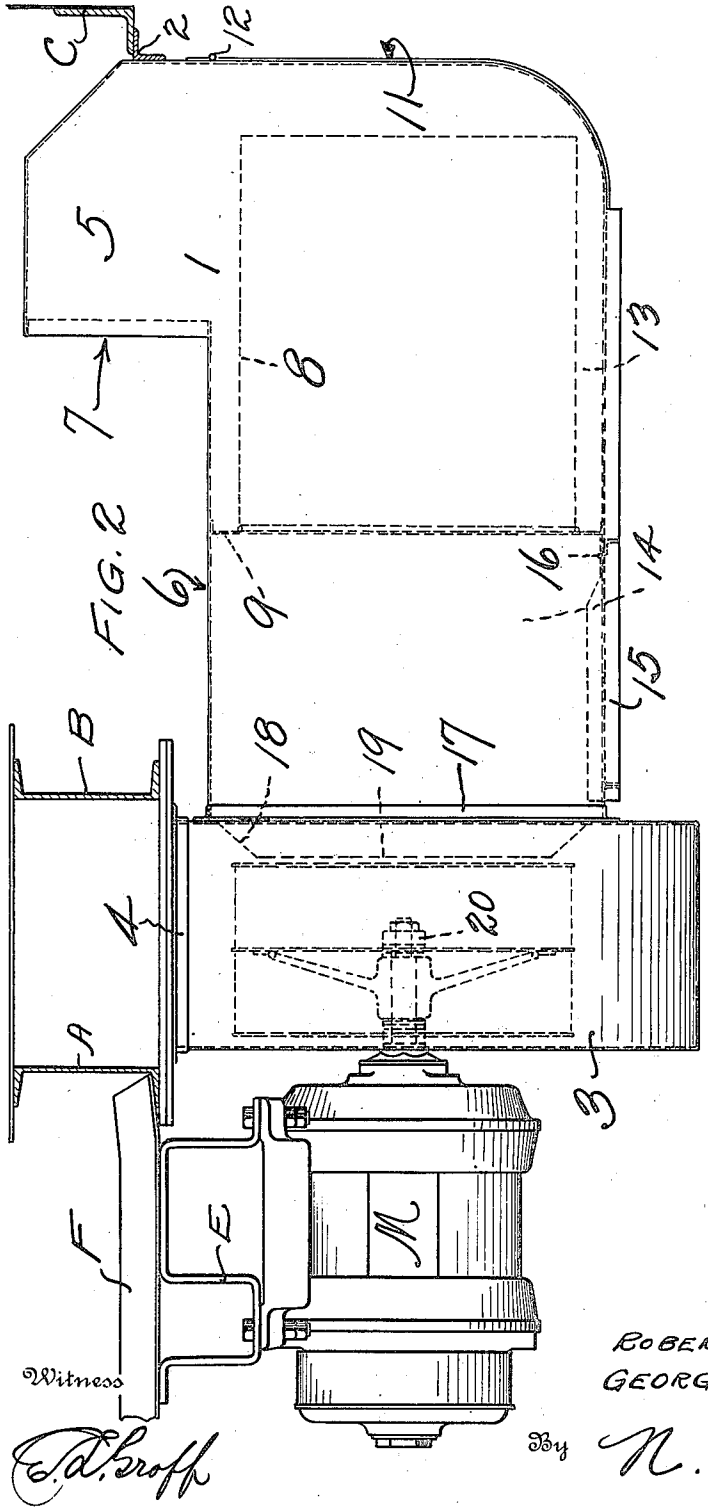

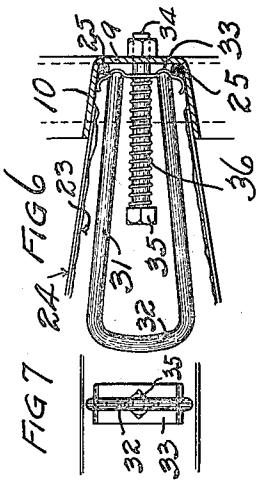

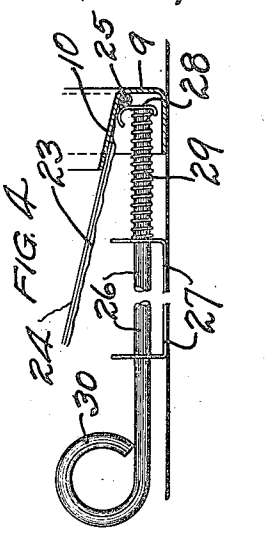

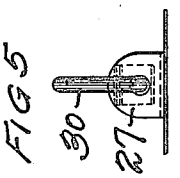

Witness

E. D. Groff

Inventors

ROBERT E. MILLER

GEORGE H. LIEBEGOTT.

By N. E. Gee

Attorney

R. E. MILLER AND G. H. LIEBEGOTT.

AIR FILTERING SYSTEM FOR COOLING THE MOTORS OF ELECTRICALLY DRIVEN RAILWAY CARS.

APPLICATION FILED JAN. 17, 1918.

1,327,287. Patented Jan. 6, 1920.

4 SHEETS—SHEET 3.

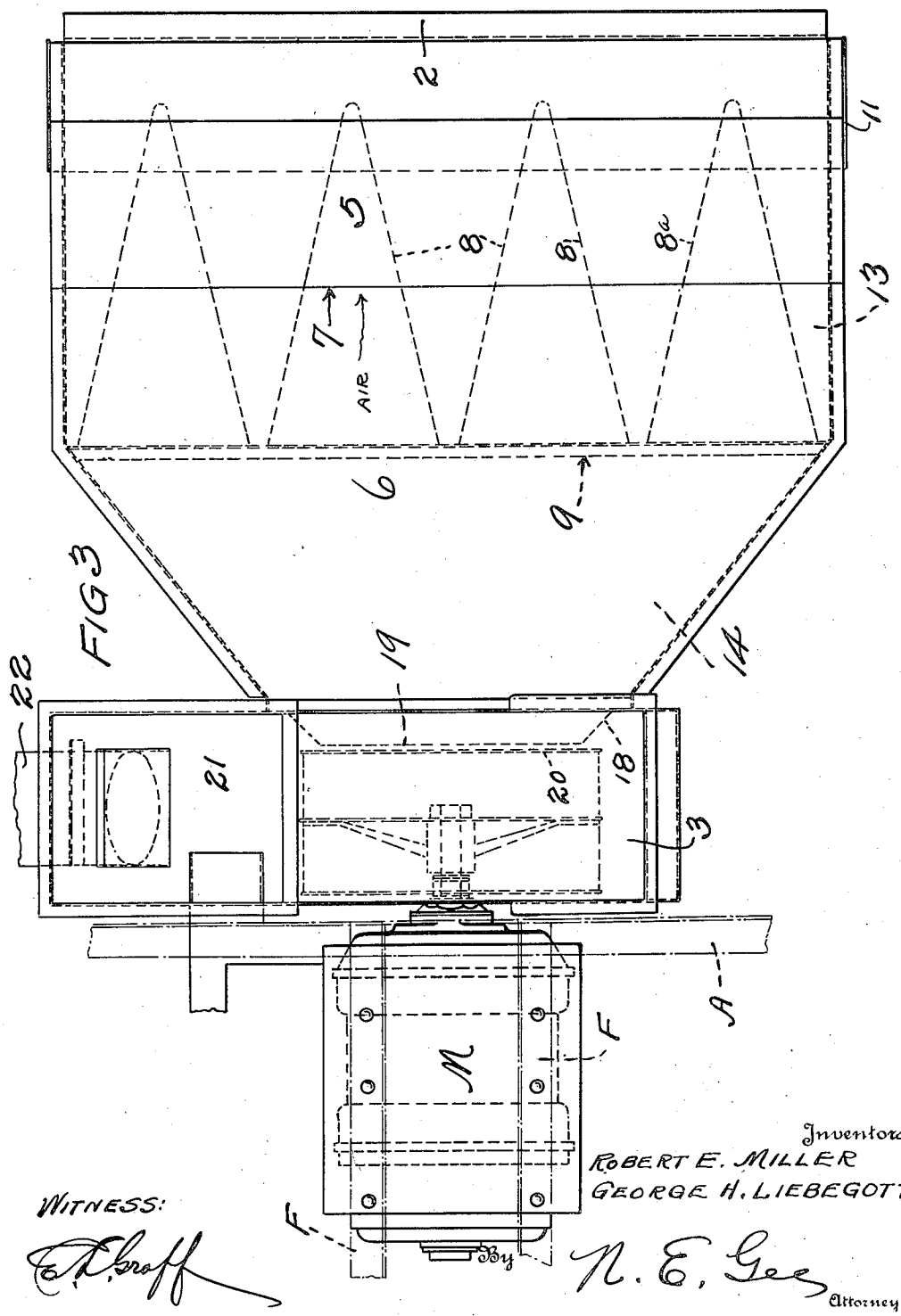

Inventors
ROBERT E. MILLER
GEORGE H. LIEBEGOTT.

WITNESS:

By N. E. Lee Attorney

R. E. MILLER AND G. H. LIEBEGOTT.

AIR FILTERING SYSTEM FOR COOLING THE MOTORS OF ELECTRICALLY DRIVEN RAILWAY CARS.

APPLICATION FILED JAN. 17, 1918.

1,327,287.

Patented Jan. 6, 1920.

4 SHEETS—SHEET 4.

FIG 8

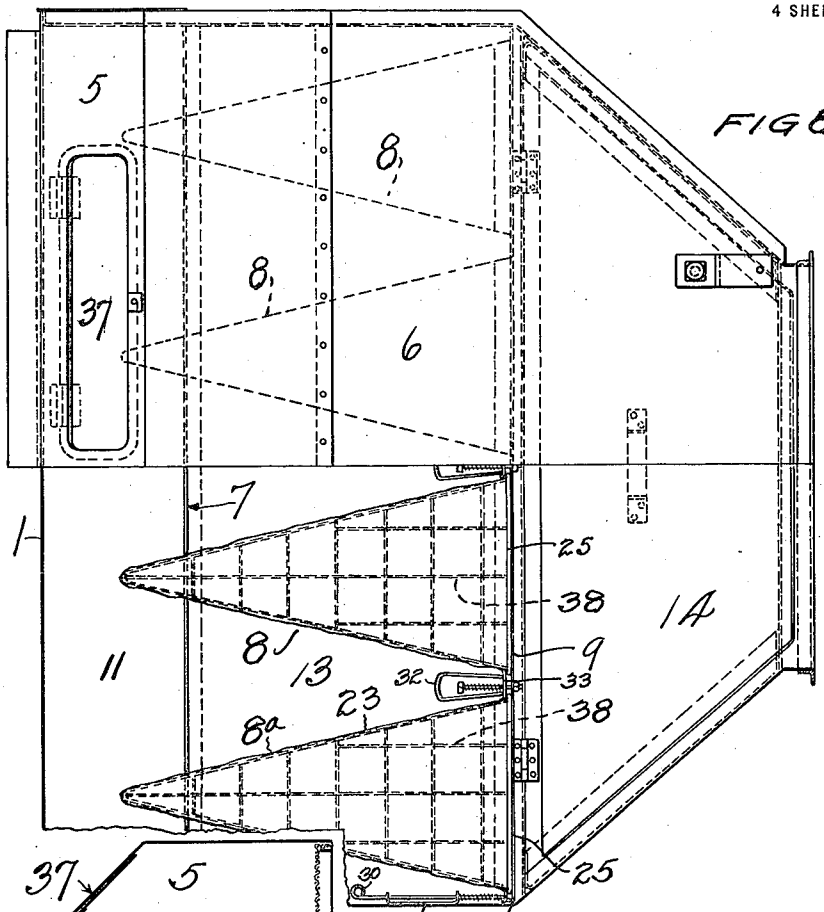

FIG 9.

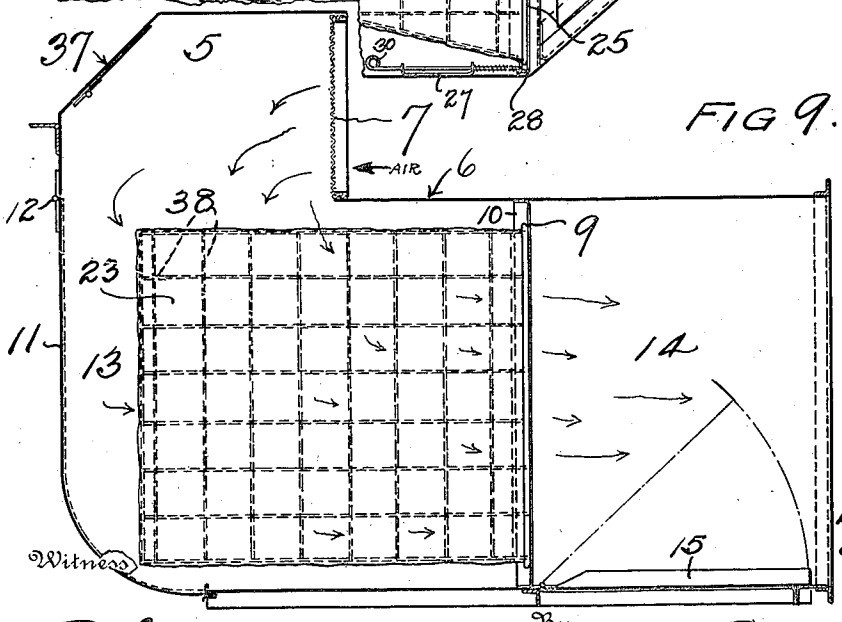

Witness

E. D. Groff

Inventors
ROBERT E. MILLER
GEORGE H. LIEBEGOTT

By N. E. Gee Attorney

UNITED STATES PATENT OFFICE.

ROBERT E. MILLER, OF ALTOONA, AND GEORGE H. LIEBEGOTT, OF DUNCANSVILLE, PENNSYLVANIA.

AIR-FILTERING SYSTEM FOR COOLING THE MOTORS OF ELECTRICALLY-DRIVEN RAILWAY-CARS.

1,327,287. Specification of Letters Patent. **Patented Jan. 6, 1920.**

Application filed January 17, 1918. Serial No. 212,299.

To all whom it may concern:

Be it known that we, ROBERT E. MILLER and GEORGE H. LIEBEGOTT, citizens of the United States, residing at 217 1st Ave., Altoona, Pa., and Duncansville, Pa., respectively, in the county of Blair and State of Pennsylvania, have invented certain new and useful Improvements in Air-Filtering Systems for Cooling the Motors of Electrically-Driven Railway-Cars, of which the following is a specification.

This invention relates to electrically driven railway motor cars, and has for its primary object a novel air filtering system, designed to furnish the motors and transformers with air that is free from dirt, snow and moisture, thereby enabling the car operator to continue the service under all weather conditions, thus reducing the cost per car mile, as well as enabling the operating department to continue the service with a minimum number of cars.

Another object of this device is to provide an air filtering system wherein the several parts are conveniently arranged and readily accessible for the purpose of removing and replacing the parts of the filtering system.

A still further object of this device is to provide an air filtering and motor cooling system for electric railway cars, wherein the air is drawn in through the filtering system and delivered to the motors and transformers in such quantities as to permit the motors to deliver the maximum of power without undue heating or trouble from short circuits caused by foreign particles coming in contact with the coils.

With these and many other objects in view which will be more readily apparent as the nature of the invention is better understood, the same consists in the novel construction, combination and arrangement of parts as will be hereinafter fully pointed out, illustrated and claimed.

It will be quite readily understood by those skilled in the art to which this invention belongs, that the same is susceptible to various changes and modifications in order to make it applicable to any apparatus requiring forced ventilation, without departing from the spirit or scope of the invention, but a preferred and practical embodiment thereof is shown in the accompanying drawings in which—

Figure 1 is a plan view of the system and shows the location of the motors with reference to the air filtering system.

Fig 1ª, is a side elevation of the parts shown in Fig. 1.

Fig. 2 is a side elevation of the improved filtering apparatus, showing the fan for drawing the air through the filtering system and the conduit through which the air is delivered to the motors.

Fig. 3 is a top plan view of the parts shown in Fig. 2 and shows the relation of the filtering elements to each other, positioned within the filter case.

Fig. 4 is a detail view, partly in section showing one of the elements for clamping the frames of the filtering medium in place.

Fig. 5 is an end elevation of the device shown in Fig. 4.

Fig. 6 is a view similar to Fig. 4, but showing another form of device which is used for holding the adjacent frame portions of adjoining filtering elements in place.

Fig. 7 is an end elevation of the construction shown in Fig. 6.

Fig. 8 is a composite plan and horizontal sectional view of the filtering case showing the filtering bags in position as well as means for keeping the filter bags from collapsing when the air is being drawn through them.

Fig. 9 is a vertical cross sectional view taken on the transverse center line of the construction shown in Fig. 8 of the drawings.

Similar reference numerals designate corresponding parts throughout the several figures of the drawings.

In carrying the present invention into effect it is proposed to suspend the entire apparatus from the beams A, B and C of the floor structure of the car or other vehicle, and therefore as shown in Fig. 2 of the drawings, the dust collecting box designated generally as 1 is suspended from the beam C by means of a suitable angle bar 2 while the blower box 3 which is in open communication with one end of the dust collecting

box is suitably suspended as at 4 from the beams A and B. And, as also shown in Fig. 2 the blower motor M may be also suspended by means of a suitable bracket E from the transverse supporting elements F of the car structure.

Referring now more particularly to the dust collecting box 1, it will be observed that the same is of a relative capacious character having an upper hood portion 5 which projects above the plane of the top 6 of the box 1 and has a screened opening 7 facing toward the beams A and B which are disposed longitudinally of the car, and at a considerable distance back of the outer side thereof. Thus, it will be apparent that the air taken into the dust collecting box 1 through the opening 7 is drawn from underneath the car and thence into the interior of the dust collecting box where it is drawn through a battery of detachable filtering elements designated generally as 8 and shown by the dotted lines in Fig. 3 of the drawings.

Before proceeding to a detailed description of these filtering elements and their characteristics, it may be noted that the inner part of the dust collecting box is provided with a vertical partition wall 9 which has therein a plurality of openings for receiving the open base portions of a plurality of the filtering elements 8 which, as will be seen, are of triangular formation. As will be observed from Figs. 4 and 6 of the drawings this wall 9 is provided at each opening with a suitable flange 10 whereby the open ends of said filtering elements may have a telescopic engagement therewith. And, for the purpose of rendering the filtering elements 8 readily accessible, one end of the box is preferably in the form of a door 11 which is hinged as at 12 and is of such a nature that when opened, the entire battery of filtering elements 8 supported on the partition 9 are rendered accessible. The location of the said partition wall 9 in the position indicated divides the dust collecting box 1 into a filtering chamber 13 in which the filtering elements 8 are located and a filtered air chamber 14 which is located between the filtering elements 8 and the blower casing 3. In order to render this filtered air chamber 14 accessible, the floor of the dust collecting box 1 is also provided with a door 15 which is hinged as at 16 and opens inwardly into the chamber. At the end of the filtered air chamber 14 opposite the partition 9, the dust collecting box is provided with an end wall 17 whose sides are tapered as indicated at 18 and define an opening 19 located in close proximity to the fan element 20 carried by the shaft of the motor M which constitutes the blower of the present apparatus, and provides for drawing the air in through the dust collecting box where it becomes filtered, and then causing it to discharge through the opening 21 into the filtered air conduit 22 which leads to the motors and transformer which serve to drive the car, as well as to the other apparatus requiring forced ventilation.

Referring now more particularly to the dust collecting elements 8, which, as previously indicated, are preferably of substantial triangular shape, it may be noted that the same preferably consists of a suitable fabric body 23 (Figs. 8 and 9) which is supported by a suitable wire or equivalent frame work 24 including a relatively stout attaching frame element 25 which is located exteriorly of the fabric filtering medium 23 as shown in Figs. 4 and 6, and is adapted to have a telescopic engagement with the flange elements 10 of the partition 9. Thus it will be apparent that the fabric filtering medium 23 of each of the filtering elements 8 is supported on a suitable wire frame, and each end of said frame is provided with a relatively stout attaching frame-wire 25 which, because of the disposition already referred to, is left in an exposed position to be engaged by suitable clamping devices for holding the entire wire frame in place.

These clamping devices are shown in detail in Figs. 4 to 7 inclusive of the drawings, and the form shown in Figs. 4 and 5 is particularly intended to hold the frame of the end filters 8^a in position, as will be observed from Fig. 7, while the formation shown in Figs. 6 and 7 is adapted to engage the adjacent elements 25 of adjoining filtering elements to thereby hold the adjoining edge portions of both in place on the partition 9.

Referring more particulary to the clamping device shown in Fig. 4 it will be observed that the same essentially includes a rod or stem portion 26 which is adapted to have a sliding engagement in a suitable bracket 27 carried by one of the sides of the dust collecting box 1, and one end of this rod or stem 26 has rigidly secured thereto a clamping foot 28 which is adapted to engage with the member 25 of the fabric filtering-medium-supporting frame. For the purpose of maintaining the said foot 28 of the clamping device in engagement with the member 25 a spring 29 is interposed between the said foot and one of the members of the bracket 27, and for the purpose of manipulating the rod 26 to withdraw the foot 28 from engagement with the member 25 against the position of said spring 29, the end of said rod 26 is provided with a suitable finger piece 30.

The clamping device shown in Figs. 6 and 7 of the drawings essentially includes a substantial U-shaped element 31 which may be conveniently gripped by the operator's hand at the point 32, while the opposite end thereof carries a clamping plate 33 which

is especially designed to clamp the members 25 of adjoining filtering elements, and is also provided with a central opening for receiving the other essential element of the device namely a guide bolt 34. This guide bolt is supported in the partition 9 at one end while its opposite end is fitted with a nut 35, whereby a coil spring 36 may be confined between the same and the dual clamping plate 33 for the purpose of pressing the latter into clamping engagement with the said member 25 of the filtering fabric supporting frames. Thus, it will be apparent that this form of clamp performs a dual frame clamping function while the construction shown in Figs. 4 and 5 is particularly designed to attain the same end at a point where the device shown in Figs. 6 and 7 could not be conveniently placed.

The relative arrangement of the devices shown in Figs. 4 and 5 and Figs. 6 and 7 can be readily observed from Fig. 8 of the drawings wherein a slightly modified form of dust collecting box is shown, and where there is also shown a modified type of support for the fabric portions 23 of the filtering elements 8. In this construction the dust collecting box 1 is provided with an additional door 37 which renders access to the screen 7 more convenient and instead of employing the skeleton frames 24 for supporting the fabric bag-like filtering mediums, a coarse mesh support 38 may be employed to give additional reinforcement. In all other respects the construction shown in Figs. 8 and 9 is identical with the dust collecting box structure shown in Figs. 2 and 3.

From the foregoing it will be apparent that when the fan element 20 of the blower device is in operation, air is drawn in through the screen 7, into the dust settling and collecting chamber 13 of the box 1, from whence it is drawn through the battery of filtering elements which are detachably supported on the partition 9 into the filtered air chamber 14. From this chamber it is drawn by the fan 20 into the blower compartment 3, and is thence discharged through the openings 21 and 22 into the filtered air conduit which leads to the motors and transformers respectively as shown in Fig. 1[a] of the drawings.

We claim:

1. In a cooling apparatus of the class described, a combined air filter and blower casing suspended from the bottom of the car and including a relatively large dust collecting box having an air intake hood portion projecting above the plane of the top of the body with its screened open side facing the longitudinal center of the car, a partition wall disposed transversely of the interior dust collecting box and having a plurality of openings therein, and a plurality of bag-like filter elements carried by said wall and having their closed ends disposed toward the air intake opening.

2. In a cooling apparatus of the class described, a combined air filter and blower casing suspended from the bottom of the car and including a blower-fan housing and a dust collecting box provided with an upstanding hood having a screened open side disposed toward the blower end of the casing, and a partition wall forming one side of the dust collecting box and having a plurality of flanged openings therein, the flanges of the said openings being disposed toward the opposite side wall of the dust collecting box, a plurality of bag-like filter elements detachably clamped to the flanged openings of said wall and having their closed ends disposed toward the side of the dust collecting box opposite the partition wall, and a door formed in said wall of the dust collecting box opposite the partition to facilitate the removal of the said bag-like filters.

3. In a cooling apparatus of the class described, a combined blower and air filtering unit including a dust collecting body having an interior partition wall provided with openings and offset flanges surrounding said openings, a plurality of filtering elements including supporting frames, and clamping devices coöperating with the reverse side of said flanges surrounding said openings to clamp the filter frame in position, said clamping devices including a spring pressed clamping member adapted to engage directly with the filter frame for forcing the same into the angles formed between the flanges of adjacent openings in the partition wall.

4. In a cooling apparatus, a combined blower and air filter unit having an interior partition wall dividing the same into air filtering and blower compartments, said partition wall having openings and offset flanges surrounding the same, clamping devices for coöperating with said flanges to clamp the filtering units thereto, said clamping devices each including a manipulating member having a clamping foot at one end thereof for coöperating with the said flanges, means for guiding said manipulating member in its movement, and a spring between the guide means and the clamping foot for yieldingly maintaining the latter in clamped relation.

In testimony whereof we affix our signatures in presence of two witnesses.

ROBERT E. MILLER.
GEORGE H. LIEBEGOTT.

Witnesses:
J. T. HANLON,
B. C. MCCORMICK.