United States Patent

[11] **3,599,358**

[72] Inventors **Orville R. Butts**
Cherry Hill;
John R. Dorner, Moorestown, N.J.;
Raymond L. Hanisco, Lansdale, Pa.

[21] Appl. No. **54,718**
[22] Filed **July 14, 1970**
[45] Patented **Aug. 17, 1971**
[73] Assignee **Proctor-Silex Incorporated**
Philadelphia, Pa.

[54] **IRONING TABLE WITH MAGNETIC KEEPER FOR IRON**
10 Claims, 3 Drawing Figs.

[52] **U.S. Cl.** **38/107,** 248/117.2
[51] **Int. Cl.** **D06f 79/02,** D06f 81/00
[50] **Field of Search** ..... 248/117.1-—117.5, 117.6, 117 7, 38/42, 107, 142, 79, 96, 141

[56] **References Cited**

UNITED STATES PATENTS

1,820,270	8/1931	DePenning	38/107
2,493,846	1/1950	Andrews	38/107
2,602,247	7/1952	Cochran	38/79
3,443,780	5/1969	Bruening	248/117.2

Primary Examiner—Jordan Franklin
Assistant Examiner—George V. Larkin
Attorney—Robert S. Vermut

ABSTRACT: A conventional ironing table having an opening in its board receiving a magnet and flux-shunting plate which are both movably retained therein by a bracket fixed to the underside of the board. Since a pad is generally used on the board, the magnet and shunting plate preferably project above the plane of the board and the pad is provided with an opening configured similarly to the opening in the board to receive the projections to minimize the airgap between the magnet and iron and properly balance the moments and forces acting on the iron. To supplement the retention of the iron on the table by attraction of the magnet to the steel tank of the iron, a flux-shunting plate having projecting wings for additional stabilization may be attached to the heel of the iron.

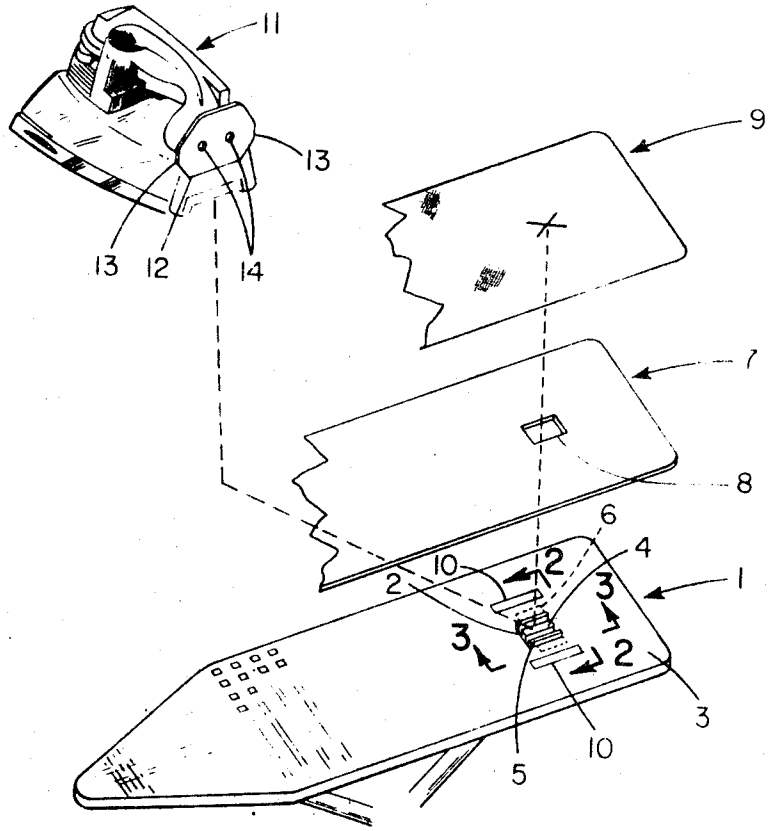

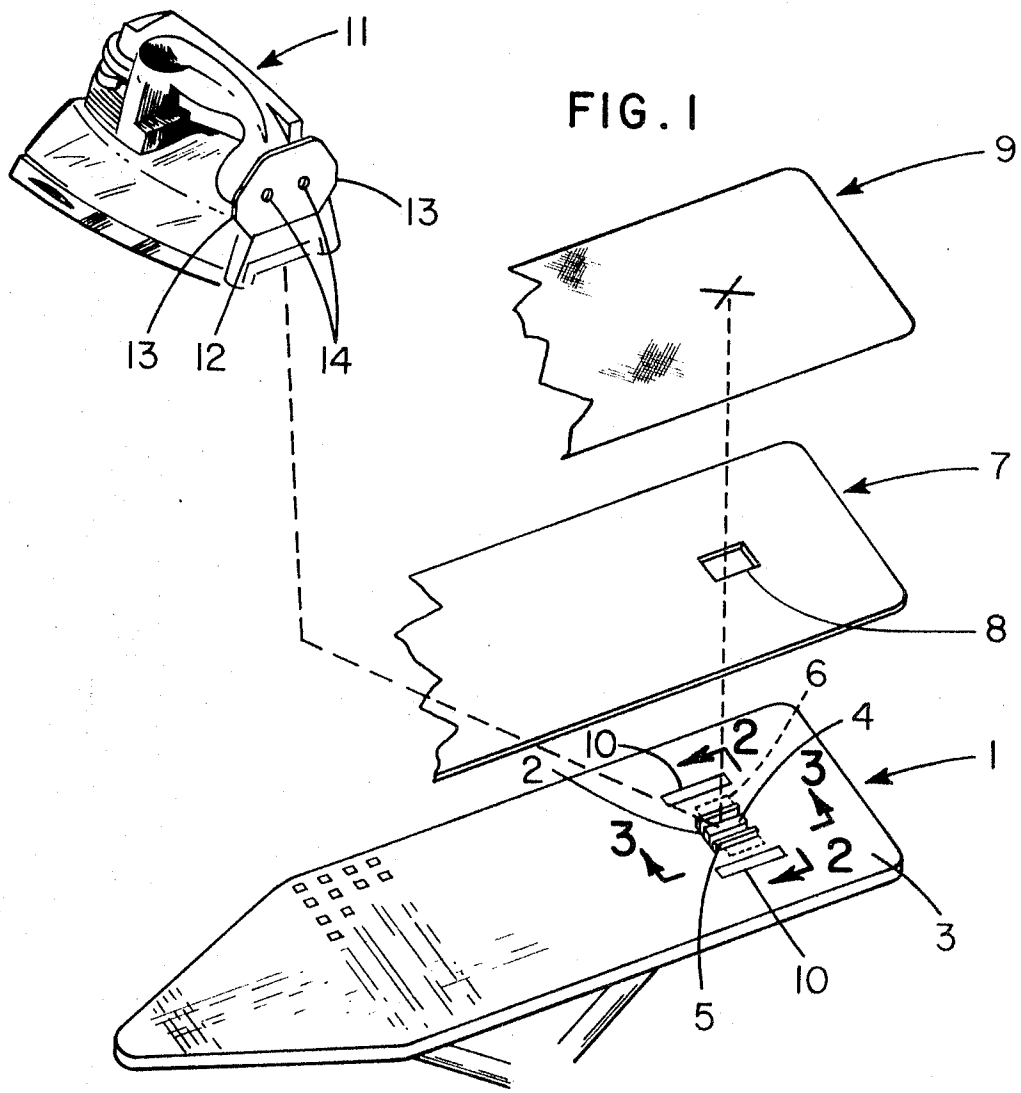

FIG. 1

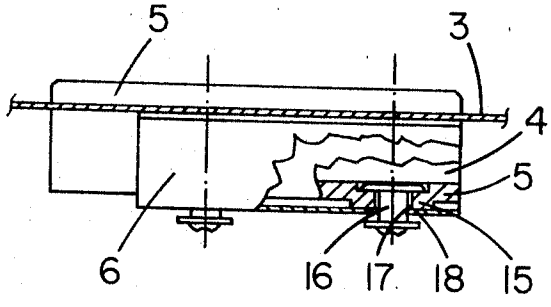

FIG. 3

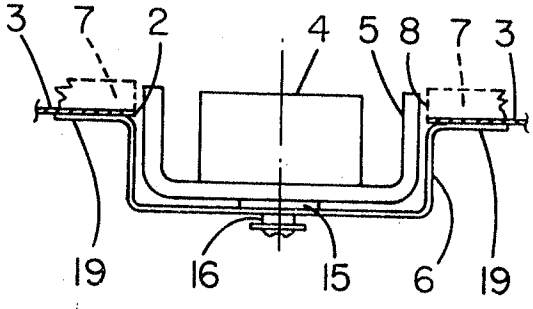

FIG. 2

INVENTORS
Raymond L. Hanisco
John R. Dorner
Orville R. Butts
BY Robert S. Vermut
ATTORNEY

IRONING TABLE WITH MAGNETIC KEEPER FOR IRON

BACKGROUND OF THE INVENTION

1. Field of the Invention

This invention relates to the field of ironing tables and, more particularly, to the board of an ironing table having a keeper intended to interact with an iron placed thereon to retain the iron in a substantially stable relationship therewith.

2. Description of the Prior Art

There have been many attempts in the prior art to provide keepers to securely retain an iron on an ironing table in temporarily unused position. Most of these attempts have been directed toward mechanical means which have required some additional movements by the user (other than normal ironing hand motions) to latch and unlatch the iron to the table to secure it. These additional movements have resulted in excessive time and effort in the total ironing operation, and, therefore, mechanical keepers have to date not been commercially successful.

Other attempts at keepers for ironing tables have been made to more or less permit the normal ironing motions of the user. These latter attempts have been directed toward the use of magnetic forces in the iron-ironing motions of the user. These latter attempts have been directed toward the use of magnetic forces in the iron-ironing table combination. Specifically, U.S. Pat. No. 2,602,247, issued July 8, 1952 shows an iron incorporating an electromagnet **19** to work in conjunction with the steel board of an ironing table. This attempt proved unsatisfactory because of the increases in weight, cost and bulkiness of the iron and the probability that the iron in operation attracted certain metal clasps et cetera on the clothes being ironed. Another attempt at the use of magnetic force to solve the problems of the prior art is U.S. Pat. No. 3,443,780 issued May 13, 1969. This patent shows an ironing table board which has a magnet **12** acting as a keeper interacting with a conventional iron **10**. The latter patent, although analogous in broad combination to the present invention, clearly is remiss in its technology and convenience to the user. Thus, the size of the patentee's magnet is not feasible and no shunting of the magnetic flux is disclosed. Also, the application of a magnetic plate as is shown at **12** by the latter patentee clearly would create an obstruction to the user and thereby reduce the area available for ironing.

The present invention presents a feasible solution to all of the problems which the prior art foresaw but could not correct or created itself. For example, the problem generated by the fears of the user that the iron might fall from the ironing table due to momentary instability of the table is substantially mitigated. In addition, the problem of obstructing the normal ironing patterns of the user because of projecting parts of the keeper above the board of the table has been alleviated by the present invention which positions its keeper within the board of the table and, if a pad is to be used, provides for a correspondingly configured opening in the pad to compensate for projecting parts of the keeper. In conclusion, the present invention provides a technologically feasible, nonobstructing, convenient keeper for an ironing table in use with most conventional irons or irons which may be as disclosed otherwise.

SUMMARY OF THE INVENTION

The present invention is directed to an ironing table having a board with a recess movably receiving magnetic means therein. In the preferred embodiment, the magnetic means comprises a magnet and shunting plate which are floatingly retained with respect to the board in the recess by a fixed bracket to which the shunting plate is riveted by shoulder rivets to permit the floating relationship. In addition, the preferred embodiment shows that the present invention may (1) increase the stabilization of the iron on the table by incorporating in the iron a flux-shunting plate either with or without projecting wings and (2) decrease the airgap between the magnetic means and iron in holding position and properly balance moments and forces by providing an opening in the normally used pad and projecting the magnetic means above the plane of the ironing table board a distance sufficient to compensate for the compressed thickness of the pad by an iron.

It is therefore an object of the present invention to provide an ironing table with a keeper for an iron which is nonobstructing to the normal ironing patterns of the user and is readily, conveniently utilized.

This and other objects, features and advantages of the present invention will become more apparent when reading the following description in the light of the accompanying drawing and claims.

BRIEF DESCRIPTION OF THE DRAWING

FIG. **1** is an exploded, perspective view of an ironing table, pad, cover and iron with the former three shown in partial view;

FIG. **2** is an elevation view, cross sectioned in part, taken along line **2–2** of FIG. **1**; and

FIG. **3** is an elevation view, cross sectioned and broken away in part, taken along line **3–3** of FIG. **1**.

DESCRIPTION OF THE PREFERRED EMBODIMENT

Referring now more particularly to the drawing with reference numerals, in FIG. **1**, an ironing table generally designated at **1** is shown which may be of a type similar to that shown in U.S. Pat. No. 2,896,347, issued July 28, 1959. The table is shown with its board **3** having recess means such as an opening **2** of rectangular configuration therein. The opening **2** is located in an area of the board where an iron would be most stable, her shown above the connection of the forwardly leaning leg to the board. The opening **2** is of sufficient size to readily clear magnetic means (here shown as a magnet **4** and flux-shunting plate **5** even though the magnet **4** may be used alone) received therein and to be described in more detail hereinafter. The magnet and shunting plate are held floatingly within the opening **2** by a bracket **6** shown in dotted lines and also to be described in more detail hereinafter.

The planes of the upper surfaces of the magnet **4**, flux-shunting plate **5** and the iron support area of the board should be related for best results. Thus, the airgap between the magnet and plate and the iron should be minimized and a proper balancing of moments and forces which might act on the iron in retained position should be obtained. For example, when, as is normally the case, a pad and cover are applied to the board, a pad generally designated at **7** may be provided with an opening **8** of analogous rectangular configuration to the opening **2** and the magnet **4** and plate **5** may be partially received within the opening **8**. The latter reception presents the user with no obstructions to normal ironing patterns because of the leveling of the projecting parts of the magnet and shunting plate by the compressed thickness of the pad. The pad **7** is adhered to the board **3** of the table by strips of adhesive **10**, and an imperforate cover generally designated at **9** is also shown to complete the normal combination of ironing table pad and cover and is marked to inform a user in normal operation of the location of the magnet **4**.

In addition, an iron generally designated at **11** is shown in FIG. **1** and is of conventional construction with the preferable incorporation of a flux-shunting plate **12**. The plate **12**, although not necessary because most of the conventional irons have a steel tank to give rise to magnetic retentivity by the magnet flux density and may be provided with projecting wings **13** for increasing the lateral stability of the iron in heeled position. The plate **12**, preferably made of one-eighth inch thick cold rolled carbon steel, is fixed to the rear plate of the iron by a pair of rivets **14** and should be of sufficient size to completely cover the area defined by the shunting plate **5**.

Referring now to FIGS. **2** and **3**, the magnet **4** is preferably made of a hard ferrite ceramic, permanent magnetic material of approximately 1.66 square inches in exposed area. The

magnet is received within shunting plate 5 which is of U-shaped configuration in transverse section, is substantially the same length as the magnet 4 and is preferably made of cold-rolled steel. As can be seen from FIG. 2, the magnet is centrally located within the channel defined by the U-shaped configuration of the shunting plate 5 and is spaced from the inner upstanding walls of the shunting plate 5 on each side by approximately one-quarter of an inch.

As seen in FIGS. 2 and 3, the shunting plate 5 has a pair of bosses 15 with centrally located bores 17 and the bracket 6, also of U-shaped configuration in transverse section, has a pair of openings 18 concentric with the bores 17, both of which receive shoulder rivets 16. The bracket 6, in addition to its generally U-shaped configuration in transverse section, has laterally extending flanges 19 which are spot welded to the underside of the board 3.

As can be noted in FIG. 2, the upstanding walls of the plate 5 and the bracket 6 are spaced apart and the bottom walls of the plate 5 and bracket 6 are also spaced apart substantially throughout their length by the bosses 15 so that the shunting plate 5 is free to move within the channel defined by the opening 2 and bracket 6 and is limited in addition thereto only by the allowance of shoulder rivets 16 as shown in FIG. 3. This limited movement of magnet 4 and plate 5 assists the relative positioning of the magnet, plate and iron support area in the previously stated and desirable balancing of moments and forces to permit ease of removal of the iron yet hold it against momentary instability when the table is bumped. The bracket 6 is preferably made of cold-rolled steel and is dimensioned in length somewhat shorter than the shunting plate 5 with the excess of the length dimension of the shunting plate projecting toward the nose of the ironing table.

Thus, an ironing table has been shown with an opening in its board slightly larger than a magnet and a shunting plate received therein with the magnet and shunting plate floatingly retained in position by a bracket fixed to the underside of the ironing table board. If a pad and cover are intended to be used by the user, the airgap between iron and magnet may be minimized by the provision of an opening in the pad configured similarly to the opening in the board so that the magnet 4 and the shunting plate 5 may be floatingly supported by the bracket 6 within the opening 2 with a slight projection above the plane of the ironing table board 3 to compensate for the compressed thickness of the pad in use. The latter, in addition to utilizing the available magnetic strength of the magnet, also precludes any obstructions to the normal ironing patterns of the user. The floating relationship of magnet and shunting plate with respect to the board permits the magnet and shunting plate to move with the iron to a limited extent to thereby increase stability and utilization of magnetic forces.

Since the preferred embodiment may be modified in numerous ways within the scope of the present invention as, for example, by the use of differently configured magnets and shunting plates, by the projection or nonprojection of the magnets and shunting plates above the ironing table board, by the use or nonuse of the shunting plate on the iron et cetera, the preferred embodiment should be viewed as illustrative and not in a limiting sense.

What we claim is:

1. An ironing table comprising a board having recess means therein, magnetic means received within said recess means and said table having means floatingly supporting said magnetic means for multidirectional movement in said recess means so that said magnetic means is free to maintain maximum magnetic strength between it and an iron adapted to be positioned over said recess.

2. The ironing table set forth in claim 1 wherein said magnetic means comprises a magnet and a flux-shunting plate.

3. The ironing table set forth in claim 1 wherein said means movably supporting said magnetic means includes a bracket fixed to the underside of said board and defines a well with said recess means, said recess means being an opening through the board.

4. The ironing table set forth in claim 3 wherein said magnetic means comprises a magnet and a flux-shunting plate both of which are received within said well and spaced from the periphery thereof.

5. The ironing table set forth in claim 4 wherein said shunting plate and said bracket are spaced from each other along the bottom of said well by boss means on said shunting plate and shoulder rivets extend through said boss means to movably secure said plate to said bracket.

6. The ironing table set forth in claim 1 wherein said magnetic means project above the plane of said board, said board has a pad and cover fitted thereon, and said pad has an opening therethrough coextensive with said recess means.

7. The ironing table set forth in claim 6 wherein said magnetic means projects a distance above the plane of said board substantially equal to the normally compressed thickness of said pad by an iron and said cover includes a marking indicating the location of said magnetic means.

8. The ironing table set forth in claim 1 in combination with an iron having a flux-shunting plate secured to the heel thereof.

9. The combination of an ironing table and iron wherein said ironing table has a board with an opening therein, a magnet and first flux-shunting plate received within said opening and defining a keeper for said iron, a bracket fixedly secured to the underside of said board below said opening and movably secured to said shunting plate, said first shunting plate supporting said magnet whereby said magnet and first shunting plate are movably retained within said opening, said iron including a second flux-shunting plate secured to the heel thereof and adapted to interact with said ironing table when said second flux-shunting plate is placed on said magnet and first shunting plate to keep said iron in stable relation to said table.

10. The combination set forth in claim 9 wherein said board includes a pad and a cover secured thereto, said pad having an opening therethrough coextensive with said opening in said board, said magnet and first shunting plate project above the plane of said board a distance substantially equal to the compressed thickness of the pad by an iron, and said cover has a marking indicating the location of said magnet and first shunting plate so that a user may knowingly position the second shunting plate of said iron upon the magnet and first shunting plate of the table to give rise to a proper magnetic flux pattern.

UNITED STATES PATENT OFFICE

CERTIFICATE OF CORRECTION

Patent No. 3,599,358 Dated August 17, 1971

Inventor(s) Orville R. Butts et al.

It is certified that error appears in the above-identified patent and that said Letters Patent are hereby corrected as shown below:

Column 1, line 27, after "iron-ironing" cancel "motions of the user. These latter attempts have been directed toward the use of magnetic forces in the iron-ironing". Column 2, line 34, "her" should read -- here --; line 67, after "magnet" insert -- 4 and shunting plate 5, is preferable for increased magnetic --.

Signed and sealed this 30th day of May 1972.

(SEAL)
Attest:

EDWARD M.FLETCHER,JR.
Attesting Officer

ROBERT GOTTSCHALK
Commissioner of Patents