June 13, 1950 L. E. TELBIZOFF 2,511,793

SPEED CONTROLLING MECHANISM FOR REVOLVING DOORS

Filed Feb. 23, 1946

Fig. 1

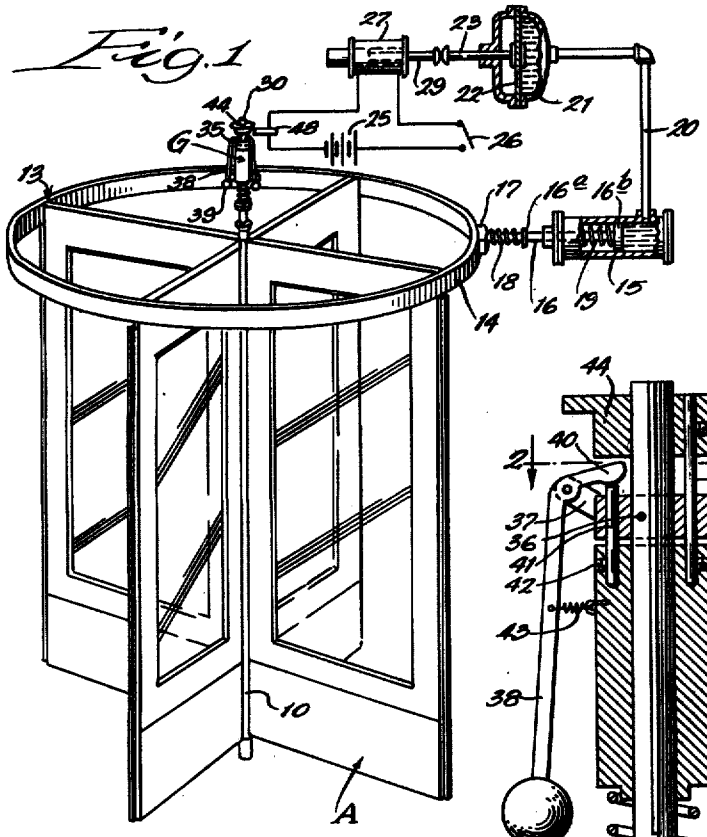

Fig. 3

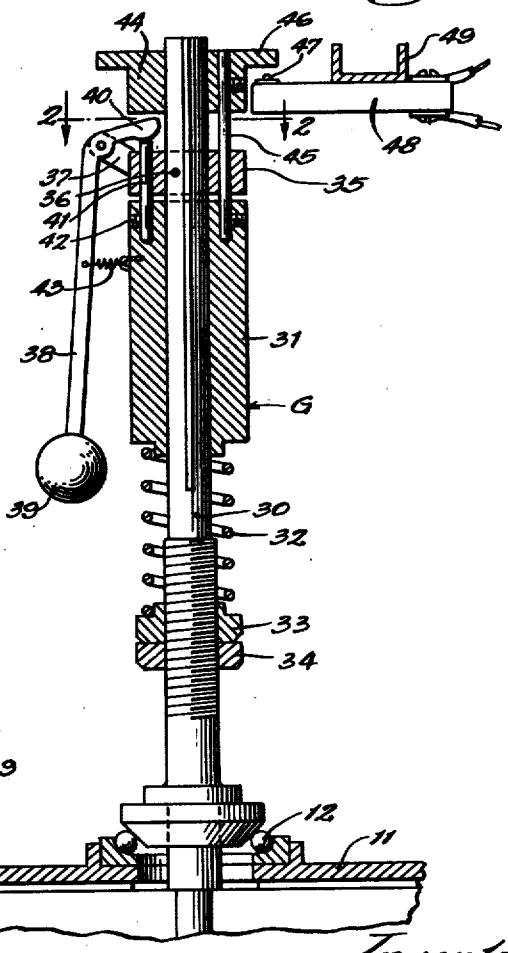

Fig. 2

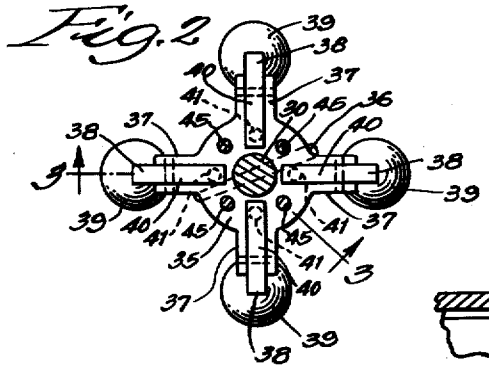

Inventor:
Louis E. Telbizoff,
By Dawson, Cobb & Spangenberg,
Attorneys.

Patented June 13, 1950 2,511,793

UNITED STATES PATENT OFFICE

2,511,793

SPEED CONTROLLING MECHANISM FOR REVOLVING DOORS

Louis E. Telbizoff, Monroe, Mich.

Application February 23, 1946, Serial No. 649,710

8 Claims. (Cl. 188—180)

1

This invention relates to speed controlling mechanism for a revolving door, and more particularly to mechanism for limiting the speed of a revolving door to a predetermined maximum.

Rapid movement of revolving doors is hazardous and likely to produce personal injury. Whether the rapid movement be caused by a person passing through in a hurry or is deliberately produced as a prank, there is danger that the person next entering the door will be struck. Also, when a person passing through on one side gives the door a rapid motion, there is great danger that the person passing through on the other side will get bumped by the door, resulting possibly in a foot or head injury.

One way of minimizing the danger is to mount the doors in tight engagement so that considerable force will be necessary to move the door and a great deal of effort would have to be expanded to make the door move at a rapid rate. This expedient, though it may minimize the danger somewhat, is unsatisfactory because it makes the door difficult to operate so that children and others having lesser physical strength may pass through only with great difficulty or must require assistance to operate the door.

It is an important object of this invention to provide mechanism which will limit the speed of a revolving door without affecting the operation of the door at normal speeds and thus permit easy turning of the door at lower speeds but make it very difficult to move the door at above a certain predetermined speed.

More specifically, it is an object of the invention to provide hydraulic braking mechanism electrically controlled and sensitive to the speed of the door for restricting movement of the door at high speeds. Other specific objects and advantages of the invention will appear as the specification proceeds.

One embodiment of the invention is illustrated in the accompanying drawing in which Fig. 1 is a perspective view of a revolving door showing, in a schematic manner, the control mechanism which is associated with the door; Fig. 2 is a sectional view of the governor, the view being taken along the line 2—2 of Fig. 3; and Fig. 3 is a vertical sectional view of the governor, the section being taken along line 3—3 of Fig. 2, this view showing the electrical switch with which the governor cooperates.

The revolving door A, as illustrated in Fig. 1, has a central vertical shaft 10 which at its bottom end is adapted to be pivotally held in the floor, preferably by a ball bearing construction,

2

and at its top end is pivotally mounted in a top support 11, as by the ball bearing 12. (See Fig. 3.) At the top of the door is the circular disk 13 which is concentric with the shaft and provides at its edge a braking track 14. This disk is secured with the door and rotates with the door.

Mounted on a stationary structure near the door is a hydraulic cylinder 15 having the piston 16, and at the end of the piston is a brake shoe 17 which is adapted to frictionally engage the track 14. A spring 18 extends between shoulder 16^a on the piston and the brake shoe and is adapted to maintain the shoe resiliently in engagement with the track when the piston is advanced. Another spring 19 extends between the piston head 16^b and the front end of the cylinder and is for the purpose of returning the piston to retracted position when hydraulic pressure is not applied to the rear of the piston head.

A pipe line 20 connects with the interior of cylinder 15 at a point rearward of the piston head 16^b, and at its other end this line connects with a hydraulic pump or actuator 21. The interior area of pump 21 is centrally separated by the diaphragm 22, and hydraulic fluid is contained forward of this diaphragm. A piston 23 extends forwardly into the chamber and connects with the central portion of the diaphragm.

The electrical system, which is intended to control the hydraulic mechanism, includes a battery 25 or other suitable source of electrical energy, a hand switch or circuit breaker 26 for safety purposes, a solenoid 27, and a switch 48 adapted to be operated by the governor in a manner to be explained later. The solenoid 27 is equipped with a plunger 29 which, when extended, contacts and urges forward the piston 23 of the actuator 21.

The governor G, more clearly illustrated in Figs. 2 and 3, includes a central shaft 30, which shaft may be an extension of the shaft 10. The governor is disposed above the top stationary support, as seen in Fig. 3.

Slidably received over shaft 30 is a sleeve or body portion 31. This body portion is adapted to slide vertically along the shaft and is pressed upwardly by the spring 32, which also extends about shaft 30 and is supported at its bottom by the nut 33 which is held secure by the lock nut 34. Above body 31 is a collar 35, which is locked to the shaft 30 by the set screw 36. This collar is provided with two or more pairs of arms 37. The present illustration shows four pairs of such arms. Pivotally mounted in each of these pairs of arms is a member 38 which is sensitive to cen-

trifugal force. Weights 39 are carried at their lower ends. At the upper ends of these members are the fingers 40 which extend inwardly and contact the top ends of pins 41. Pins 41 extend downwardly through openings in the collar 35 and are secured in the body 31 by means of the set screws 42. The auxiliary springs 43 may be employed, if desired, for aiding in holding the centrifugal members in retracted position.

At the upper end of shaft 30 is the collar member 44 which is slidably received on the shaft and adapted to move vertically thereon. This collar member is held in fixed relation to the body 31 by means of the pins 45 which are secured by set screws to both the collar member and the body member and which extend through openings in the collar 35. Collar member 44 is equipped with a flange 46 which extends over the button 47 of the electrical switch 48 mounted nearby on support 49.

As the governor is rotated more rapidly, the centrifugal members 38 will be caused to move about their pivots, permitting the balls 39 to swing outwardly. Their upper ends are then caused to press downwardly on the pins 41 causing the body 31 and also the member 44 to be moved downwardly. This brings the flange 46 into engagement with the button 47 on switch 48 so as to depress this button and maintain it depressed so long as the speed of the governor is such as to maintain the centrifugal members in their extended condition.

When the body 31 is depressed through the action of the centrifugal members, it will be seen that it moves against spring 32 and it will be apparent that this spring may be placed under greater tension, thereby causing operation of the governor only at greater rotational speeds by tightening the nut 33. Alternately, the governor may be caused to operate at lesser speeds by turning down the nut 33 so as to loosen the spring.

With this improved arrangement, the revolving door may be mounted so as to be as nearly frictionless and move with as little effort as is possible. In operation, the door may revolve at low speeds with a mere touch which is strong enough to overcome the natural momentum of the door. However, when through any circumstance, the door is accelerated to a certain speed for which the device is set, the centrifugal members 38 of the governor G swing outward to the point where the flange 46 of the governor is depressed to the point where it presses the button 47 of switch 48 to its downward position. This completes the electrical circuit, thus energizing the solenoid 27 and causing it to throw the plunger 29 forwardly. This pressure applied against the piston 23 presses the diaphragm 22 forwardly, thus urging fluid through the line 20 and into cylinder 15 behind the piston 16. The piston 16 responds to this hydraulic pressure and moves forwardly, urging the brake shoe 17 into frictional engagement with the track 14. Through the braking effect, due to this frictional engagement, the door is retarded in speed.

When the door comes to move more slowly and its speed is below the critical speed required for operation of the governor, the centrifugal members 38 will have moved inwardly sufficiently to allow the body 31 of the governor to rise urged by the spring 32, thus raising the flange 46 to the point where it no longer depresses button 47 of switch 48, and through the action of the spring-pressed button the electrical circuit is broken. This de-energizes solenoid 27 releasing hydraulic

pressure on the cylinder 15 and permitting the piston 16 to retract through the action of spring 19, thus removing the brake shoe 17 from frictional engagement with the track 14.

Though I have described the structure of the illustrated embodiment in detail, it is to be understood that the operative elements may be designed in many different ways, and many specific constructions may be substituted for the one I have just described.

The foregoing detailed description has been given for purposes of explanation only and no unnecessary limitations are to be understood therefrom.

I claim:

1. A device for controlling the speed of a revolving door, comprising a governor connected with said door and arranged to rotate as said door revolves, braking means for checking the speed at which said door revolves, said braking means being normally in inoperative position, and power means independent of said door actuated by said governor when the governor has attained a predetermined speed of rotation for moving said braking means into operative position and for applying thereby a substantially constant braking force to the door so long as the speed of said door exceeds a predetermined value.

2. A device for controlling the speed of a revolving door, comprising a governor connected with said door and arranged to rotate as said door revolves, braking means including a hydraulic pressure system which is adapted to produce braking action when hydraulic pressure is applied to the system, and power means independent of said door actuated by said governor when the governor has attained a predetermined speed of rotation for applying hydraulic pressure to said system and for applying thereby a substantially constant braking force to the door so long as the speed of said door exceeds a predetermined value.

3. A device for controlling the speed of a revolving door, comprising a governor connected with said door and arranged to rotate as said door revolves, braking means including a hydraulic pressure system which is adapted to produce braking action when hydraulic pressure is applied to the system, an electric circuit including means associated with said governor and adapted to sensitize the circuit when said governor attains a predetermined speed of rotation, and means for applying hydraulic pressure to said system when said circuit is sensitized to apply thereby a substantially constant braking force to the door so long as the speed of said door exceeds a predetermined value.

4. A device for controlling the speed of a revolving door, comprising a governor connected with said door and arranged to rotate as said door revolves, braking means for checking the speed at which said door revolves, said braking means being normally in inoperative position, an electric circuit including a source of electrical energy, switch means associated with said governor for altering the flow of current in said circuit when said governor has attained a predetermined speed and for maintaining said altered flow while said governor is rotating above said predetermined speed, hydraulic means for moving said braking means into operative position and for maintaining it in operative position while hydraulic pressure is applied thereto, and means including a solenoid associated with said electric circuit for applying pressure to said hydraulic means

when said current through said circuit is in said altered condition.

5. A device for controlling the speed of a revolving door, comprising means normally in non-operating condition for applying a constant pressure to retard the speed of revolution of said door, and a governor connected with said door and arranged to rotate as said door revolves, said governor having spring-held members which are impelled by centrifugal force to move against spring tension as the speed of rotation of the governor increases, and means for conditioning said first-mentioned means for operation when said members have moved against spring tension to a predetermined position.

6. A device as set forth in claim 5 including means for altering the spring tension of said members to thereby alter the speed of rotation of said governor at which said retarding means is changed to operative condition.

7. A device for controlling the speed of a revolving door, comprising a circular disk at the top of said door which is concentric with the axis of revolution of said door and the edge of which provides a friction surface, a brake shoe adapted to be moved into frictional contact with said edge, a hydraulic cylinder having a piston which is responsive to hydraulic pressure within the cylinder for pressing said shoe against said edge, said piston being provided with a spring for urging it to withdrawn position so as to remove said shoe from frictional engagement with said edge when

hydraulic pressure is not applied to said cylinder, means for applying hydraulic pressure to said cylinder, electrical means which when actuated is adapted to energize said pressure-applying means, and means associated with said door which is responsive to the speed of revolution of said door above a predetermined speed for actuating said electrical means.

8. A device for controlling the speed of a revolving door, comprising a governor connected with said door and arranged to rotate as said door revolves, braking means adapted when actuated to apply a constant and predetermined amount of pressure against the door to check the speed thereof, said braking means being normally in inoperative position, an electric circuit including means associated with said governor and adapted to sensitize the circuit when said governor attains a predetermined speed of rotation, and means for actuating said braking means to place the same in operative position when said circuit is sensitized.

LOUIS E. TELBIZOFF.

REFERENCES CITED

The following references are of record in the file of this patent:

UNITED STATES PATENTS

Number	Name	Date
871,509	Jordan	Nov. 19, 1907
1,947,733	Peremi	Feb. 20, 1934