March 14, 1961 M. VON ARDENNE 2,975,277

ION SOURCE

Filed Jan. 24, 1956 2 Sheets-Sheet 1

FIG. 1

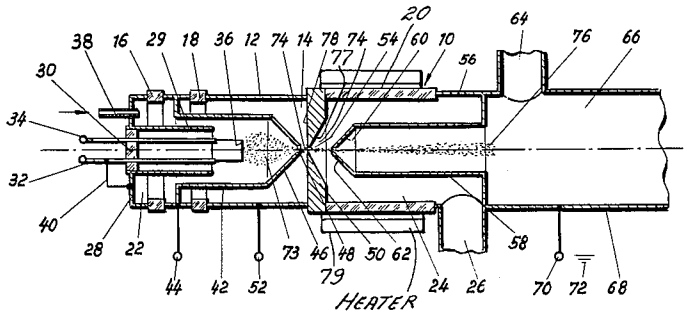

FIG. 2

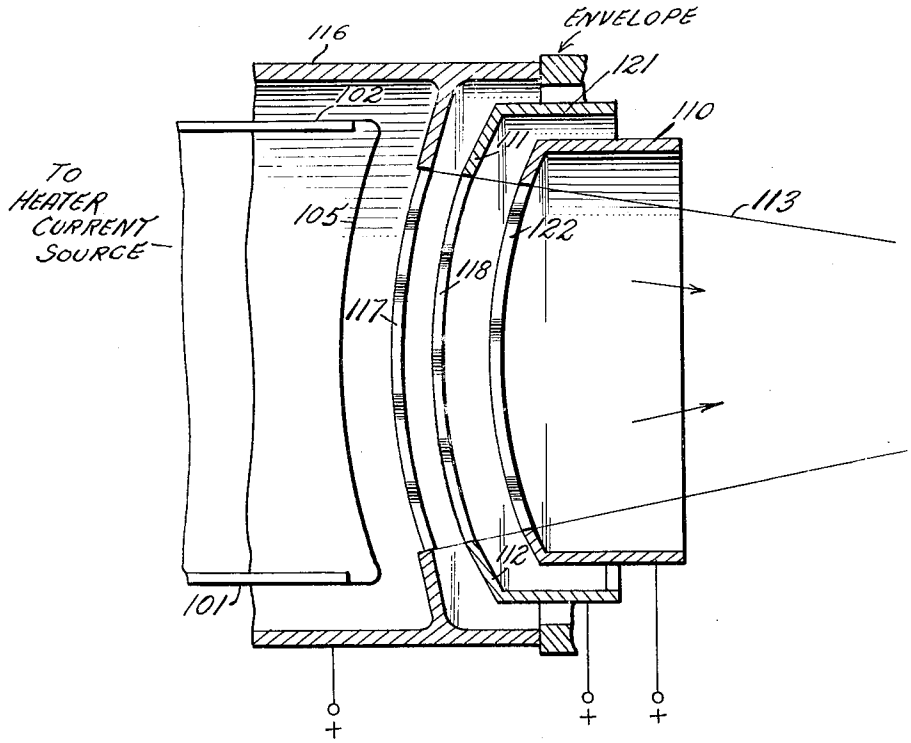

INVENTOR.
Manfred von Ardenne
BY
Attorney

March 14, 1961 M. VON ARDENNE 2,975,277

ION SOURCE

Filed Jan. 24, 1956 2 Sheets-Sheet 2

FIG.3

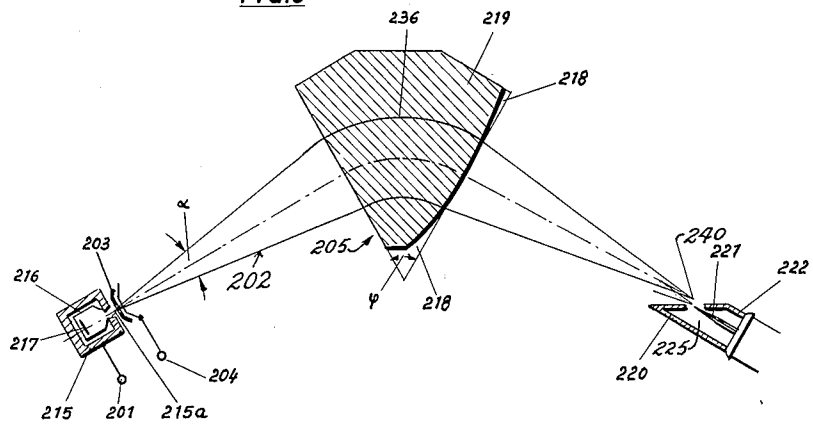

FIG.4

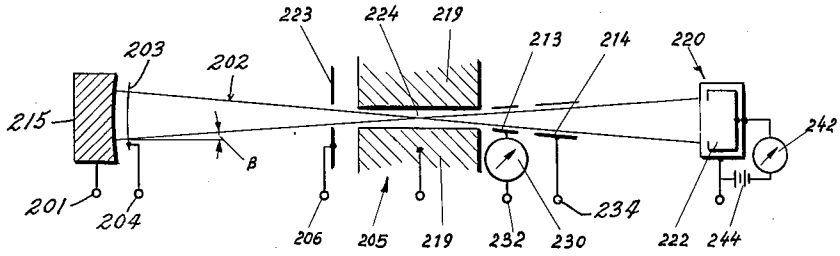

FIG.5

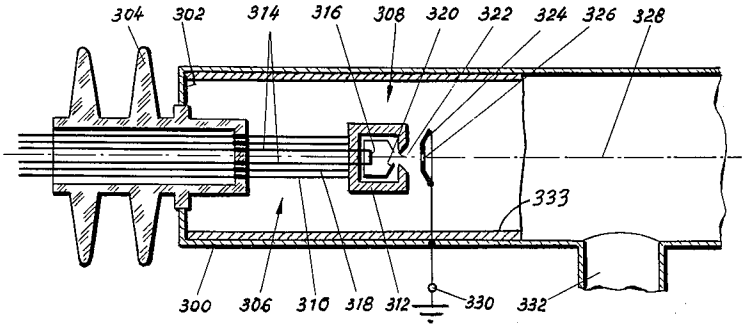

INVENTOR.
Manfred von Ardenne
BY
Attorney

United States Patent Office 2,975,277 Patented Mar. 14, 1961

2,975,277

ION SOURCE

Manfred von Ardenne, Dresden-Weisser Hirsch, Germany, assignor to VEB Vakuumonik Dresden, Dresden, Germany

Filed Jan. 24, 1956, Ser. No. 561,078

Claims priority, application Germany May 10, 1955

5 Claims. (Cl. 250—41.9)

The present invention relates to ion sources, and more particularly to an ion source for mass spectrometers and isotope sorting devices.

It is an object of the present invention to render convergent the ion streams produced by the ion source.

It is another object of the present invention to provide a convergent ion stream without an auxiliary magnetic field.

It is a further object of the present invention to provide an ion source to render a mass spectrometer or isotope sorting device more economical.

Other objects and advantages of the present invention will be apparent from the following detailed description thereof in connection with the accompanying drawings showing, by way of example, some embodiments of the present invention. In the drawings

Fig. 1 is a diagrammatic section of an ion source according to a first embodiment of the present invention,

Fig. 2 is on a larger scale a diagrammatic view of parts of a second embodiment of the present invention,

Fig. 3 is a diagrammatic view of an isotope sorting device according to the present invention,

Fig. 4 is a diagrammatic view, partly in section and seen at right angles to Fig. 3, of the isotope sorting device shown in Fig. 3,

Fig. 5 is a diagrammatic section of a further embodiment of an ion source according to the present invention.

Referring now to the drawings and first to Fig. 1, an ion source is shown which comprises a vessel generally denoted by 10 which is limited by cylindrical walls such as 12 consisting of metal and defining compartments such as an intermediate compartment 14. Rings 16, 18 and a cylindrical wall 20 consisting of insulating material separate, respectively, a first compartment 22 from the intermediate compartment 14 and a compartment 24 provided with a connection 26 leading to a differential vacuum pump (not shown).

The first compartment 22 is closed by a conductive end wall 28 having a conductive cylindrical part 29 and an electrically insulating part 30 which supports lead-in conductors 32 and 34 for a cathode 36. A gas supply pipe 38 connects a gas source indicated by the arrow with the first compartment 22. The lead-in conductor 32 is connected by a conductive connection 40 with the conductive end wall 28.

An intermediate electrode 42 connected with a terminal 44 is arranged in the chamber formed by the first and intermediate compartments 22 and 14. The intermediate electrode 42 is provided with a conical member 46 having a small opening 48 at the apex thereof. An anode 50 is arranged so as to form the closure of the intermediate compartment 22 and is conductively connected with a terminal 52 to which a relatively high anode potential is applied. The anode 50 is wedge-shaped in cross section and provided with a central opening 54 being aligned with the opening 48 of the conical member 46.

The wall 56 of the vessel 10 joining up with the insulating wall 20 and enclosing the compartment 24 is limited

by a cylindrical electrode 58 provided with a conical part 60 having a small centered opening 62 aligned with the openings 48 and 54. Behind the cylindrical electrode 58 a connection 64 leads to the main pump (not shown), the inner hollow space of the cylindrical electrode 58 communicating with a main evacuated space or compartment 66 forming part of the vessel 10. The walls 68 of the main evacuated compartment 66 are connected with a terminal 70 connected in turn with a voltage source (not shown) accelerating the ions in the main compartment 66 and being grounded at 72.

The operation of this device is as follows:

The interior of the vessel 10 is subdivided into four compartments, viz. the first compartment 22 housing the cathode 36 and closed by the intermediate electrode 42 and the conical member 46 thereof, the intermediate compartment 14 limited on one side by the intermediate electrode 42 and the conical member 46 thereof and on the other side by the anode 50, the compartment 24 provided with the connection 26 leading to the differential vacuum pump (not shown), and the main compartment 66 provided with the connection 64 leading to the main pump (not shown). Within the different compartments consecutively decreasing gas pressures are maintained by the gas entering through the supply pipe 38, the differential pump (not shown) connected to the compartment 24, and the main pump (not shown) connected to the main compartment 66. For instance, in the first and intermediate compartments 12 and 14 the pressure may amount to 10^{-2} mm. Hg, in the compartment 24 to 5.10^{-4} mm. Hg, and in the main compartment 66 to 5.10^{-6} mm. Hg. The wall 28 of the first compartment 22, the wall 12 of the intermediate compartment 14, and the wall 56 of the compartment 24 are electrically insulated from one another by the insulating members 16, 18, and 20 so that different potentials may be applied by the terminals 44, 52, and 70 to the respective walls of the compartments and to the intermediate electrode 36, the anode 50, and the cylindrical electrode 58 as set forth more in detail hereinabove. For example, a potential of about +300 volts is applied to terminals 44 and 52, and a potential of about —20 kv. is applied to the terminal 70, all with respect to the cathode potential. With a suitable choice of series resistance, the potential at terminals 44 and 52 falls off by about 60 to 80 volts after ignition of the arc.

The plasma or positive column 73 of the gas discharge set up between the cathode 36 and the anode 50 is concentrated by the narrow opening 48 of the conical member 46 of the intermediate electrode 42 and is highly concentrated at 74 in front of the opening 54 of the anode 50. Behind the opening 54 the plasma forms a cone 76 passing through the opening 62 of the conical part 60 of the cylindrical electrode 58 in which the cone 76 expands further as shown in Fig. 1.

A plasma having a high stability may be obtained according to the invention in different ways, for instance, by heating the cathode 36 normally and limiting the current by the space charge, or by heating the cathode 36 a little less and relying for the limitation of the current on saturation phenomena.

In the first case, that is limitation of the current by space charge, a kind of bubble consisting of a double layer is formed in which the electrons of the plasma coming from the neighborhood of the cathode are accelerated and focused on the opening 48. The electrons accelerated in the double layer ionize very strongly the neutral gas particles within this space and concentrate the plasma very strongly as shown at 74 in front of the ion emitting opening 54 of the anode 50, thus increasing the density of the ion emission current.

In the second case, that is when the current is limited

by saturation, the electrons required for a vigorous ionization of the neutral gas are generated within the cathode drop itself. The cathode drop is increased artificially to 50–100 volts by heating the cathode **36** to a temperature below the saturation temperature, the emission density being uniform.

If desired, the intermediate electrode **42** may be connected with the anode **50** by a resistor (not shown) having a resistance value of several hundred ohms.

The electrode **58** should be so arranged with respect to the anode **50** that the opening **62** of the conical part **60** is arranged at a distance of a few millimeters from the opening **54** of the anode **50**. The voltage of the voltage source (not shown) connected to the terminal **70** should preferably be between —10 and —60 kilovolts so that a high sucking gradient is achieved and, furthermore, the anode **50** should be shaped on the side turning toward the conical member **60** so that a plasma limit favorable from the ion-optical point of view is formed, the ion beam following a path having an as small as possible divergence notwithstanding the high density thereof. The geometry of the anode and the electrode **60**, **58** should follow the rules laid down by Pierce in his text "Zur Electroden-Geometrie," published by Deutscher Verlag der Wissenschaften Berlin, 1956, volume 1, pages 514 to 521.

The angle included by the conical face **77** of the anode and the opposite face **78** thereof amounts preferably to 22°.

If the ion emitting opening **54** of the anode has a very small area, for instance, an area amounting to 0.1 square millimeter or less, the density of the ion emission will be observed to decline after a certain time even when the gas discharge operates in a constant manner. This is due to the fact that the ion beam produces gradually insulating condensate layers on the surfaces adjoining the emitting opening **54**, said condensate layers originating from residual organic vapors which are almost always present. On these layers polarizing charges are formed which diminish the emission of ions owing to the polarity thereof. This disturbing phenomenon may be avoided according to the invention by manufacturing the anode **50** from platinum sheet metal which is heated either permanently or periodically by the braking energy of the discharging electrons or by external heating means **79**. By this heating the insulating condensate layers are transformed into conductive carbon coatings which prevent the formation of the disturbing polarizing charges.

A great advantage of the described form of the discharge consists in that it assures excellent qualities of the ion source operating without guiding the electrons by a magnetic field. This fact is of particular importance for the economy of the total arrangement, when the latter is not axially symmetrical but designed as shown in Fig. 2 with slit-formed openings of the intermediate electrode, the anode provided with the emitting opening, and the collector electrode.

In the embodiment part of which is shown in Fig. 2, an intermediate electrode **116** encloses the linear cathode **105** secured to suitable current conductors **101** and **102**. The intermediate electrode **116** is provided with a slit-formed opening **117** which is arranged so as to be aligned with the slit-formed opening **118** of the electrode or anode **121**. The slit **118** of the electrode or anode **121** has ends **111** and **112** including with the principal plane of the electrode or anode **121** angles of, for instance, 22° so that a beam collecting geometry of the electrode or anode **121** according to Pierce's results. The suction electrode **110** is formed with a slit-formed opening **122** aligned with the slits **117** and **118**. The elements **105–121** correspond to the like named elements of Fig. 1.

The incandescent cathode **105** is designed as a band or wire having a uniform density of emission. In dimensioning the slit **117** of the intermediate electrode **116** it should be borne in mind that the density of the plasma will be the higher, the smaller the width of the slot **117** is. However, the width of the slot **117** cannot be diminished indefinitely because the ignition voltage is increased critically. Practical tests have shown that a width of the slot **117** amounting approximately to 3 millimeters yields a favorable compromise between the concentration of the plasma and the increase of the ignition voltage.

Since the ion source shown in Figs. 1 and 2 operates without a magnetic field it is an easy matter to attribute to the source such a shape of the ion emitting surface or plasma limiting layer that the ion beam **113** leaves the source at any desired direction. For example, in Fig. 2 the geometrical form of the system renders the sucked off ion beam convergent in the principal plane of the slits particularly by a suitable choice of the radii of curvature of the electrode in the main direction of the slits.

Referring now to Figs. 3 and 4 in which the vessel corresponding to the vessel **10** shown in Fig. 1 is omitted, an isotope separator is shown comprising a furnace **215** connected to a terminal **201**. An emitting slot **215***a* is arranged in the front wall of the furnace **215** serving as the anode of the discharge. Inside the furnace **215** is arranged an intermediate electrode **216** provided with a slit and inside the intermediate electrode **216** is arranged a cathode **217** so that the assembly of the elements **215**, **216**, and **217** forms an ion gun. This furnace system yields a temperature on the surfaces of the cathode **217** and the intermediate electrode **216** which is so high that no condensation of the vapors is encountered on the surfaces. The ion rays produced within the furnace leave the same as a beam **202** and pass the electrode system **203** connected to the terminal **204**. The beam has a diverging angle α in the plane of Fig. 3 and forms an angle in the plane of Fig. 4 half of which differs from a right angle by an angle β so that the beam **202** converges and forms a crossover **224** in the middle of the pole pieces **219** of a magnet generally denoted by **205**. A diaphragm **223** is arranged between the furnace **215** and the magnet **205** and is connected with a terminal **206**.

The magnet **205** is provided with a curved lateral surface **218** the purpose of which will be explained later.

After the ion beam **202** has passed the magnet **205** it passes the electrode **213** and the electrode **214** arranged laterally to the path thereof.

The beam **202** of ions enters finally a pocket generally denoted by **220** and including a compartment **225** for catching the relatively light isotope and a compartment **222** for catching the relatively heavy isotope, a knife-shaped wall **221** separating the compartments **225** and **222** from each other.

The operation of this device is as follows:

The beam **202** of the ions emitted by the slot **215***a* of the furnace **215** is restricted by the diaphragms **203** and **223** so that it enters the space of the separating magnet **205** with a very small cross section in one direction and is deflected so as to form the crossover **224** situated approximately at the center of the magnet **205** as shown in Fig. 4. The diaphragm **223** prevents any ions from directly impinging on the end faces of the pole pieces **219** of the magnet **205**: The pole pieces **219** are approximately sector shaped and the sides thereof include an angle of approximately 60° (Fig. 3). The pole pieces **219** are relatively small so that the consumption of iron and copper for magnet **205** is relatively low and much reduced against the corresponding values of similar separating magnets known in the art which have weight of 200 tons whereas a magnet according to the invention has the total weight of about 20 tons.

Furthermore, frequently considerable difficulties are experienced in magnetic separators which are due to the flowing off of the parasitic electron currents formed by the ion beam passing through the residual gas through the ion accelerating distance of the ion source. These parasitic currents have the volt velocity of the full ion

accelerating voltage and intensities of 10–30 milliamps. Thus they cause frequently a melting of the ion source electrodes and prevent often the application of a high potential gradient along the path of the electrons. These difficulties are overcome by the electrodes **213** and **214** laterally arranged to the electron beam which suck off the parasitic electrons from the electron beam. Preferably a measuring instrument **230** is connected in series with the electrode **213** and a terminal **232**, whereas the electrode **214** is directly connected to the terminal **234** from which the parasitic currents are taken off. The electrodes **213** and **214** are preferably kept at a positive potential against the potential of the beam **202** and designed with a relatively large surface so that a critical overheating of the same is avoided.

The path of the ion beam **202** is curved at **236** by the magnet **205** as shown in Fig. 3 and rendered convergent by the curved lateral surface **218** so as to focus the ion beam on the entrance slit **240** of the pocket **220** in which the relatively light isotope of the gas is separated from the relatively heavy isotope thereof in the compartments **223, 222**. Preferably each compartment is connected with a measuring or counting instrument such as **242** (Fig. 4) connected in series with a battery **244**. This instrument measures the relative number of ions entering the compartment with which the instrument **242** is connected.

Isotope separation is effected in accordance with Fig. 3 by means of the image of a symmetrical sector field, as is known in the art. Such arrangements have been used in mass spectrographs and mass spectrometers, for example in the Nier mass spectrometer. The isotopes are separated thereby in that the image of the emission slot is formed through the sector field in the place of the mounting. This image formation takes place at a given predetermined potential only for a certain predetermined ion mass. By changing the magnetic field strength ions of different mass can be formed as images successively in the gap.

The particular shape of the magnetic pole structure used, having an edge which is curved on one side, serves the purpose of eliminating image errors. This arrangement has been chosen in accordance with the publication of Smythe-Rumbaugh-West, Physical Review, vol. 45, page 724, (1934).

Fig. 5 shows another embodiment of the ion source. An evacuated vessel **300** consisting of metal is connected at one end wall **302** thereof with a hollow insulator **304** which carries a plurality of conductors generally denoted by **306** which are rigid enough for keeping the elements of the furnace or ion gun **308** in position. One conductor **310** is connected to the casing **312** of the furnace **308** which serves as an anode, two conductors **314** are connected to the cathode **316**, and another conductor **318** is connected to the intermediate electrode **320**. The design of the furnace corresponds to that of the furnace **215** shown in Fig. 3. In front of the opening **322** of the furnace **308** is arranged an electrode **324** provided with an opening **326** being aligned with the opening **322** for letting pass the beam **328** of electrons emitted by the furnace **308**. The electrode **324** is electrically connected with the metal tube **300** which in turn is connected to ground by the connection **330**. The connections **310, 314**, and **318** connected, respectively, with the anode **312**, the cathode **316**, and the intermediate electrode **320** are kept at relatively high potentials. For example the connection **310** to the anode may have an accelerating potential of about 30 to 50 kv. The remaining connection **318** to the intermediate electrode **320** and the connection **314** to the cathode **316** differ by about 10 volts, and are also at about the same potential of 30 to 50 kv. The vessel **300** is provided with a connecting piece **332** leading to a pump (not shown). This device may be used with advantage in magnetic isotope separators.

In order to secure a high stability of the plasma preferably a portion of the walls of the gas discharge chamber is covered with a sound absorbing material **333** which should be heat resistant. The high potentials in the vessel give rise to bursts which set up pressure waves in the plasma within the acoustic frequency range if the walls of the vessels are allowed to reflect the pressure waves back and forth. The sound absorbing materials on the walls of the vessel reduce these reflections and thereby reduce the vibrations within the plasma.

I have described hereinbefore preferred embodiments of an ion source and/or a magnetic isotope separator. However, I wish it to be understood that many changes, substitutions of equivalents, and modifications may be made in the embodiments shown in the drawings without departing from the spirit and gist of the invention which is defined by the claims attached hereto.

I claim:

1. In a non-magnetic ion source, in combination: a vessel containing a gas having a low pressure, means including a cathode and an anode electrode for maintaining a plasma of a gas discharge in said low pressure gas in said vessel, an intermediate electrode arranged in said vessel, said intermediate electrode having an opening constricting the cross section of said plasma of said gas discharge maintained in said vessel, said anode electrode having an ion emitting opening, means for biasing said intermediate and anode electrodes so that they serve as anodes for said gas discharge, said constricting opening of said intermediate electrode being arranged directly and immediately in front of said ion emitting opening of said anode electrode so as to constrict said plasma in the vicinity of said ion emitting opening of said electrode and electrostatic means to remove ions from the space between said openings in a direction axial to the opening.

2. In an ion source, in combination: a vessel containing a gas having a low pressure, non-magnetic means including a plurality of electrodes arranged in said vessel for maintaining an ion producing plasma of a directed gas discharge in said vessel, said electrodes being axially symmetrical and including an intermediate electrode and an anode, said intermediate electrode having means including an axially symmetrical opening constricting the cross section of said ion producing plasma of said directed gas discharge maintained in said vessel, said anode having an axially symmetrical ion emitting opening having a total effective area less than a square millimeter, said axially symmetrical opening in said intermediate electrode being arranged in the direction of said directed gas discharge directly in front of and so close to said axially symmetrical ion emitting opening of said anode to constrict said plasma in the vicinity of said ion emitting opening of said anode and electrostatic means for removing ions from the space between said openings through the anode opening in a direction axial thereto.

3. In an ion source as claimed in claim 2, an ion accelerating electrode arranged in the direction of said directed gas discharge behind said anode, said accelerating electrode having an axially symmetrical opening arranged in said direction of said directed gas discharge behind said axially symmetrical opening of said anode.

4. In an ion source, in combination: a vessel containing a gas having a low pressure, means for maintaining an ion producing plasma of a gas discharge in said low pressure gas in said vessel, an intermediate electrode arranged in said vessel, said intermediate electrode having an opening constricting the cross section of said plasma of said gas discharge maintained in said vessel, and a platinum electrode arranged in said vessel, means for heating said platinum electrode to carbonize insulating layers thereon, for carbonizing insulating layers thereon when heated to an elevated temperature, said platinum electrode having an ion emitting opening, said constricting opening of said intermediate electrode being arranged directly in front of said ion emitting opening of said

platinum electrode so as to constrict the cross section of said plasma in the space between said intermediate electrode and of said platinum electrode.

5. In an ion source as claimed in claim 1, and means for reducing vibrations of the plasma in the acoustic frequency range including sound absorbing materials arranged on the inside of the wall of said vessel.

References Cited in the file of this patent

UNITED STATES PATENTS

2,570,124	Hernqvist	Oct. 2, 1951
2,636,990	Gow et al.	Apr. 28, 1953
2,677,770	Smyth	May 4, 1954
2,704,335	Luce	Mar. 15, 1955
2,710,354	Inghram et al.	June 7, 1955
2,712,072	Sayers	June 28, 1955
2,715,683	Backus et al.	Aug. 16, 1955
2,736,809	Bacon	Feb. 28, 1956
2,785,311	Lawrence	Mar. 12, 1957

OTHER REFERENCES

Kerwin; Mass Spectroscopy in Electronics and Electron Physics, vol. VIII, 1956, Academic Press Inc., New York, N.Y. pp. 200–204, 216, 247 relied on.