United States Patent [19]

Vitacco

[11] **Des. 248,950**

[45] ** **Aug. 15, 1978**

[54] **AUXILIARY TELEPHONE-RECEIVER SADDLE**

[76] Inventor: **Richard L. Vitacco,** 1653 Thurston Ave., Racine, Wis. 53405

[**] Term: **14 Years**

[21] Appl. No.: **675,588**

[22] Filed: **Apr. 9, 1976**

[51] **Int. Cl.** ..... **D14—03**

[52] **U.S. Cl.** ..... **D14/59;** 179/146 R

[58] **Field of Search** ..... 179/100 R, 100 D, 178, 179/146 R, 179; D14/65, 59

[56] **References Cited**

U.S. PATENT DOCUMENTS

D. 154,762	8/1949	Forkapa	D14/59
D. 195,209	5/1963	Mourra	D14/59
2,693,509	11/1954	Selee	179/146 R
2,703,823	3/1955	Orms	179/146 R
3,022,386	2/1962	Ireland	179/146 R
3,654,405	4/1972	Hanson et al.	179/146 R

Primary Examiner—Bernard Ansher

Attorney, Agent, or Firm—Axel H. Johnson

[57] **CLAIM**

The ornamental design for an auxiliary telephone-receiver saddle, as shown and described.

DESCRIPTION

FIG. **1** is a side elevational view of an auxiliary telephone-receiver saddle showing my design;
FIG. **2** is a front elevation thereof;
FIG. **3** is a top front perspective view thereof, and
FIG. **4** is a bottom rear perspective view thereof.

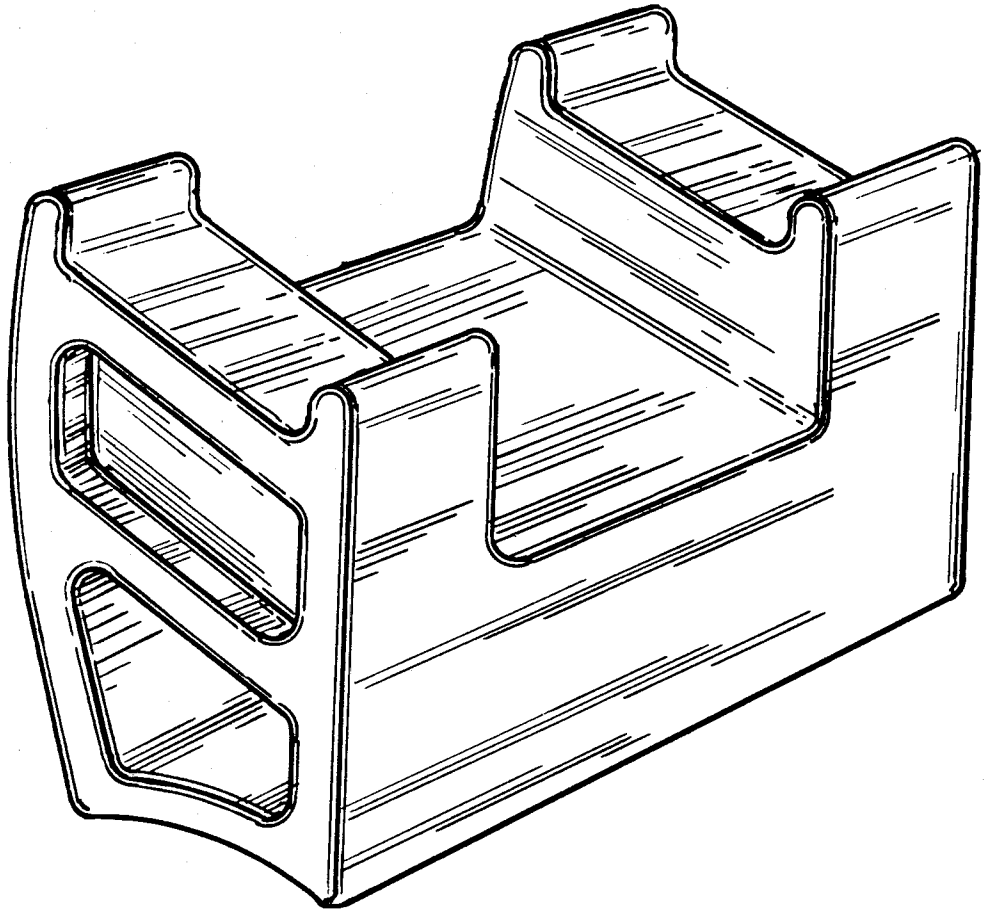

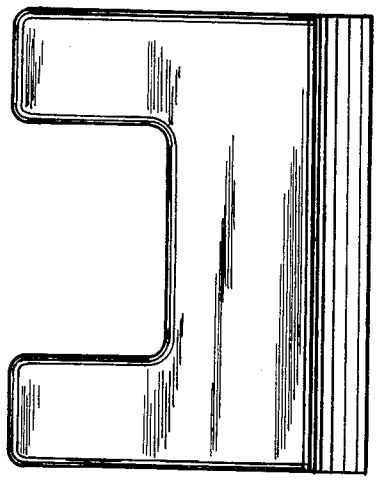

FIG. 2

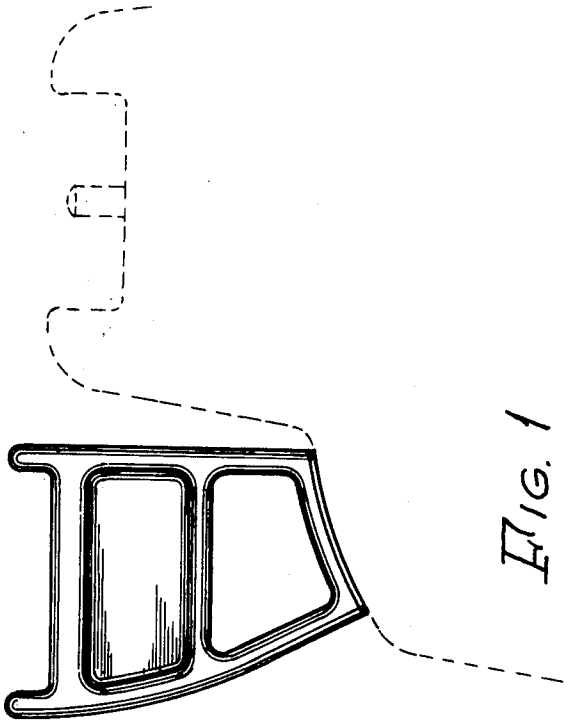

FIG. 1

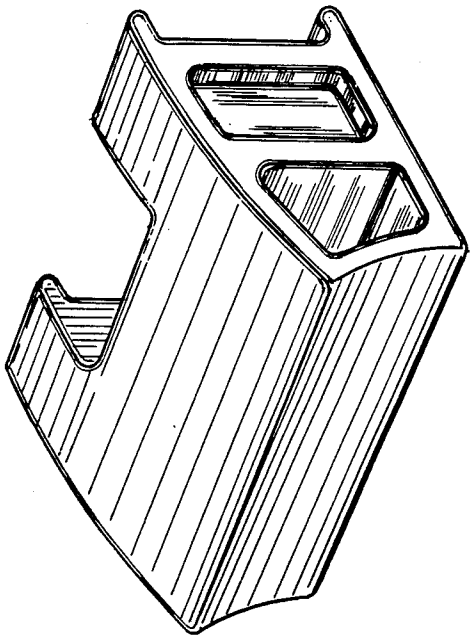

FIG. 4

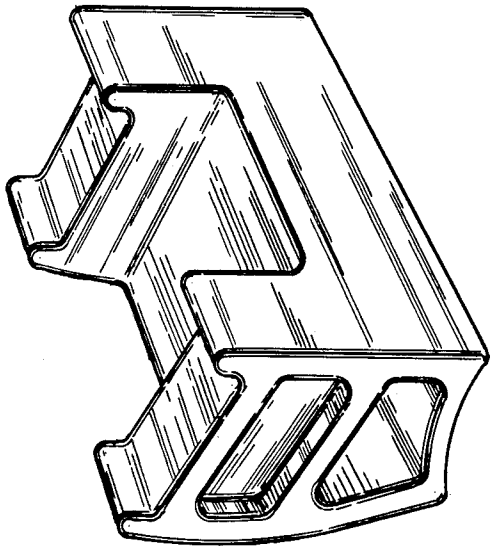

FIG. 3