Innovation, Sciences et Développement économique Canada
Office de la Propriété Intellectuelle du Canada

Innovation, Science and Economic Development Canada
Canadian Intellectual Property Office

CA 3078041 C 2022/08/09

(11)(21) 3 078 041

(12) BREVET CANADIEN
CANADIAN PATENT

(13) C

(22) Date de dépôt/Filing Date: 2016/01/08

(41) Mise à la disp. pub./Open to Public Insp.: 2016/07/14

(45) Date de délivrance/Issue Date: 2022/08/09

(62) Demande originale/Original Application: 2 973 486

(30) Priorité/Priority: 2015/01/09 (US14/593,570)

(51) Cl.Int./Int.Cl. *E05B 63/04* (2006.01)

(72) Inventeurs/Inventors:
LEHNER, JACK R., JR., US;
JANIK, JOSEPH, US

(73) Propriétaire/Owner:
SCHLAGE LOCK COMPANY LLC, US

(74) Agent: FASKEN MARTINEAU DUMOULIN LLP

(54) Titre : GARNITURE DE SORTIE A MANIEMENT DE POIGNEE SIMPLIFIE
(54) Title: EXIT TRIM WITH SIMPLIFIED LEVER HANDING

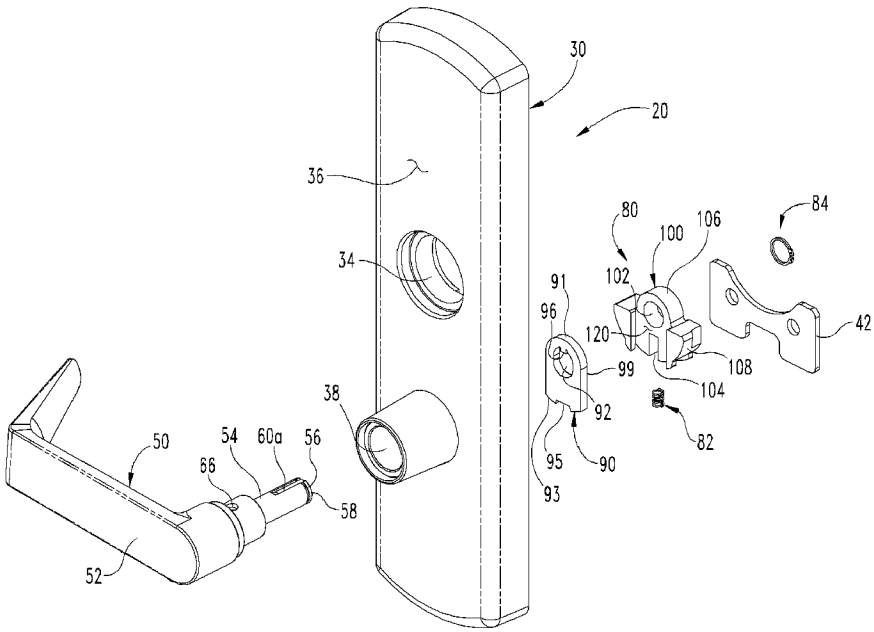

(57) Abrégé/Abstract:
An exit trim that permits simplified changing of the handing of a lever handle between a left hand and a right hand orientation. The handing orientation of the lever handle can be repositioned without disassembling the exit trim or removing components positioned within the exit trim.

ABSTRACT

An exit trim that permits simplified changing of the handing of a lever handle between a left hand and a right hand orientation. The handing orientation of the lever handle can be repositioned without disassembling the exit trim or removing components positioned within the exit trim.

Date Reçue/Date Received 2020-04-15

EXIT TRIM WITH SIMPLIFIED LEVER HANDING

FIELD

The present disclosure generally relates to an exit trim arranged to simplify reversing the handing of a lever handle for opening a door, and more specifically to an exit trim configured to permit selectively aligning the lever handle for operation with either a left handed or right handed opening door. The present disclosure further generally relates to a designated component that fails in response to an over-turn force applied to the lever handle to prevent damage to interior components of the exit trim.

BACKGROUND

Lever handles for doors can be repositioned approximately 180 degrees apart depending on whether the lever handle will be used on a door that opens from the left hand side or a door that opens from the right hand side. Typically lever handles are changed between right hand and left hand orientations by removing and reorienting portions of the handle assembly and/or disassembling the exit trim to gain access to and re-orienting adjustable internal components to allow operation of the internal mechanisms when the handing is reversed. These can be both time consuming and cumbersome for the exit trim installer, particularly in a field installation situation. In addition, attempts at unauthorized entry can result in damage to the internal components of the exit trim when an excessive over-turn force is applied to a lever handle. As a result, the damaged internal components must be identified and then replaced to allow the door to function properly. Accordingly there remains a need for further contributions in this area of technology.

SUMMARY

Certain embodiments of the present disclosure include an exit trim assembly configured for simplified changing of the handing of a lever handle associated with the exit trim assembly to selectively operate with either right hand or left hand opening doors. Other embodiments include an exit trim assembly with at least one designated component that secures the lever handle to the exit trim assembly in the desired left or right hand orientation and also that fails in response to an over-turn force applied to the lever handle to prevent damage to other components of the exit trim assembly. Still other embodiments include apparatuses, systems, devices, hardware, methods, and combinations for the same. Further embodiments, forms, features, aspects, benefits, and advantages of the present application shall become apparent from the description and figures provided herewith.

Date Reçue/Date Received 2021-11-12

Hence, according to a broad aspect, there is provided a handle assembly, comprising: an escutcheon; an input cam rotatably mounted to the escutcheon, the input cam comprising an aperture and a bore extending from the aperture; a lever handle extending into the aperture, the lever handle comprising a first opening and a second opening angularly spaced from the first opening, the lever handle having a first orientation relative to the input cam in which the first opening is an aligned opening that is aligned with the bore, the lever handle having a second orientation relative to the input cam in which the second opening is the aligned opening that is aligned with the bore; and a coupler being movably mounted to the input cam, the coupler having a coupling position in which the coupler extends into the aligned opening and couples the lever handle to the input cam, the coupler having a decoupling position in which the coupler is removed from the aligned opening and the lever handle is rotatable relative to the input cam between the first orientation and the second orientation. According to another broad aspect, there is provided a handle assembly, comprising: an escutcheon; an input cam rotatably mounted to the escutcheon for rotation about a rotational axis; a lever handle selectively coupled with the input cam; and a coupler selectively coupling the lever handle with the input cam, the coupler having a coupling position in which the coupler couples the lever handle with the input cam, the coupler having a decoupling position in which the lever handle is rotatable relative to the input cam between a first orientation and a second orientation, wherein the coupler is mounted for movement transverse to the rotational axis between the coupling position and the decoupling position.

BRIEF DESCRIPTION OF THE DRAWINGS

The description herein makes reference to the accompanying drawings where like reference numerals refer to like parts throughout the several views.

Figs. 1A and 1B are perspective views of a portion of an exit trim assembly according to one embodiment of the present disclosure.

Figs. 2A and 2B are elevation views of the exit trim assembly of Figs. 1A and 1B with the lever handle in a left hand orientation and a right hand orientation, respectively.

Fig 3 is an exploded perspective view of the exit trim assembly of Figs. 1A-1B looking toward an exterior of the escutcheon housing.

Fig. 4 is another exploded perspective view of the exit trim assembly of Figs. 1A-1B looking toward an interior of the escutcheon housing.

Date Reçue/Date Received 2021-11-12

Figs. 5A and 5B are a perspective view and end elevation view, respectively, of a spindle portion of the lever handle.

Fig. 6 is a perspective view of the exit trim assembly showing a tool access to the locking mechanism in the input cam assembly to permit reversal of the handing of the lever handle.

Figs. 7A and 7B are sectional views of an input cam assembly of the exit trim assembly engaged and disengaged, respectively, to a spindle portion of the lever handle.

Fig. 8 is a sectional view of another embodiment input cam assembly.

Figs. 9A and 9B are front and side elevational views, respectively, of a biasing member of the input cam assembly of Fig. 8.

Fig. 10 is a front elevational view of a locking member of the input cam assembly of Fig. 8.

Fig. 11 is an exploded perspective view of another embodiment input cam assembly configured to permit reversal of the handing of the lever handle.

Fig. 12 is an exploded perspective view of the exit trim assembly with the input cam assembly of Fig. 11 looking toward an exterior of the escutcheon housing.

Fig. 13 is another exploded perspective view of the exit trim assembly with the input cam assembly of Fig. 11 looking toward an interior of the escutcheon housing.

Fig. 14 is an exploded perspective view of another embodiment input cam assembly configured to permit reversal of the handing of the lever handle.

Fig. 15 is an exploded perspective view of the exit trim assembly with the input cam assembly of Fig. 14 looking toward an exterior of the escutcheon housing.

Fig. 16 is another exploded perspective view of the exit trim assembly with the input cam assembly of Fig. 14 looking toward an interior of the escutcheon housing.

DETAILED DESCRIPTION OF EMBODIMENTS

Variants, examples and preferred embodiments of the invention are described hereinbelow For purposes of promoting an understanding of the principles of the invention, reference will now be made to the embodiments illustrated in the drawings and specific language will be used to describe the same. It will nevertheless be understood that no limitation of the scope of the invention is thereby intended, such alterations and further modifications in the illustrated device, and such further applications of the principles of the invention as illustrated therein being contemplated as would normally occur to one skilled in the art to which the invention relates.

Date Reçue/Date Received 2021-11-12

Referring now to Figs. 1A and 1B, an exit trim assembly 10 according to the present disclosure is illustrated therein. The exit trim assembly 10 can be configured for a door 20 or similar moveable structures that are selectively locked to fixed structures with one or more of a latching mechanism and a locking mechanism (not shown.) In one embodiment, door 20 is of a type with a panic bar (not shown) on the side of the door that is opposite exit trim assembly 10. Exit trim assembly 10 includes an escutcheon housing 30 defining an interior 32, a first opening 34 through a wall 36 of housing 30 to receiving a locking mechanism, and a second opening 38 through wall 36 to receive a portion of lever handle 50. First opening 34 is optional and can be used for mounting of a lock or key.

The interior 32 of escutcheon housing 30 houses a guide post assembly 40, an endplate 42, and a slider mechanism 70 (Fig. 6) that are operable with an input cam assembly 80 through lever handle 50 to operate the latch mechanism to open and close door 20. As further shown in Figs. 2A and 2B, lever handle 50 includes a handle portion 52 that is grasped by the user to rotate the spindle portion 54, which extends from and is fixed to handle portion 52 to operate the latch mechanism.

In the illustrated embodiment, handle portion 52 extends in a non-perpendicular orientation to an adjacent edge 22 of door 20 with lever handle 50 in either the left hand orientation of Fig. 2A or the right hand orientation of Fig. 2B. In a particular embodiment, input cam assembly 80 orients handle portion 52 at a slight upward angle A from a perpendicular axis P that defines a perpendicular orientation with edge 22 in either of the left hand or right hand orientations. The slight upward deviation from a perpendicular orientation eliminates droop in handle portion 52 and improves aesthetics. In another embodiment, handle portion 52 extends perpendicular to edge 22 along perpendicular axis P.

Referring further to Figs. 3-4, further details of exit trim assembly 10 are shown in an exploded view. Spindle portion 54 is positionable through second opening 38 and engageable to input cam assembly 80 in interior 32 of housing 30 to couple lever handle 50 to the latch mechanism of the door 20. In the illustrated embodiment, input cam assembly 80 includes an input cam 100, a locking member 90, and a biasing member 82. In the illustrated embodiment, biasing member 82 is a coil spring, but any suitable biasing member is contemplated.

Date Reçue/Date Received 2020-04-15

Input cam 100 defines a first aperture 102 and locking member 90 defines a second aperture 92 that each receive spindle portion 54 of lever handle 50. In addition, input cam 100 defines a compartment 104 that receives biasing member 82. First aperture 102 is defined by a first body portion 106 of input cam 100, and compartment 104 is defined by a second body portion 108 of input cam 100. First body portion 106 is generally cylindrical and second body portion 108 is generally semi-cylindrical and projects laterally outwardly from first body portion 106. Input cam 100 further includes a recessed surface 120 in second body portion 106 that faces handle portion 54.

Locking member 90 is positioned in recessed surface 120 to form a low-profile input cam assembly 80. A support flange 94 extends from locking member 90 into compartment 104 of input cam 100, and biasing member 82 extends between support flange 94 and input cam 100 in compartment 104. The body 99 of locking member 90 extends between a first end 91 and an opposite second end 93. A locking projection 96 that removably engages spindle portion 54 in a desired one of the left hand and right hand orientations extends into aperture 92 adjacent first end 91. Aperture 92 is elongated to allow reciprocal movement of locking member 90 a sufficient distance related to spindle portion 54 to allow displacement of locking projection 96 from the respective locking recess 60a, 60b of spindle portion 54. A notch 95 is defined by second end 93 of locking member 90 to receive an engagement tool to allow reversing of lever handle 50, as discussed further below. A retaining ring 84 is removably engageable to a circumferential groove 56 adjacent an inner end 58 of spindle portion 54. Retaining ring 84 retains input cam assembly 80 on spindle portion 54.

As further shown in Figs. 5A and 5B, spindle portion 54 includes a first longitudinally extending locking recess 60a and a second longitudinally extending locking recess 60b that extend through inner end 58. First and second locking recesses 60a, 60b are positioned generally opposite one another on the outer perimeter or outer surface of spindle portion 54. One of the locking recesses 60a, 60b receives locking projection 92 to couple lever handle 50 to input cam assembly 80 in a desired orientation. Locking recesses 60a, 60b are not diametrically opposite one another, but are each slightly offset to a first side of a perpendicular axis 62. Perpendicular axis 62 defines diametrically opposite locations 62a, 62b in which handle portion 52 of lever handle 50 would be perpendicular to the edge 22 of door 20 if recesses 60a, 60b were centered

Date Reçue/Date Received 2020-04-15

on these locations 62a, 62b. However, in the illustrated embodiment, recesses 60a, 60b are not centered on locations 62a, 62b, but are slightly offset from these locations 62a, 62b to the same side of perpendicular axis 62. The offset locations of locking recesses 60a, 60b from the adjacent locations 62a, 62b permit handle portion 52 to be angled at angle A from a perpendicular orientation relative to edge 22 of door 20, as discussed above. In another embodiment, recesses 60a, 60b are centered on perpendicular locations 62a, 62b.

Spindle portion 54 may further include a bore 64 to receive a fastener 66 to secure spindle portion 54 to handle portion 52. In other embodiments, spindle portion 54 is fixed relative to handle portion 52, or formed as a one-piece construct with handle portion 52. In any configuration of lever handle 50, input cam assembly 80 is located in the interior 32 of the escutcheon housing 30 and, as shown in Fig. 6, is arranged so the locking member 90 is accessible with a tool 74 through a gap 72 formed between housing wall 36 and end plate 42. The engagement tool 74 can be manipulated into notch 95 to depress locking member 90 against the biasing member 82, removing locking projection 96 from the engaged recess 60a, 60b and allow a change of handing for lever handle 90.

Referring to Figs. 7A and 7B, there is shown locking member 90 in a locked positon and an unlocked position, respectively. In the locked position, locking projection 96 is biased toward and received in longitudinal locking recess 60a by biasing member 82. The tool 74 can be used to push locking member 90 and compress biasing member 82 between input cam 100 and support flange 94 to displace locking projection 96 from locking recess 60a. In this unlocked position, lever handle 50 can be rotated, such as from the position in Fig. 2A to the position in Fig. 2B, to align second longitudinal locking recess 60b with locking projection 96. Locking member 90 can then be released so that biasing member 82 displaces locking member 90 to position locking projection 96 in the second longitudinal locking recess 60b.

Figs. 8-10 show another embodiment input cam assembly 80' that is similar to input cam assembly 80, but includes a modified biasing member 82'. Biasing member 82' includes a plate-like body 83' that defines a third aperture 85' that receives spindle portion 54. Biasing member 82' further includes a spring tab 86' extending laterally outwardly from an end of body 83' of biasing member 82'. Locking member 90' is also modified from locking member 90 to include a

Date Reçue/Date Received 2020-04-15

passage 98' through body 99', with other components the same as locking member 90. Spring tab 86' extends through passage 98'. Input cam 100' includes a modified compartment 104' to receive spring tab 86' to couple locking member 90' between biasing member 82' and input cam 100' on spindle portion 54. In the illustrated embodiment, spring tab 86' extends through compartment 104', but could also terminate within compartment 104' in other embodiments.

As shown in Fig. 9B, spring tab 86' includes a laterally extending portion 86a' and a hook portion 86b' at an end of laterally extending portion 86a'. Hook portion 86b' compresses to allow insertion through passage 98' and compartment 104', and then decompresses when released to couple locking member 90' to input cam 100'. A tool, such as tool 74, can be used to depress locking member 90' in notch 95 and displace locking projection 96 from the aligned locking recess 60a, 60b by bending spring tab 86', which is configured to deflect to accommodate such displacement. The orientation of lever handle 50 can then be rotated to changing its handing as discussed above. Release of locking member 90' allows spring tab 86' to un-deflect and return locking projection 96 into the aligned locking recess 60a, 60b.

Referring now to Figs. 11-13, another embodiment input cam assembly 180 is shown. Input cam assembly 180 lacks a biasing member, but includes another embodiment locking member 190 that is configured to secure lever handle 50 in a desired one of the left hand and right hand orientations to input cam assembly 180. Input cam assembly 180 includes an input cam 200 that defines a first aperture 202 in a first body portion 204 to receive spindle portion 54, and a compartment 206 in a second body portion 208. Compartment 206 is in communication with first aperture 202 through a slot 210. In addition, second body portion 208 defines a bore 212 extending through second body portion 208 that opens at a bottom side 214 of second body portion 208 and at compartment 204.

Locking member 190 includes a head 192, a threaded shaft portion 194 extending from head 192, and a non-threaded shaft portion 196 extending from threaded shaft portion 194. Bore 212 receives threaded shaft portion 194 of locking member 190. Locking member 190 further incudes a lock nut 198 that is non-rotatably captured in compartment 206 of input cam 200, and which is threadingly engaged by threaded shaft portion 194 extending from bore 212. Non-threaded shaft portion 196 projects from locking member 190 into a receiving bore 60' of a

Date Reçue/Date Received 2020-04-15

spindle portion 54' to couple spindle portion 54' to input cam 200. Spindle portion 54' is similar to spindle portion 54 but includes receiving bore 60' rather than longitudinal locking recesses 60a, 60b.

Since receiving bore 60' extends through and opens at diametrically opposite sides of spindle portion 54', lever handle 50 is engageable in either the left or right hand orientations at a perpendicular orientation to the adjacent edge 22 of door 20. In order to reverse the handing of lever handle 50, head 192 can be accessed by a driving tool or key through gap 72 to unthread locking member 190 through lock nut 198 until non-threaded shaft portion 196 is withdrawn from receiving bore 160, allowing spindle portion 54' to rotate relative to input cam 200 so the handing of handle portion 52 can be reversed. Locking member 190 can then be threaded into lock nut 198 to re-position non-threaded shaft portion in receiving bore 60' through the opposite side opening of receiving bore 60'.

An additional feature of locking member 190 is that it can be configured to provide protections against an over-turn force that is applied to handle portion 52. An over-turn force, as used herein, is a turning force applied to handle portion 53 that is over a threshold turning force. For example, a shear feature 197, such as a reduced cross-sectional area, can be provided between threaded shaft portion 194 and non-threaded shaft portion 196. If a force in excess of the threshold turning force (over-turn force) is applied to handle portion 52, locking member 190 severs at shear feature 197, preventing the over-turn force from being transmitted to input cam 200 and transmitted to other internal components connected with input cam assembly 180.

Referring now to Figs. 14-16, another embodiment input cam assembly 280 is shown. Input assembly 280 is similar to input cam assembly 180, but lacks a lock nut 198. Rather, input cam assembly 280 includes a locking member 290 that is configured to threadingly engage another embodiment spindle portion 54'' in a threaded receiving bore 60'' to secure lever handle 50 in a desired one of the left hand and right hand orientations. Input cam assembly 280 includes an input cam 300 that defines a first aperture 302 in a first body portion 304 to receive spindle portion 54'', and a second body portion 308 that defines a bore 312 in communication with first aperture 302 and opening at a bottom side 314 of second body portion 308. Bore 312 can be configured to threadingly receive locking member 290.

Date Reçue/Date Received 2020-04-15

Locking member 290 includes a head 292, a threaded shaft portion 294 extending from head 292, and a tool engagement recess 296 at an end of threaded shaft portion 294 opposite head 292. A shear feature 297 along threaded shaft portion can be located at the shear line between spindle portion 54'' and input cam 300 in aperture 302 to provide a shear location that prevents transmittal of an over-turn force applied to handle portion 52 to input cam assembly 180. Threaded shaft portion 294 projects into a receiving bore 60'' of a spindle 54''. Spindle 54'' is similar to spindle 54' but includes a threaded receiving bore 60''. In the event locking member 290 is severed at shear feature 297, the severed part of threaded shaft portion 294 lodged in receiving bore 60'' can be removed by a driving tool rotating the severed part via tool engagement recess 296 to unthreaded the severed part from receiving bore 60''.

Since receiving bore 60'' extends through and opens at diametrically opposite sides of spindle portion 54'', lever handle 50 is engageable in either the left or right hand orientations at a perpendicular orientation to the adjacent edge 22 of door 20. In order to change the handing of lever handle 50, head 292 can be accessed by a driving tool or key through gap 72 to unthread locking member 290 until it is disengaged with spindle portion 54'', allowing the spindle portion 54'' to rotate relative to input cam 300 and the handing of lever handle 50 to be reversed. Locking member 290 can then be re-threaded into receiving bore 60'' to re-position threaded shaft portion 294 into receiving bore 60'' and rotatably couple the lever handle 50 to input cam assembly 280.

Various aspects of the present disclosure are contemplated. For example, one aspect includes an exit trim assembly for a door. The exit trim assembly includes an escutcheon housing defining an interior and at least one opening through the housing, and a lever handle extending from the housing in a first orientation. The lever handle includes a spindle portion and a handle portion extending from the spindle portion. The spindle portion extends through the at least one opening into the interior of the escutcheon housing. The spindle portion includes a first locking recess in an outer surface of the spindle portion and a second locking recess in the outer surface generally opposite the first locking recess. The exit trim assembly also includes an input cam positioned around the spindle portion in the interior of the escutcheon housing and a locking member positioned around the spindle portion in engagement with the input cam. The locking member includes a locking projection that is received in the first locking recess to couple the

Date Reçue/Date Received 2020-04-15

lever handle with the input cam so that rotation of the lever handle pivots the input cam. The exit trim assembly also includes a biasing member engaged to the input cam and the locking member to bias the locking projection into the first locking recess. The locking member is moveable against the bias to remove the locking projection from the first locking recess so that the lever handle is rotatable relative to the input cam and the locking member to position the handle portion in a second orientation substantially opposite the first orientation. The biasing member biases the locking projection into the second locking recess of the spindle portion when the locking member is released to re-engage the lever handle with the input cam in the second orientation.

In one embodiment, the locking member defines a first aperture for receiving the spindle portion of the lever handle and the locking projection extends into the first aperture. In a refinement of this embodiment, the input cam includes a first body portion defining a second aperture therethrough for receiving the spindle portion of the lever handle and the input cam further includes a second body portion defining a compartment. The locking member includes a support flange that extends into the compartment, and the biasing member extends between the input cam and the support flange in the compartment to bias the locking projection of the locking member into an aligned one of the first and second locking recesses. In a further refinement, the locking member extends between a first end and an opposite second end, and the locking projection is located adjacent the first end. The second end defines a notch for receiving an engagement tool to displace the locking member against the biasing member to remove the locking projection from an engaged one of the first and second locking recesses of the spindle portion.

In another embodiment, the input cam includes a recessed surface facing the handle portion of the lever handle and the locking member is positioned in the recessed surface. In refinement of this embodiment, the input cam includes a first body portion defining a first aperture for receiving the spindle portion and a second body portion defining the compartment. The first body portion is cylindrical and the second body portion is semi-cylindrical and projects outwardly from the first body portion. The recessed surface is defined along the second body portion.

In yet another embodiment, the biasing member is a coil spring. In another embodiment, the first locking recess and the second locking recess are each offset from respective adjacent

Date Reçue/Date Received 2020-04-15

locations on the spindle portion that define perpendicular orientations of the handle portion with an adjacent edge of the door. In a refinement of this embodiment, the first and second locking recesses extend longitudinally along the spindle portion through an inner end of the spindle portion.

In another embodiment, the handle portion is non-perpendicular to an adjacent edge of the door when the handle portion is in either of the first orientation and the second hand orientation. In yet another embodiment, the biasing member is positioned around the spindle portion, and the biasing member includes a spring tab extending through the locking member and into the compartment of the input cam. In a refinement of this embodiment, the locking member includes a passage and the spring tab extends through the passage, and the locking member is mounted to the spindle portion between the biasing member and the input cam.

In another aspect, an exit trim assembly for a door includes an escutcheon housing defining an interior and at least one opening through the escutcheon housing, and a lever handle extends from the escutcheon housing. The lever handle includes a spindle portion and a handle portion extending from the spindle portion in a first orientation, the spindle portion extending through the at least one opening into the interior of the escutcheon housing. The spindle portion includes a receiving bore opening on opposite first and second sides of the spindle portion and an input cam positioned around the spindle portion in the interior of the escutcheon housing. The input cam defines an aperture for receiving the spindle portion and a bore extends through the input cam in intersecting relation with the aperture. The exit trim assembly further includes a locking member positioned in the bore of the input cam and into the receiving bore of the spindle portion to couple the spindle portion with the input cam in the first orientation. The locking member is movable relative to the input cam to withdraw the locking member from the receiving bore at a first side of the spindle portion to de-couple the spindle portion from the input cam and allow rotation of the lever handle relative to the input cam to reverse a handing of the handle portion from the first orientation to a second orientation that is opposite the first orientation. The locking member is re-positionable into the receiving bore from the second side of the spindle portion to couple the lever handle with the input cam with the handle portion in the second orientation.

In one embodiment, the locking member includes a head and a threaded shaft portion extending from the head that is positioned in the bore of the input cam. In a refinement of this

Date Reçue/Date Received 2020-04-15

embodiment, the threaded shaft portion is threadingly engaged to the spindle portion in the receiving bore. In a further refinement, the locking member includes a shear feature along the threaded shaft portion that defines a shear location between the spindle portion and the input cam where the threaded shaft portion severs in response to an over-turn force applied to the handle portion. In still a further refinement, the threaded shaft portion includes a tool engagement recess opposite the head. The tool engagement recess is accessible through the receiving bore to remove a severed part of the threaded shaft portion from the receiving bore of the spindle portion.

In another refinement of this embodiment of the locking member, the locking member includes a non-threaded shaft portion extending from the threaded shaft portion that is received within the receiving bore of the spindle portion. In a further refinement, the input cam includes a compartment between the aperture of the input cam and the bore of the input cam, and a lock nut is positioned in the compartment in threaded engagement with the threaded shaft portion of the locking member. In yet a further refinement, the lock nut is non-rotatably captured in the compartment. In another refinement, the input cam includes a slot between the aperture and the compartment.

In another embodiment, the handle portion is perpendicular to an adjacent edge of the door when the handle portion is in either of the first orientation and the second orientation.

It should be understood that the component and assembly configurations of the present disclosure can be varied according to specific design requirements and need not conform to the general shape, size, connecting means or general configuration shown in the illustrative drawings to fall within the scope and teachings of this patent application.

While the invention has been described in connection with what is presently considered to be the most practical and preferred embodiment, it is to be understood that the invention is not to be limited to the disclosed embodiment(s), but on the contrary, is intended to cover various modifications and equivalent arrangements included within the spirit and scope of the appended claims, which scope is to be accorded the broadest interpretation so as to encompass all such modifications and equivalent structures as permitted under the law.

Date Reçue/Date Received 2020-04-15

Furthermore it should be understood that while the use of the word preferable, preferably, or preferred in the description above indicates that feature so described may be more desirable, it nonetheless may not be necessary and any embodiment lacking the same may be contemplated as within the scope of the invention, that scope being defined by the claims that follow. In reading the claims it is intended that when words such as "a," "an," "at least one" and "at least a portion" are used, there is no intention to limit the claim to only one item unless specifically stated to the contrary in the claim. Further, when the language "at least a portion" and/or "a portion" is used the item may include a portion and/or the entire item unless specifically stated to the contrary.

Date Reçue/Date Received 2020-04-15

CLAIMS

1. A handle assembly, comprising:

an escutcheon;

an input cam rotatably mounted to the escutcheon, the input cam comprising an aperture and a bore extending from the aperture;

a lever handle extending into the aperture, the lever handle comprising a first opening and a second opening angularly spaced from the first opening, the lever handle having a first orientation relative to the input cam in which the first opening is an aligned opening that is aligned with the bore, the lever handle having a second orientation relative to the input cam in which the second opening is the aligned opening that is aligned with the bore; and

a coupler being movably mounted to the input cam, the coupler having a coupling position in which the coupler extends into the aligned opening and couples the lever handle to the input cam, the coupler having a decoupling position in which the coupler is removed from the aligned opening and the lever handle is rotatable relative to the input cam between the first orientation and the second orientation.

2. The handle assembly of claim 1, wherein the lever handle comprises a receiving bore defining the first opening and the second opening.

3. The handle assembly of claim 1 or 2, wherein the coupler is biased toward the coupling position.

4. The handle assembly of any one of claims 1 to 3, wherein the coupler comprises a threaded portion, wherein each of the first opening and the second opening comprises a corresponding threaded portion and wherein with the coupler in the coupling position, the threaded portion is threadedly engaged with the corresponding threaded portion of the aligned opening.

Date Reçue/Date Received 2021-11-12

5. The handle assembly of any one of claims 1 to 4, wherein the lever handle is rotatable about a rotational axis and wherein the coupling position and the decoupling position are offset from one another in directions transverse to the rotational axis.

6. The handle assembly of claim 1, wherein the escutcheon comprises an escutcheon housing defining an interior and an opening through the escutcheon housing, wherein the lever handle extends from the escutcheon housing and comprises a spindle portion and a handle portion extending from the spindle portion, the spindle portion extending through the opening and into the interior of the escutcheon housing, the spindle portion comprising a receiving bore opening on opposite first and second sides of the spindle portion, wherein the input cam is positioned around the spindle portion, the aperture of the input cam being sized for receiving the spindle portion, wherein the coupler comprises a locking member positioned in the bore of the input cam and into the receiving bore of the spindle portion to couple the spindle portion with the input cam, wherein the locking member is movable relative to the input cam to withdraw the locking member from the receiving bore at a first side of the spindle portion to de-couple the spindle portion from the input cam and allow rotation of the lever handle relative to the input cam to reverse a handing of the handle portion from the first orientation to the second orientation, and wherein the locking member is re-positionable into the receiving bore from the second side of the spindle portion to couple the lever handle with the input cam with the handle portion in the second orientation.

7. The handle assembly of claim 6, wherein the locking member comprises a head and a threaded shaft portion extending from the head that is positioned in the bore of the input cam.

8. The handle assembly of claim 7, wherein the threaded shaft portion is threadingly engaged to the spindle portion in the receiving bore.

9. The handle assembly of claim 8, wherein the locking member comprises a shear feature along the threaded shaft portion that defines a shear location between the spindle portion and the input cam where the threaded shaft portion severs in response to an over-turn force applied to the handle portion.

Date Reçue/Date Received 2021-11-12

10. The handle assembly of claim 9, wherein the threaded shaft portion comprises a tool engagement recess opposite the head, wherein the tool engagement recess is accessible through the receiving bore to remove a severed part of the threaded shaft portion from the receiving bore of the spindle portion.

11. The handle assembly of claim 7, wherein the locking member comprises a non-threaded shaft portion extending from the threaded shaft portion that is received within the receiving bore of the spindle portion.

12. The handle assembly of claim 11, wherein the input cam comprises a compartment between the aperture of the input cam and the bore of the input cam, and further comprising a lock nut in the compartment in threaded engagement with the threaded shaft portion of the locking member.

13. The handle assembly of claim 12, wherein the lock nut is non-rotatably captured in the compartment.

14. The handle assembly of claim 12, wherein the input cam comprises a slot between the aperture and the compartment.

15. The handle assembly of any one of claims 6 to 14, wherein the handle portion is perpendicular to an adjacent edge of the door when the handle portion is in either of the first orientation and the second orientation.

16. A handle assembly, comprising:

an escutcheon;

an input cam rotatably mounted to the escutcheon for rotation about a rotational axis;

a lever handle selectively coupled with the input cam; and

a coupler selectively coupling the lever handle with the input cam, the coupler having a coupling position in which the coupler couples the lever handle with the input cam, the coupler

Date Reçue/Date Received 2021-11-12

having a decoupling position in which the lever handle is rotatable relative to the input cam between a first orientation and a second orientation, wherein the coupler is mounted for movement transverse to the rotational axis between the coupling position and the decoupling position.

17. The handle assembly of claim 16, wherein the lever handle comprises a receiving bore having a first side and a second side opposite the first side, wherein the coupler projects into the first side of the bore when the lever handle is in the first orientation and the coupling member is in the coupling position and wherein the coupler projects into the second side of the bore when the lever handle is in the second orientation and the coupling member is in the coupling position.

18. The handle assembly of claim 16 or 17, wherein the coupler comprises a frangible section and is configured to shear at the frangible section in response to an over-torque applied to the lever handle when the coupler is in the coupling position.

19. The handle assembly of claim 16 or 17, wherein the coupler is threaded, wherein the coupler is configured to move from the coupling position toward the decoupling position when rotated in a first rotational direction and wherein the coupler is configured to move from the decoupling position toward the coupling position when rotated in a second rotational direction opposite the first rotational direction.

20. The handle assembly of any one of claims 16 to 19, wherein the coupler is biased toward the coupling position.

Date Reçue/Date Received 2021-11-12

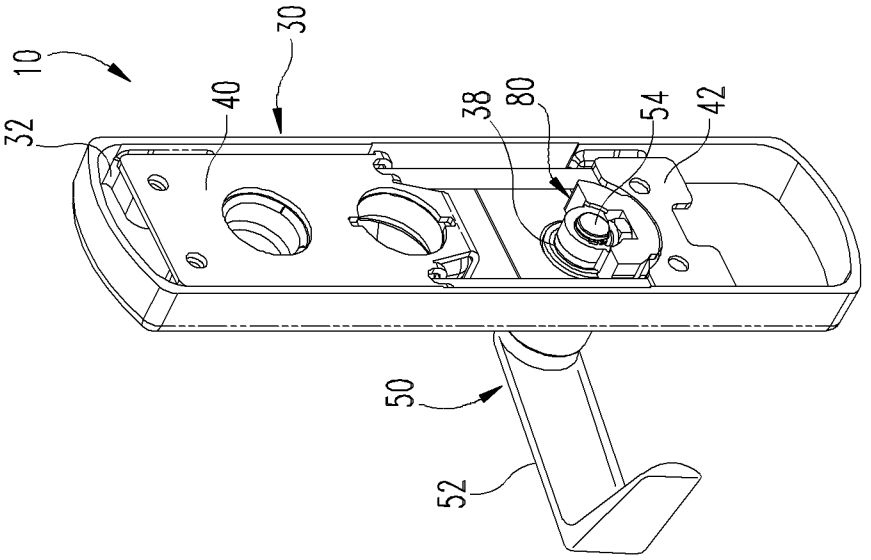

Fig. 1B

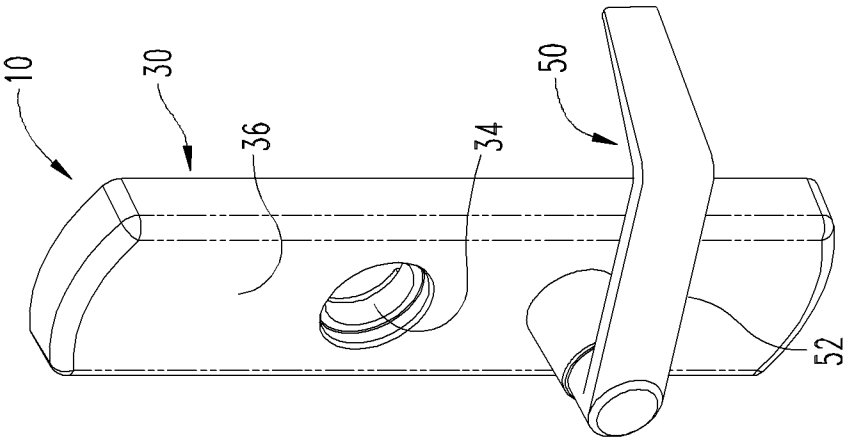

Fig. 1A

Date Reçue/Date Received 2020-04-15

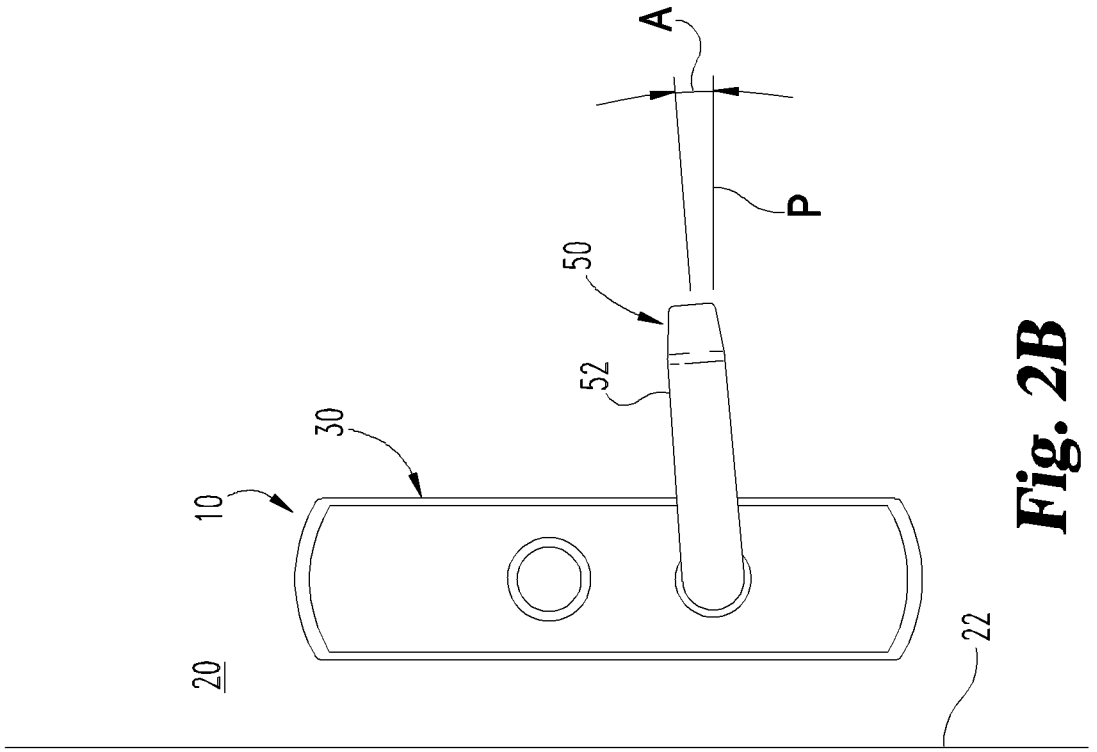

Fig. 2B

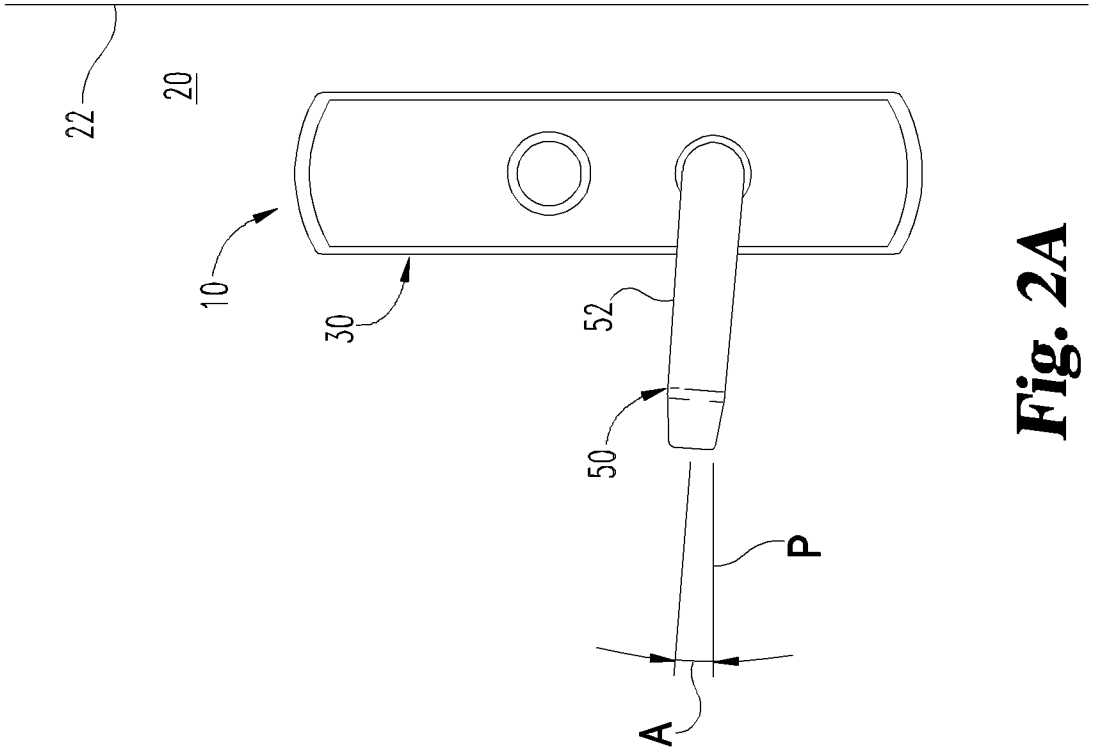

Fig. 2A

Date Reçue/Date Received 2020-04-15

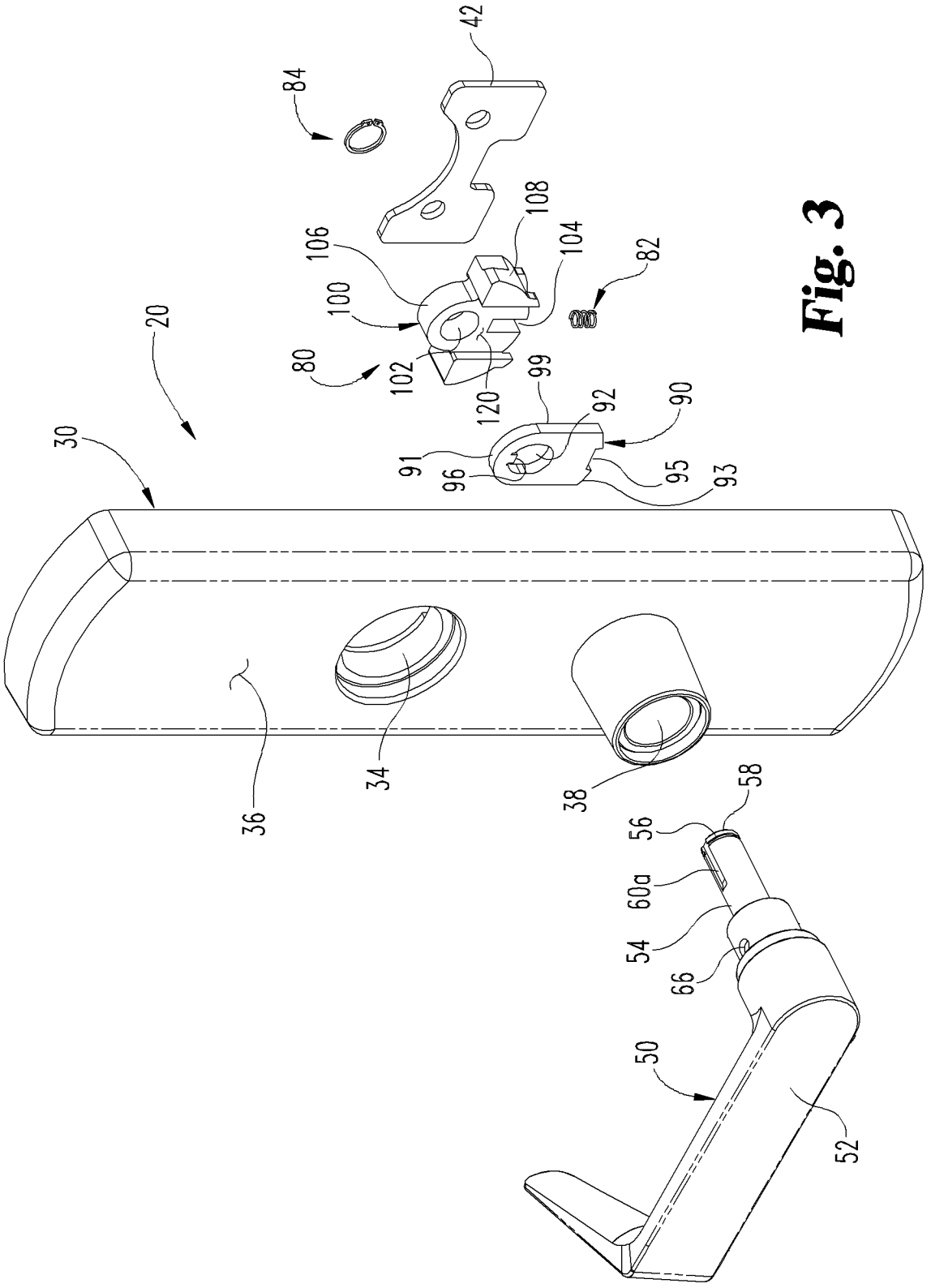

Fig. 3

Date Reçue/Date Received 2020-04-15

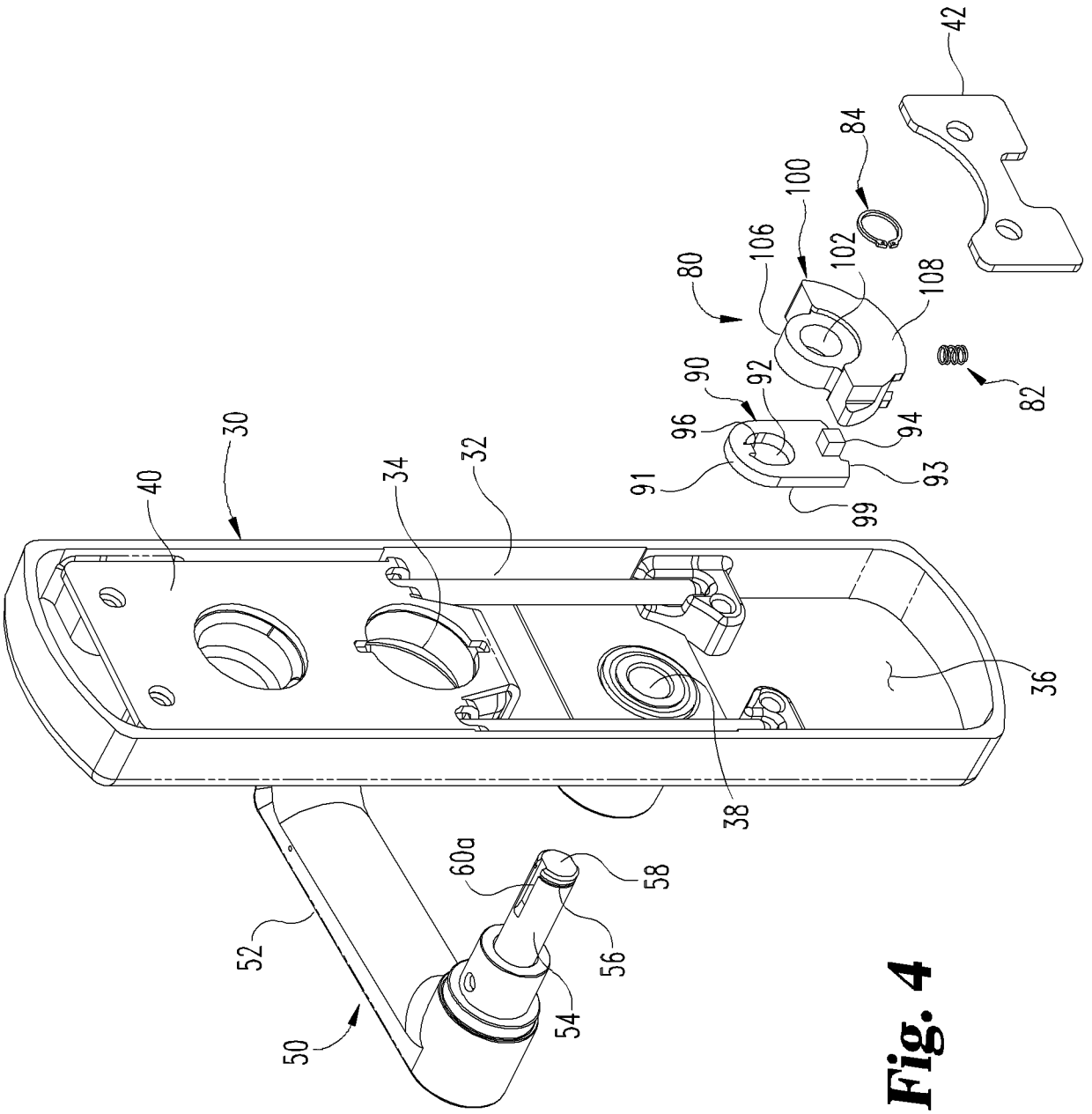

Fig. 4

Date Reçue/Date Received 2020-04-15

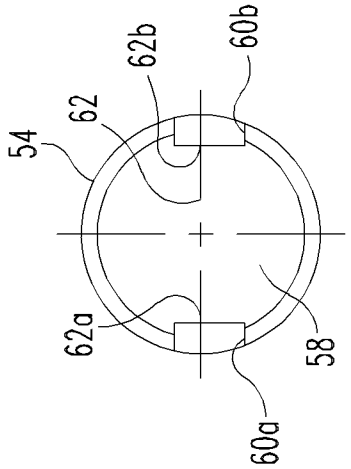

Fig. 5B

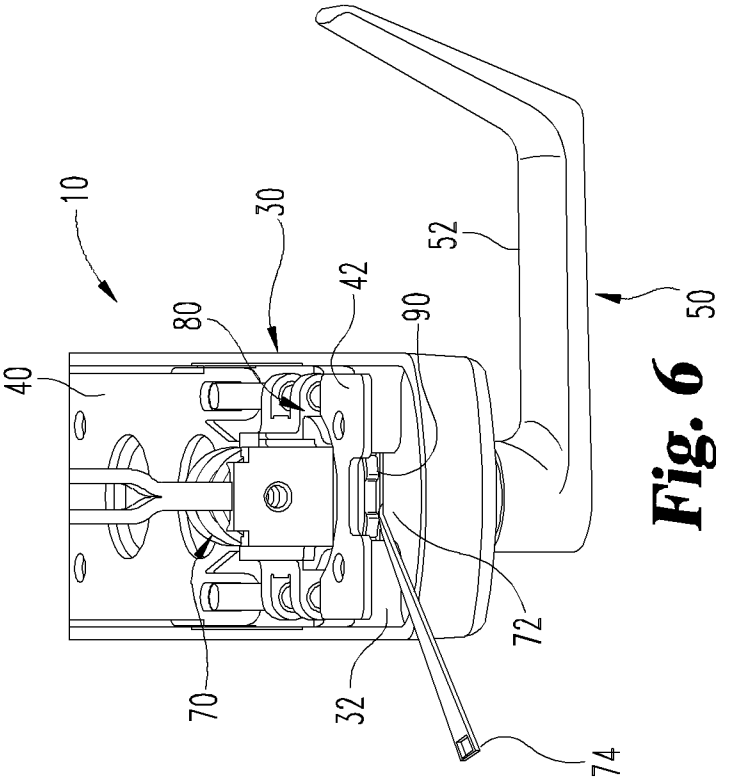

Fig. 6

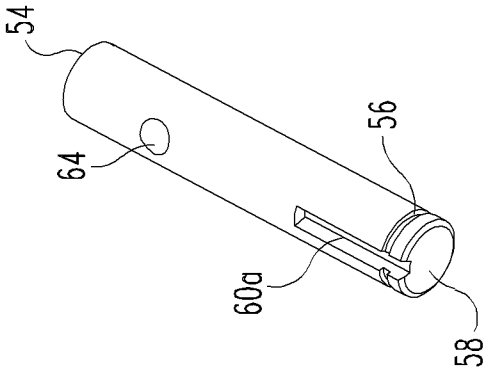

Fig. 5A

Date Reçue/Date Received 2020-04-15

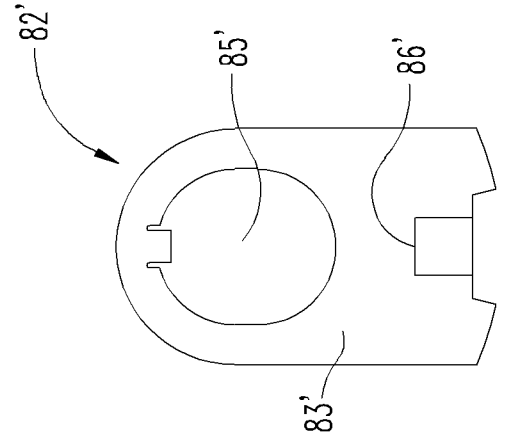

Fig. 9A

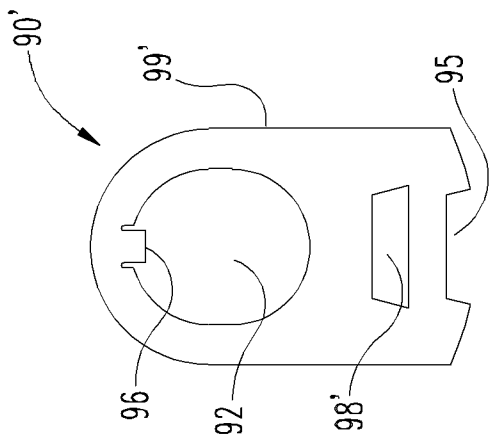

Fig. 10

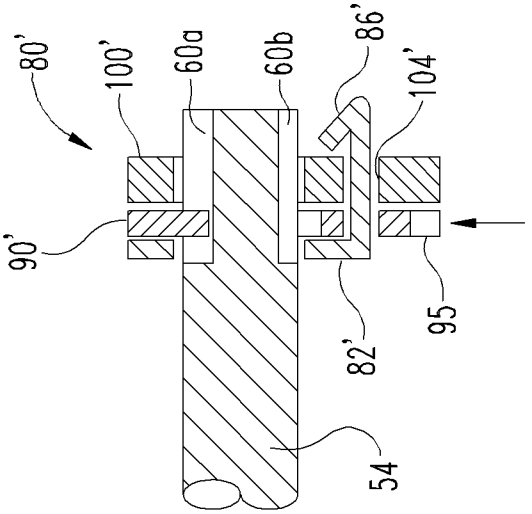

Fig. 8

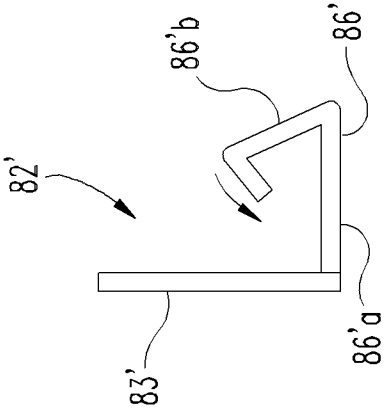

Fig. 9B

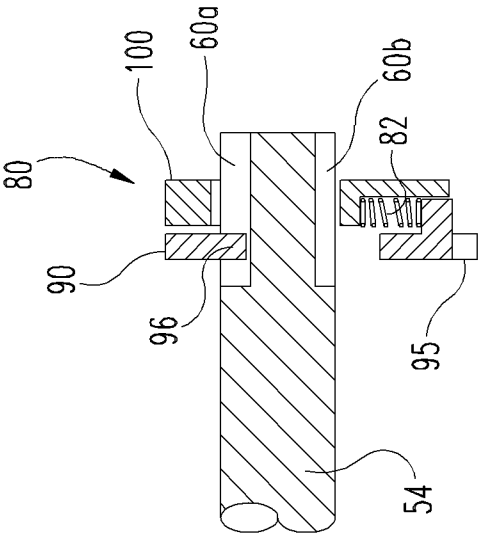

Fig. 7A

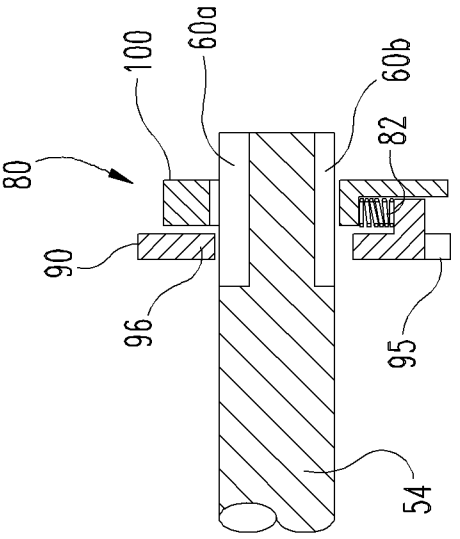

Fig. 7B

Date Reçue/Date Received 2020-04-15

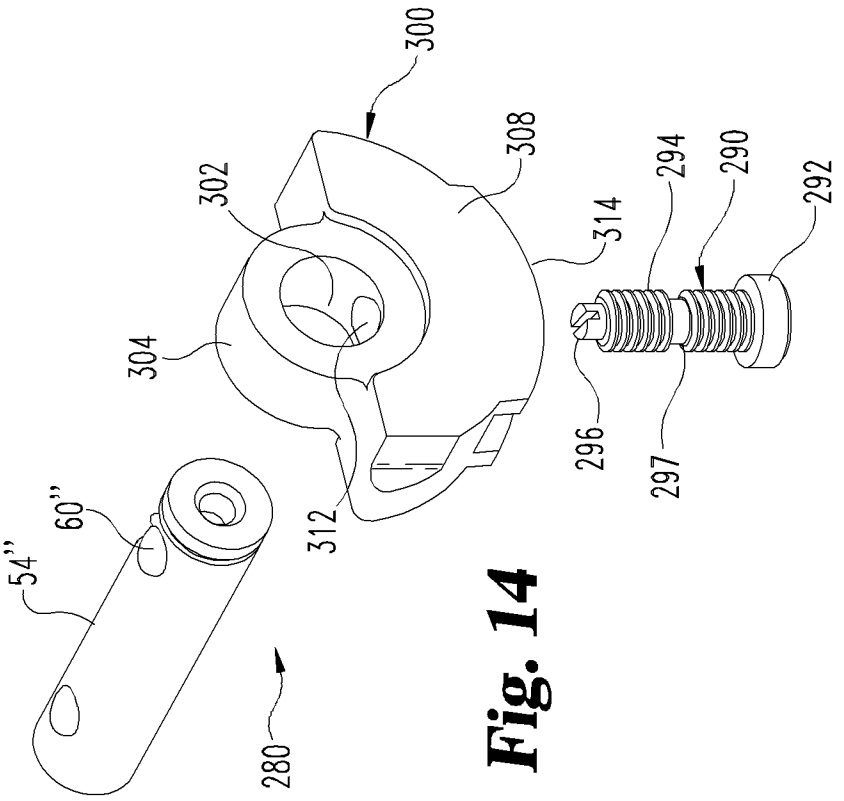

Fig. 14

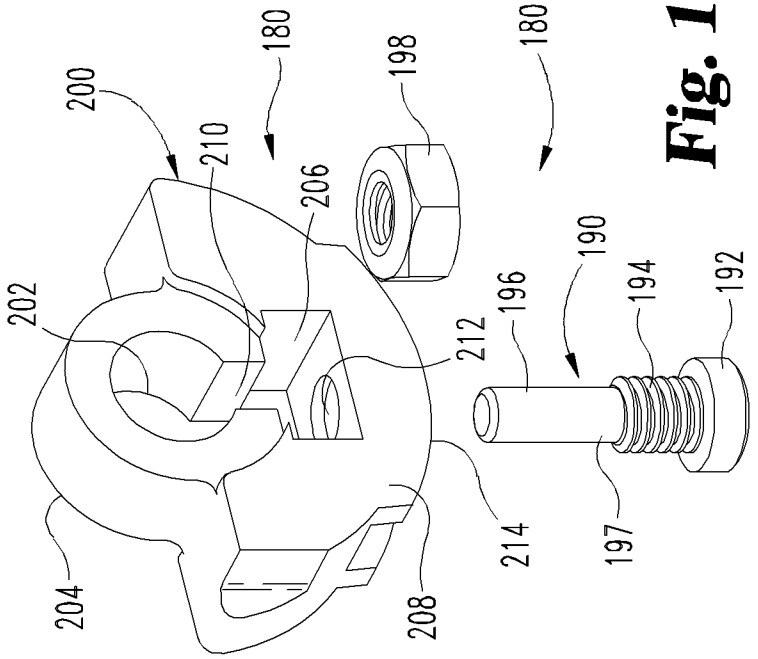

Fig. 11

Date Reçue/Date Received 2020-04-15

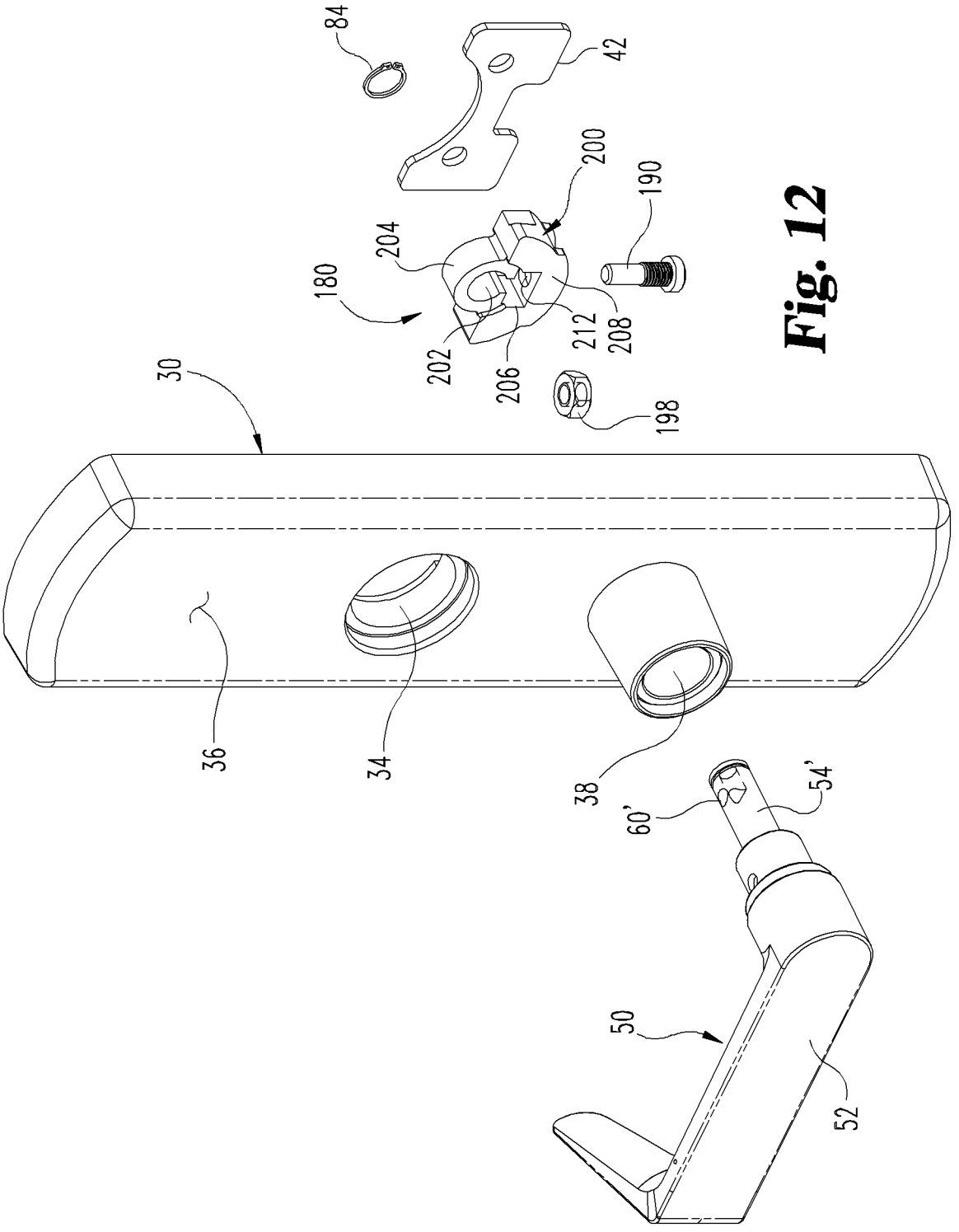

Fig. 12

Date Reçue/Date Received 2020-04-15

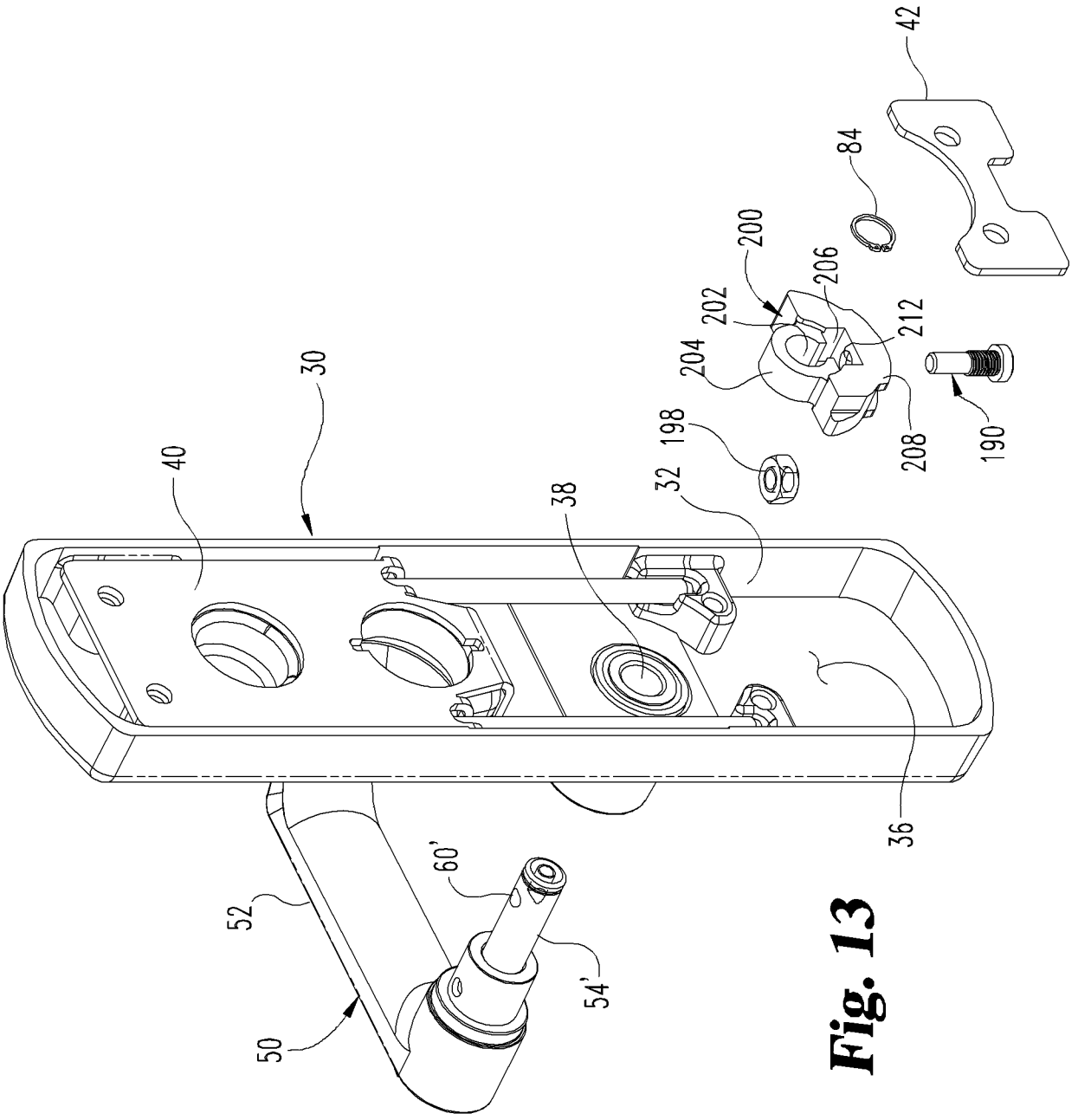

Fig. 13

Date Reçue/Date Received 2020-04-15

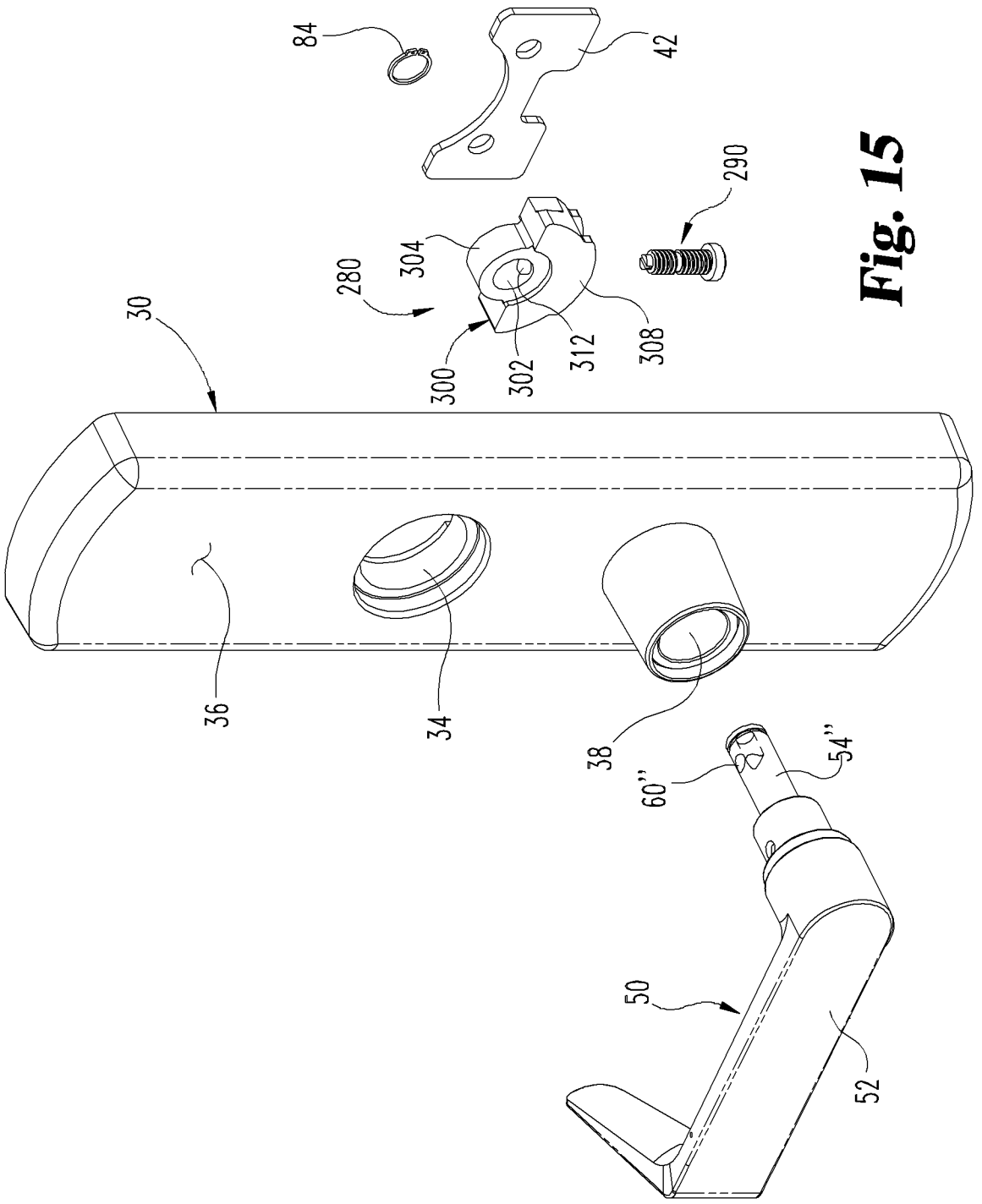

Fig. 15

Date Reçue/Date Received 2020-04-15

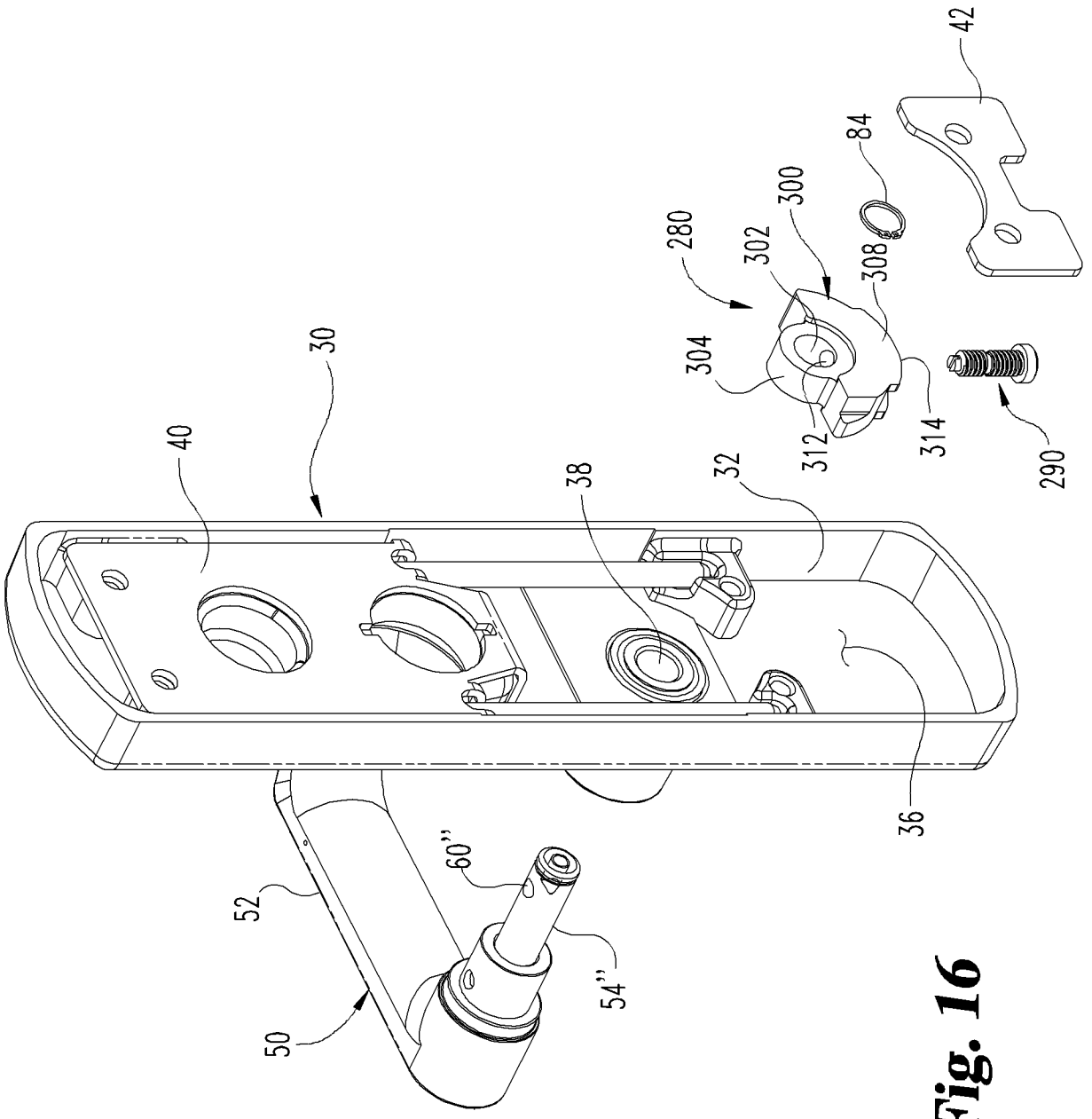

Fig. 16

Date Reçue/Date Received 2020-04-15

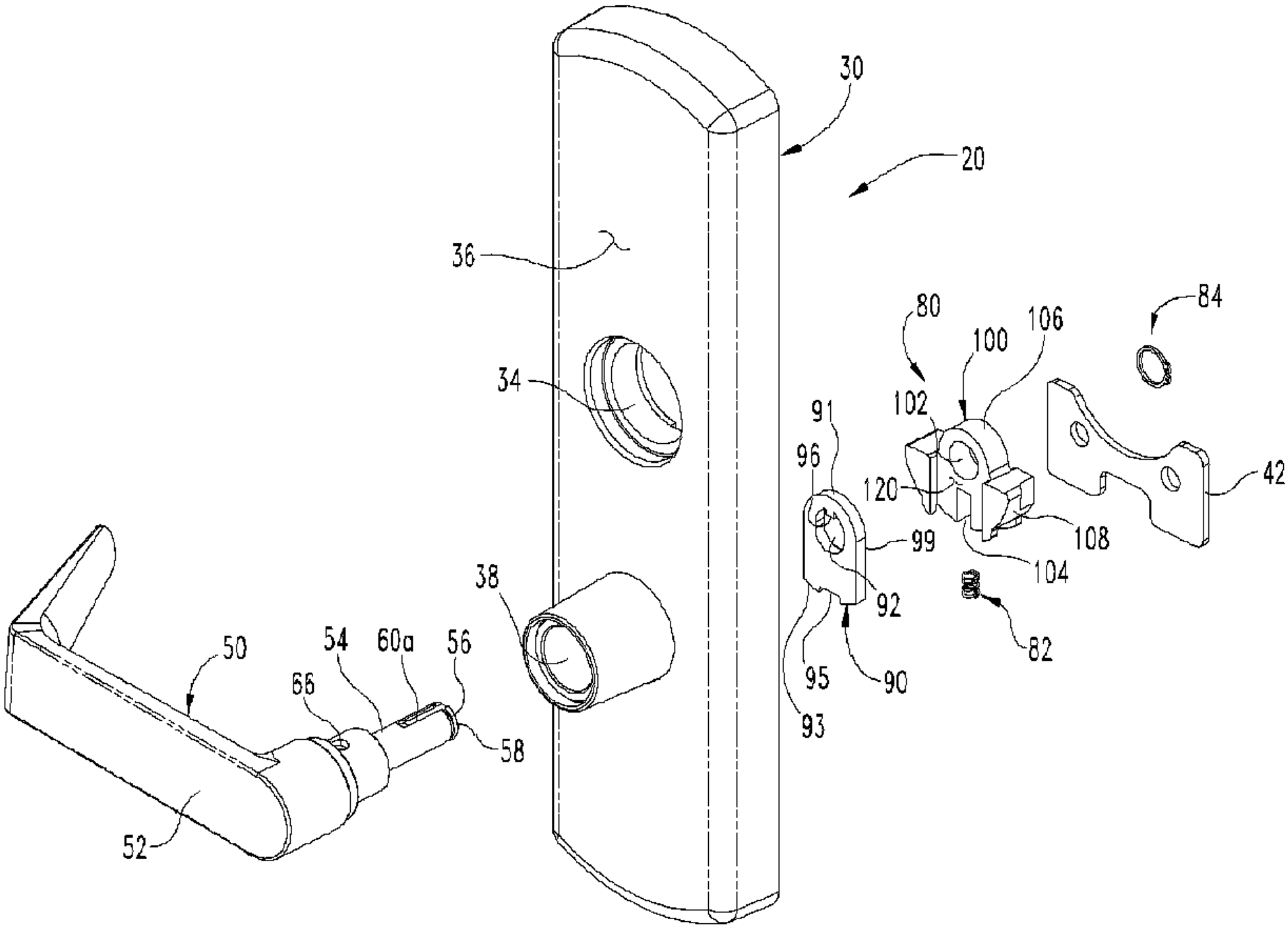
30
20
36
34
38
50
52
54
60a
56
58
66
80
84
100
106
102
91
96
120
99
108
104
92
82
95
90
93
42