July 4, 1939. G. E. NIGHTHART 2,164,343

STRAIGHTENING MECHANISM

Filed Jan. 21, 1937 8 Sheets-Sheet 1

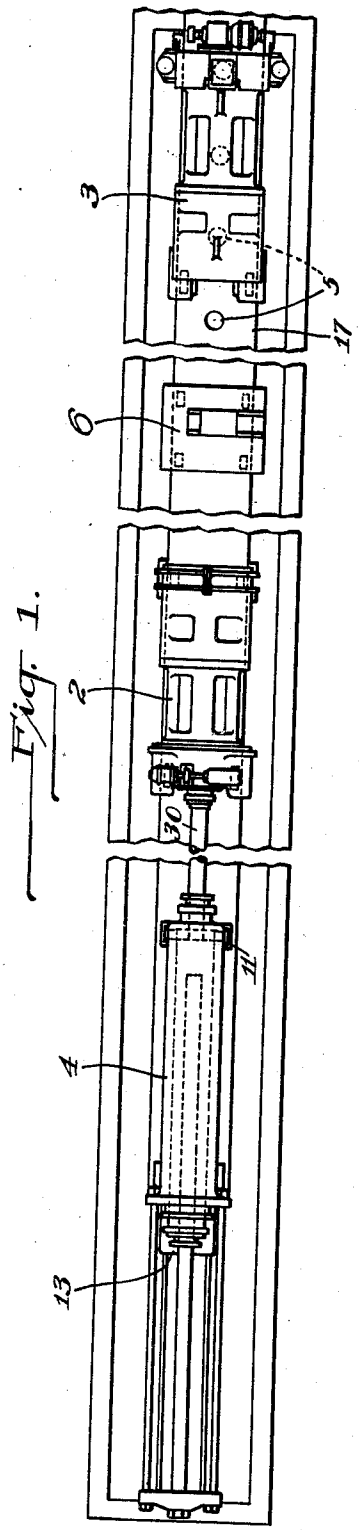

Fig. 1.

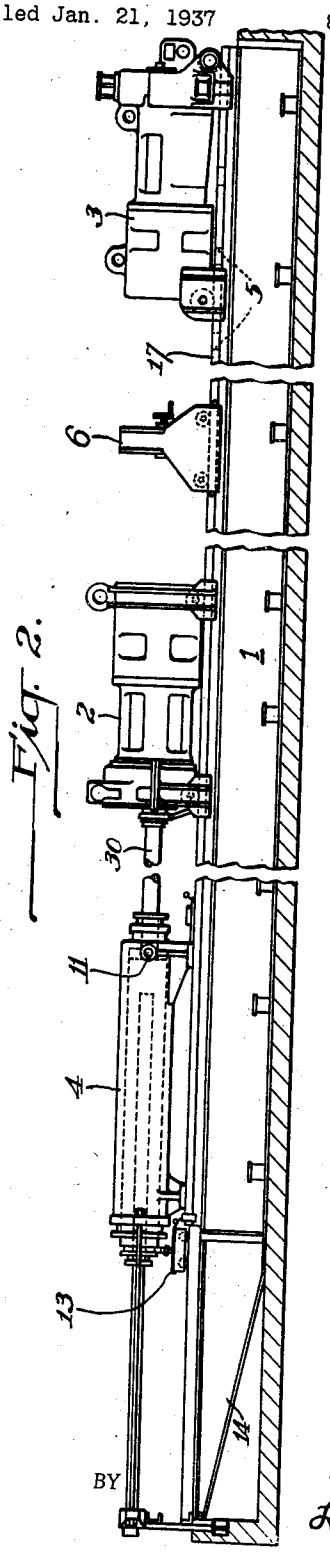

Fig. 2.

INVENTOR.
G. E. NIGHTHART
BY L. E. Webster
ATTORNEY.

July 4, 1939. G. E. NIGHTHART 2,164,343

STRAIGHTENING MECHANISM

Filed Jan. 21, 1937 8 Sheets-Sheet 2

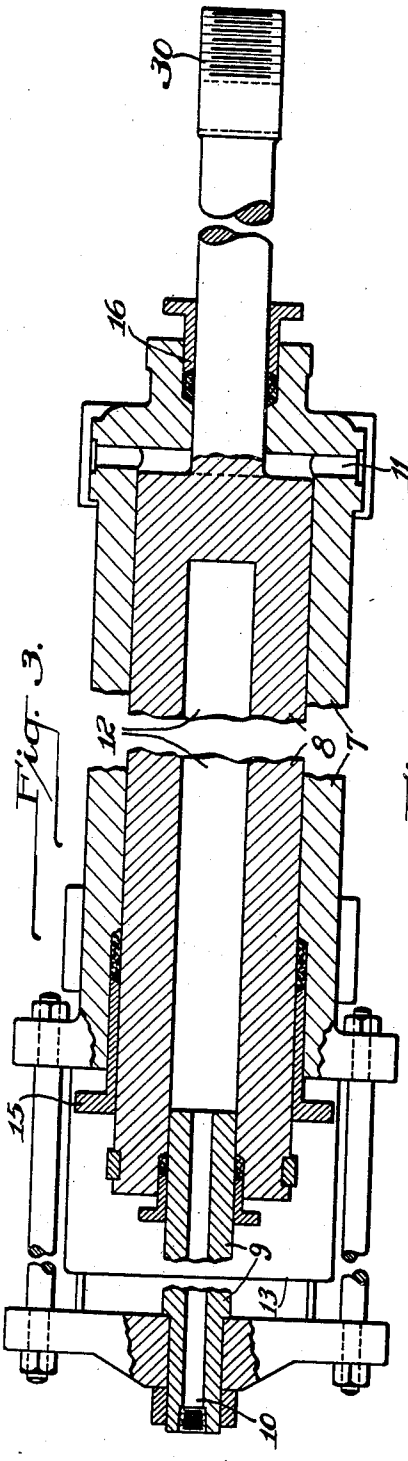

Fig. 3.

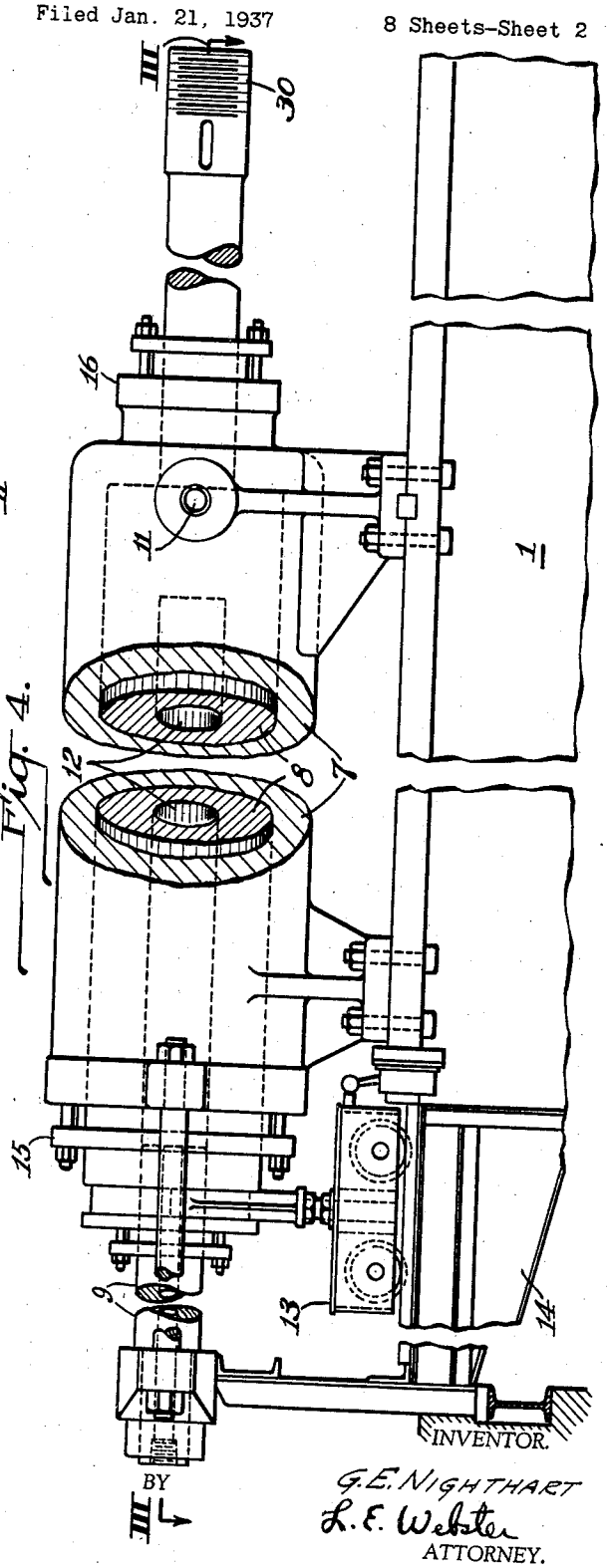

Fig. 4.

INVENTOR.
G. E. NIGHTHART

BY
L. E. Webster
ATTORNEY.

July 4, 1939. G. E. NIGHTHART 2,164,343

STRAIGHTENING MECHANISM

Filed Jan. 21, 1937 8 Sheets-Sheet 3

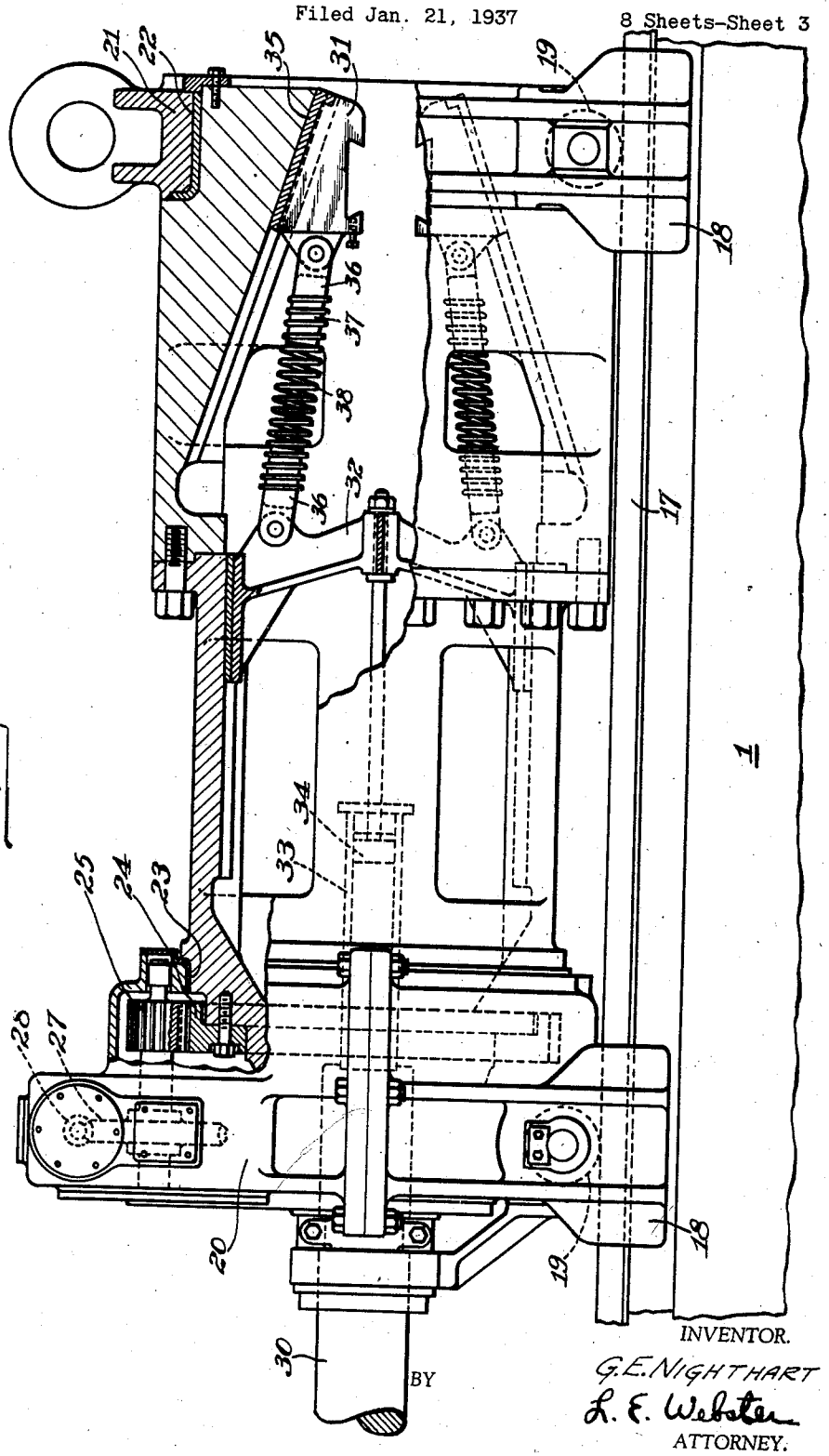

Fig. 5.

BY

INVENTOR.
G. E. NIGHTHART
L. E. Webster
ATTORNEY.

July 4, 1939. G. E. NIGHTHART 2,164,343

STRAIGHTENING MECHANISM

Filed Jan. 21, 1937 8 Sheets-Sheet 4

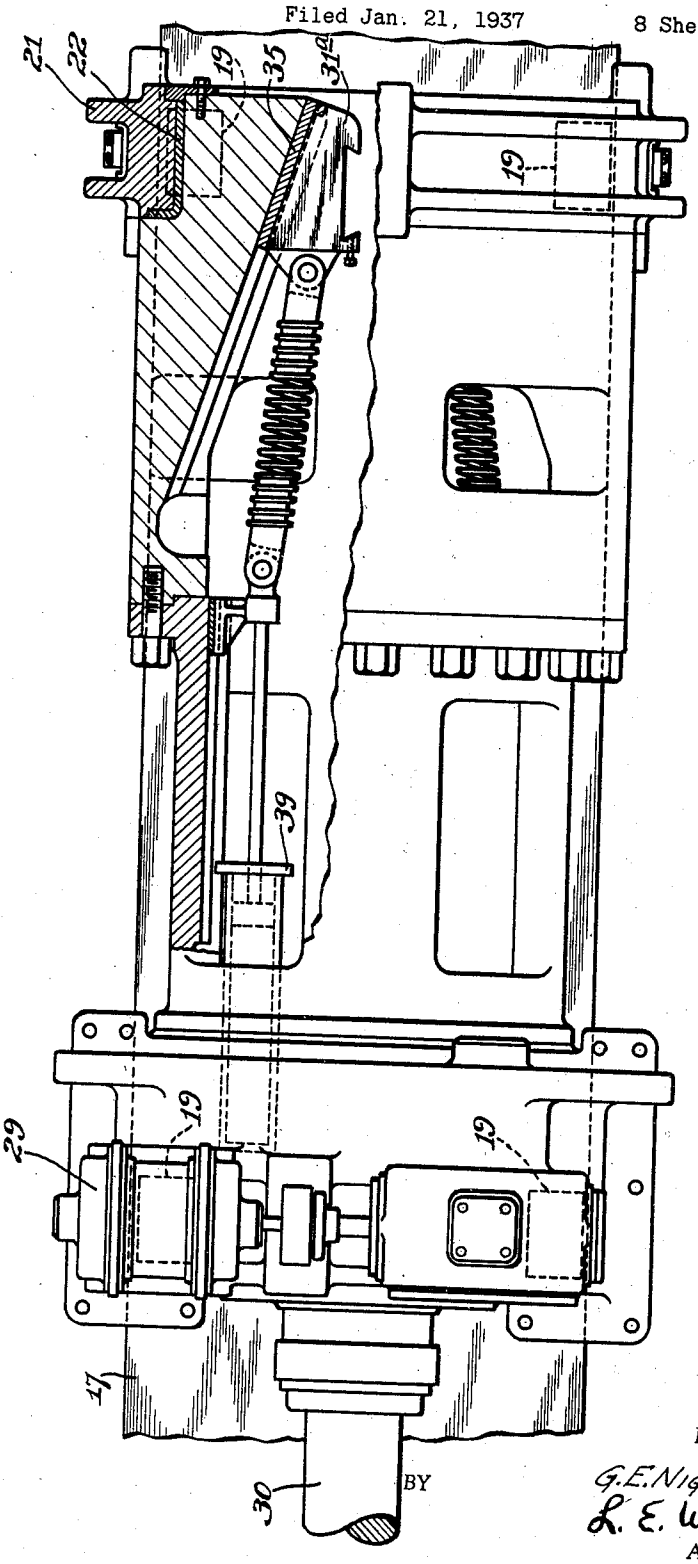

Fig. 6.

INVENTOR.
G. E. NIGHTHART

BY
L. E. Webster
ATTORNEY.

July 4, 1939. G. E. NIGHTHART 2,164,343

STRAIGHTENING MECHANISM

Filed Jan. 21, 1937 8 Sheets-Sheet 5

Fig. 7.

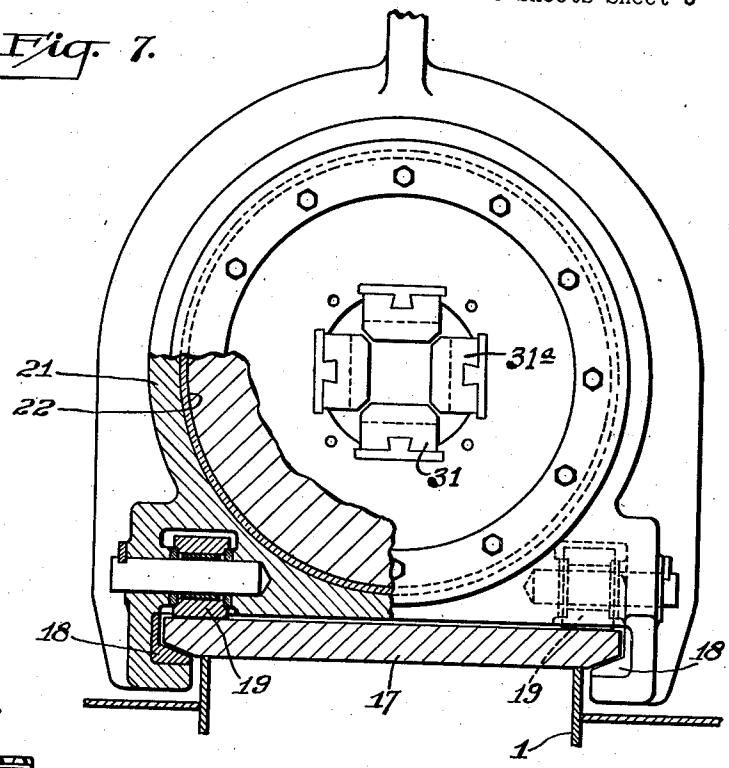

Fig. 8.

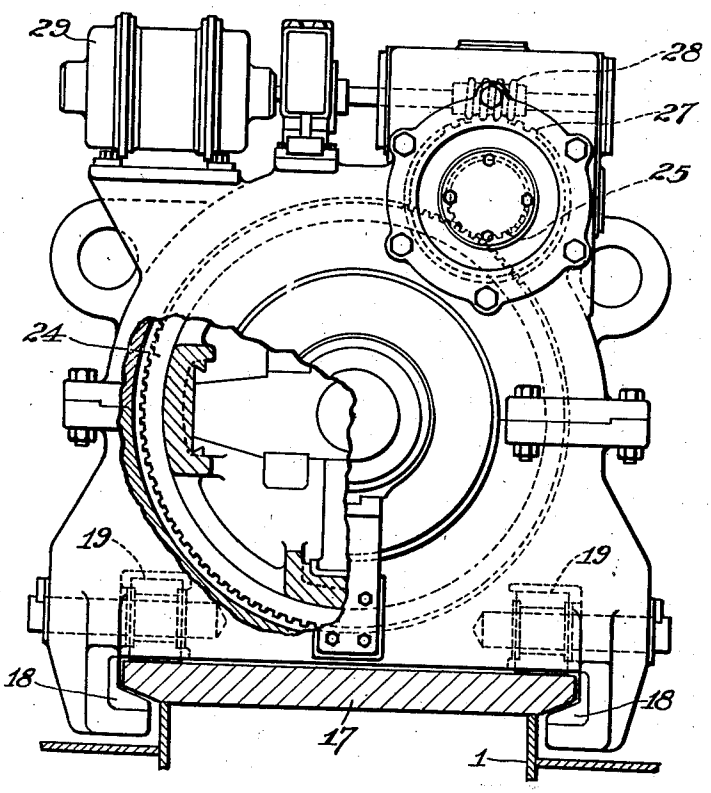

INVENTOR.
G. E. NIGHTHART
L. E. Webster
ATTORNEY.

July 4, 1939. G. E. NIGHTHART 2,164,343

STRAIGHTENING MECHANISM

Filed Jan. 21, 1937 8 Sheets-Sheet 6

Fig. 11.

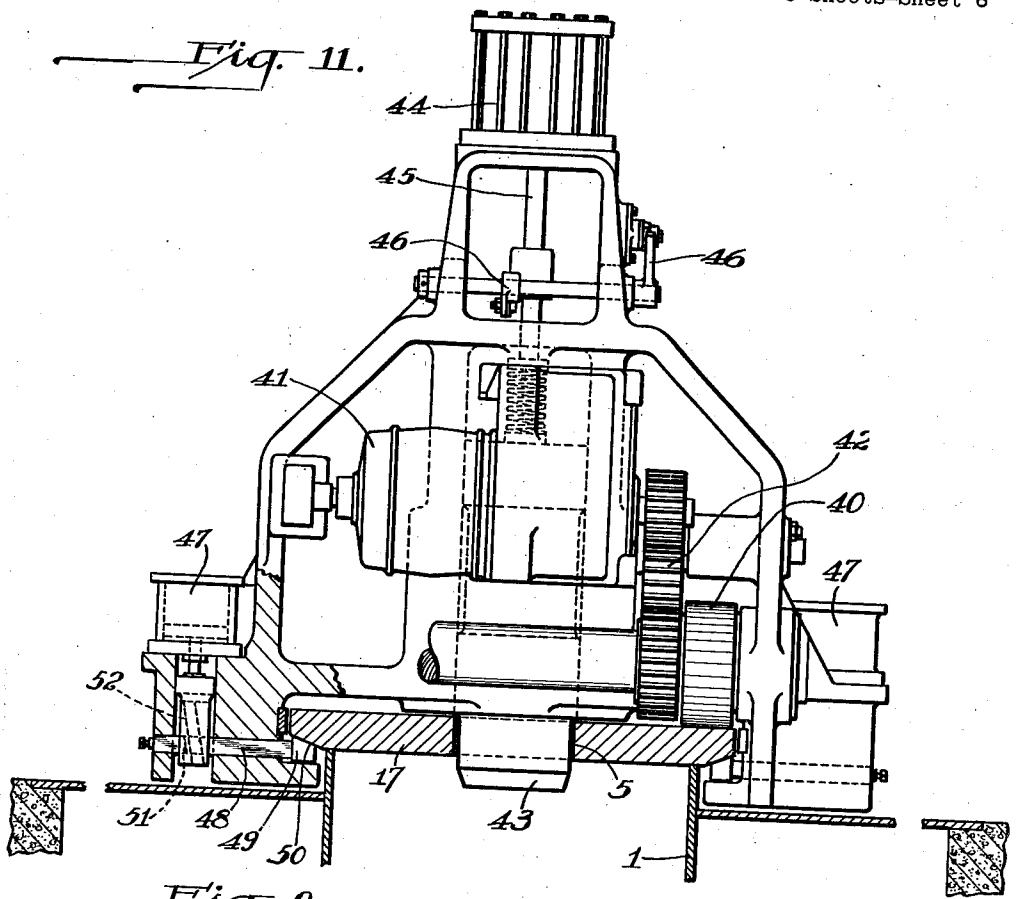

Fig. 9.

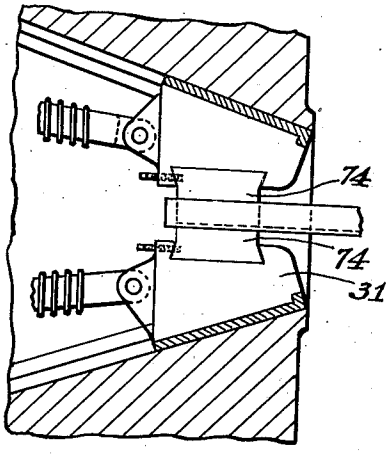

Fig. 10.

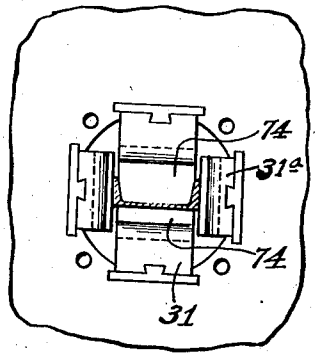

INVENTOR.
G. E. NIGHTHART

BY L. E. Webster

ATTORNEY.

July 4, 1939. G. E. NIGHTHART 2,164,343

STRAIGHTENING MECHANISM

Filed Jan. 21, 1937 8 Sheets-Sheet 7

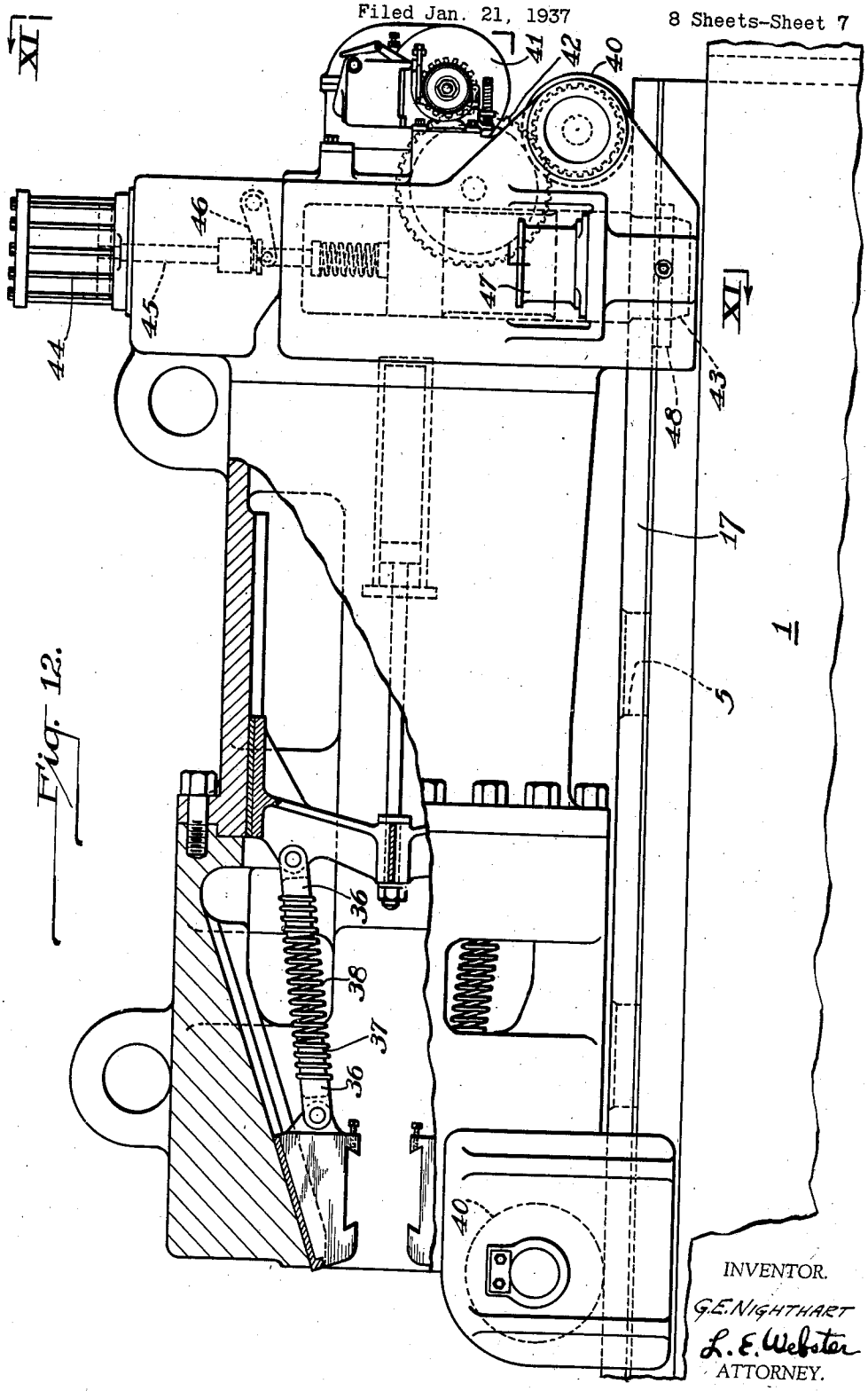

Fig. 12.

INVENTOR.
G.E. NIGHTHART
L. E. Webster
ATTORNEY.

July 4, 1939. G. E. NIGHTHART 2,164,343

STRAIGHTENING MECHANISM

Filed Jan. 21, 1937 8 Sheets-Sheet 8

Fig. 14.

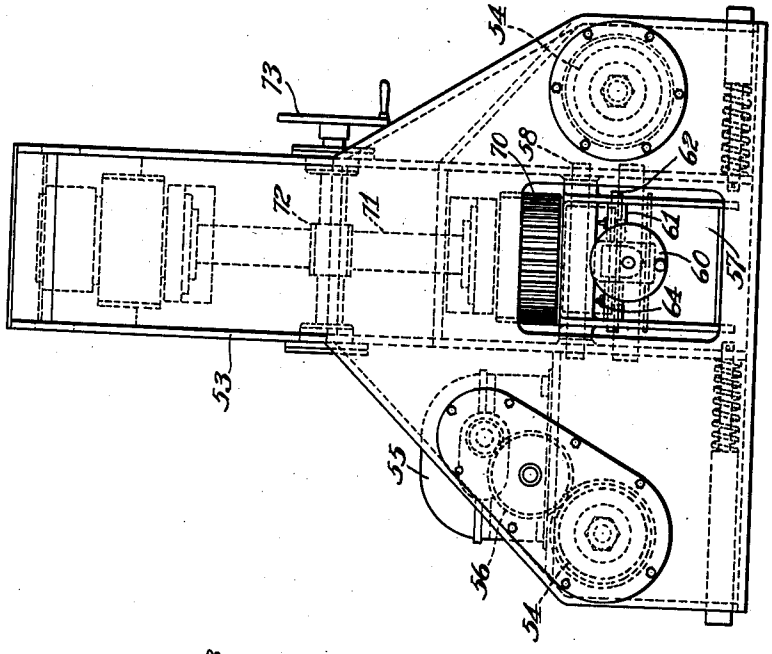

Fig. 13.

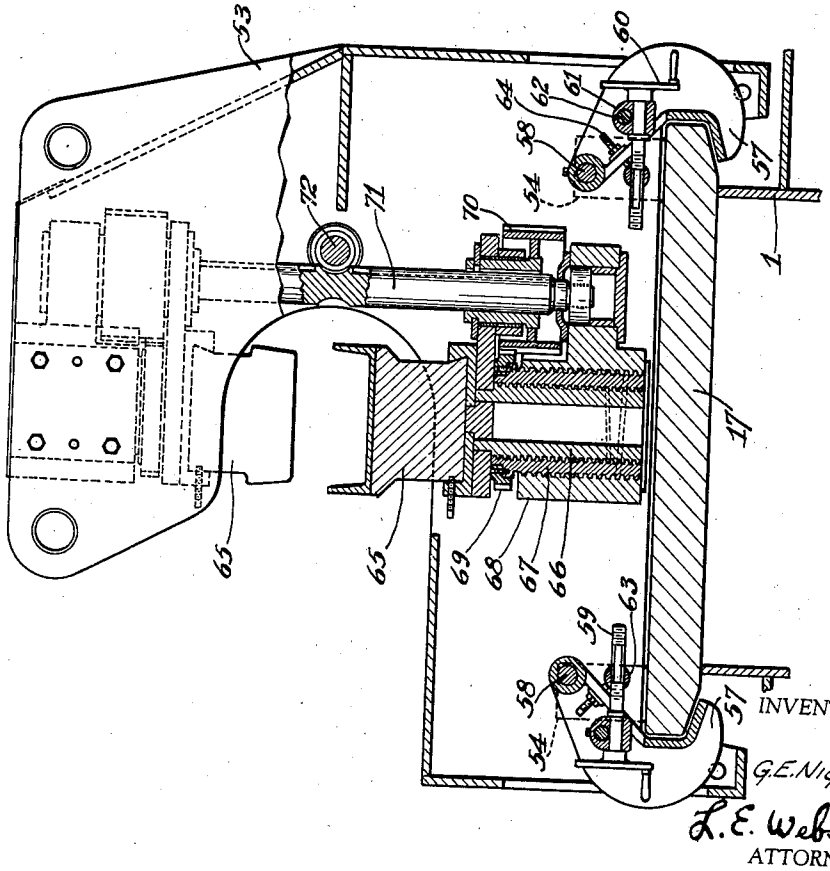

INVENTOR.
G.E. NIGHTHART
L.E. Webster
ATTORNEY.

Patented July 4, 1939

2,164,343

UNITED STATES PATENT OFFICE

2,164,343

STRAIGHTENING MECHANISM

George E. Nighthart, New Kensington, Pa., assignor to Aluminum Company of America, Pittsburgh, Pa., a corporation of Pennsylvania

Application January 21, 1937, Serial No. 121,483

13 Claims. (Cl. 153—35)

This invention relates to the straightening of bars, shapes, and the like, which, after being given their cross-sectional configuration by rolling, extrusion, and like processes, are found to be bent, twisted, or warped along their longitudinal axes. More particularly, the invention relates to straightening such products by stretching the material beyond its elastic limit and simultaneously removing any tendency to skew.

It is an object of the invention to provide an improved method and apparatus for straightening bars, shapes, and the like. Generally stated, the primary object is to provide improvements in a stretching machine in which all types of irregularities may be removed, and requiring only one handling operation of the material. Another object is the provision of apparatus which is adapted to grip the material to be straightened, irrespective of the type of irregularity, without resorting to preliminary straightening operations.

Fig. 1 shows a plan view of a straightening machine constructed according to the invention, with portions of the main frame broken away;

Fig. 2 shows a side elevation of the machine shown in plan in Fig. 1;

Fig. 3 shows a sectional plan view of the hydraulic actuating mechanism of the straightening machine, with portions broken away;

Fig. 4 shows a side elevation of the mechanism shown in plan in Fig. 3;

Fig. 5 shows a side elevation, partly in section, of the headstock mechanism;

Fig. 6 shows a plan view, partly in section, of the headstock mechanism shown in elevation in Fig. 5;

Fig. 7 shows an end elevation, partly in section, of the headstock, looking at the gripping end;

Fig. 8 shows an end elevation, partly in section, of the headstock, looking at the drive end;

Fig. 9 shows a typical section through the gripping heads of both the tailstock and headstock;

Fig. 10 shows an end view of the gripping mechanisms of the head and tailstock, with a workpiece in gripping position;

Fig. 11 shows an end elevation, partly in section, of the tailstock mechanism viewed from the drive end. The break line is taken along XI—XI of Fig. 12;

Fig. 12 shows a side elevation, partly in section, of the tailstock mechanism;

Fig. 13 shows an end elevation, partly in section, of the intermediate clamping mechanism;

Fig. 14 shows a side elevation of the intermediate clamping mechanism.

Referring to Figs. 1 and 2, the machine consists essentially of a heavy base frame 1 upon which are mounted for movement a headstock, generally indicated as 2, and a tailstock 3. The headstock is adapted for movement to effect the stretching operation by means of a hydraulic mechanism 4. The tailstock is adapted for movement along the base frame to accommodate different lengths of material. The base frame is provided with a plurality of holes 5, preferably equally spaced along its length, with which a plunger mounted in the tailstock is adapted to cooperate to fix the position of the tailstock with respect to the frame during the stretching operation. The spacing of the holes 5 is such that the distance between any two holes is less than the total movement of the headstock when actuated by the hydraulic mechanism.

For the elimination of certain types of eccentricities occurring in material to be straightened, it is sometimes desirable to provide clamping mechanism positioned intermediate the tail and head stocks. The reference numeral 6 indicates one form of such mechanism.

Hydraulic actuating mechanism

Figs. 3 and 4 illustrate the hydraulic actuating mechanism. The cylinder 7 cooperates with the slidably mounted main plunger 8, which also cooperates with the stationary smaller diameter plunger 9. For travel in the direction opposite to that required for stretching, fluid is pumped through the opening 10 in the plunger 9, pushing the plunger 8 in a forward direction. For the stretching operation, the fluid is let into the cylinder 7 through the openings 11, moving the main plunger 8 back over the plunger 9, the opening 10 in the plunger 9 during this operation serving as an outlet for the fluid contained in the chamber 12 in the plunger 8. This construction permits the use of a single fluid pressure source for effecting the stretching operation and the return operation. Due to the difference in volumes required to move the plunger in the stretching direction as compared with that in the return direction, a rapid return travel is effected.

To support the plunger 8 in its run-out position, a carriage 13 is provided, running on tracks mounted on the top of the cantilevered portion 14 of the main frame 1. It is apparent that when a stretching operation is being performed there is a tendency to deflect the main frame, as it is acting as a column with an eccentric load applied substantially on the center line of the cylinder. Alignment of the plunger 8 is maintained by cantilevering the portion 14 of the frame and

thus permitting this portion to assume the slope imparted to the cylinder 7 by the deflection of the frame when under load.

Suitable packing for the plunger 8 is provided at 15 and 16. This packing should be of such nature that it will permit rotation of the plunger within the cylinder for purposes to be described later.

Headstock

Figs. 5, 6, 7, 8, 9, and 10 illustrate in more detail the construction of the headstock 2. The headstock is adapted for movement along the base 1, and is kept in alignment with the top flange or plate 17 of the base by suitable guides 18. To facilitate movement along the base, rollers 19 are provided. The frame members 20 and 21 in which the rollers 19 are mounted are adapted to permit rotation of the chucking structure of the headstock. The rotation of this portion is within the bushings 22 and 23.

The rotatable portion of the headstock has mounted thereon a ring-gear 24 which is in engagement with a pinion 25 mounted in member 20. The pinion is driven by a worm gear 27 cooperating through a worm 28, with a suitable power source such as a motor 29. The rotatable portion of the headstock is in threaded engagement with and is keyed to the portion 30 of the main plunger of the hydraulic mechanism. Thus, the rotation of the headstock effected through the pinion 25 and the ring gear 24 is transmitted to the main plunger 8 within the hydraulic cylinder.

Mounted within the rotatable portion of the headstock are a plurality of gripping jaws 31 and 31*a*. The jaws 31 have a linkage with a common yoke member 32. This member is adapted for movement by an air cylinder 33 in which is mounted a plunger 34. The jaws 31 are adapted for sliding cooperation with the inclined surfaces 35 provided in the rotatable portion of the head, and are connected to the yoke 32 through links 36 which are provided with spiral grooves 37 adapted to cooperate with springs 38. In the forward movement of the jaw members 31 to effect a gripping action on a bar or shape to be stretched, the springs 38 act in compression by pressure transmitted from the air cylinder 33. The gripping action is augmented during the stretching operation by the tendency of this operation to pull the jaws further down on the inclined surfaces 35. When the jaws are to be returned to their open position, the air cylinder pulls back the yoke 32, and a pull is exerted on the jaws by the springs. In their normal position, the coils of the springs 38 are spaced apart, as shown. Thus, when movement into gripping position is imparted by the air cylinder 33, the resilience of the springs will permit a degree of movement to accommodate small irregularities and insure a tight engagement of both jaws before the stretching operation is begun.

The jaws 31*a* in the gripping mechanism are each provided with separately controlled air cylinders 39, and may be independently brought into gripping coaction with the shape to be stretched after the two jaws connected with the yoke member 32 are brought into engagement. As these jaws are independently operable, it is unnecessary that the springs acting in the linkage between the jaws and the air cylinder have their coils spaced apart.

Figs. 9 and 10 show the method of gripping a shape in the gripping jaws. For convenience of illustration, the jaws are shown in cooperative relationship with a standard structural channel section which, in the present illustration, is the shape to be straightened. Gripping blocks 74 are mounted in grooves provided in the gripping jaws 31 and 31*a*, and held in position by set screws or some other suitable means. The gripping blocks are so formed as to conform closely with the particular shape to be straightened and to prevent any distortion of the shape by the gripping action of the jaws, the block shown being particularly adapted in shape for the channel work-piece. Blocks suitably shaped for gripping any shape of work piece may be readily designed within the scope of the ordinary mechanic's skill. It is essential, however, to obtain a satisfactory straightening of the material, that the gripping action in no way tends to deform the cross-sectional configuration of the material.

Tailstock

Figs. 11 and 12 illustrate in detail the tailstock mechanism 3, which is adapted for movement along the base 1 on rollers 40. Two of these rollers are adapted to be driven by a motor 41 through a train of gears 42, one of which is mounted on the common shaft of the rollers. When the tailstock has been located in the desired position along the frame 1, it is locked in position by dropping the anchor pin 43 into one of the holes 5 in the frame. The anchor pin is actuated by the double-acting air cylinder 44 through the bar 45. The downward movement of the bar 45 is adapted to actuate a valve mechanism 46 which energizes air cylinders 47 mounted one on each side of the frame.

Mounted one on each side of the tailstock frame are two pins 48, each having an inner end 49 which is provided with an inclined surface 50 complementary with the under-side of the top flange 17 of the base 1. A rectangular hole 51 is provided in the bar 48 disposed at an angle of less than 90° with the axis of the bar. A plunger connected to the air cylinder 47 is provided with complementary angular surfaces 52 which cooperate with the surfaces of the hole 51 to wedge the bar 48 into or out of engagement with the surfaces of the frame member 17. The upward movement of the pistons in the air cylinders 47 serves to clamp the tailstock tightly to the machine frame. This clamping action serves to prevent any tilting movement of the tailstock during the stretching operation.

The tailstock is provided with gripping means identical with and numbered similarly to those provided in the headstock. However, the clamping means in the tailstock are not mounted for rotation.

Intermediate clamp

The intermediate clamping mechanism is shown in Figs. 13 and 14. The reference numeral 53 indicates the clamping mechanism frame adapted for movement along the stretcher base frame 1 on the rollers 54 driven by a suitable motor 55 through the gear train 56. When properly positioned longitudinally of the bar or shape to be straightened, the clamping mechanism is fixed relative to the base frame by the grips 57 pivoted in the frame 53 by pins 58. A shouldered screw 59 is mounted for rotation, which may be imparted by the handwheel 60, in a suitable journal 61 which is pivoted in the grip 57 by a pin 62. The threads of the screw 59

cooperate with the threads in the bar 63 oscillatably mounted in the frame 53 to clamp the base 1 upon rotation of the screw. A set screw 64 is provided to fix the clearance between the base 1 and the clamping mechanism, for longitudinal travel.

The bar or shape to be straightened is gripped by suitably shaped jaws 65 mounted on screw 66, the threads of which cooperate with the internal threads in the sleeve 67. The external threads on the sleeve 67 cooperate with the threads in the fixed nut 68. The sleeve 67 is rotated by the gear 69 mounted thereon and cooperating with the gear 70 mounted on the keyed shaft 71. The shaft 71 is driven by suitable worm and gear mechanism 72 driven by the handwheel 73. The upper and lower jaws are actuated in identical fashion by the common shaft 71. Thus, upon rotation of the handwheel 73, the gripping jaws are brought into clamping engagement with the shape.

Operation

The mode of operation is dependent entirely upon the character and degree of irregularity that is to be removed from the bar or shape. If the shape is merely bent along its longitudinal axis, the straightening operation is effected by placing the ends of the shape in the head and tail stock gripping means and the hydraulic mechanism is actuated to subject the shape to tension in excess of the elastic limit of the material.

When, however, the shape is twisted or skewed, the one end is placed in the tailstock gripping means and the headstock is rotated until the gripping means therein are properly positioned for gripping engagement with the opposite end of the shape. Sufficient tension is then applied by actuation of the hydraulic stretching mechanism to virtually eliminate any axial bow, and the headstock gripping means are rotated in a direction opposite to the twist existing in the shape until the elastic limit of the material in torsional shear is exceeded to an extent sufficient to remove the twist permanently. The shape is then stretched beyond the tensile elastic limit to remove any axial bow. In some cases, it may be preferable to keep increasing the tension on the material at the same time that the headstock is being rotated to induce the shearing stress necessary to remove the tendency of the shape to skew.

When shapes are produced by some methods, and particularly the extrusion process, they will be virtually free from twist over a major portion of their length and still be badly twisted over the remaining portion. If an attempt is made to straighten a shape having this type of irregularity by gripping the ends in the head and tailstock and rotating the headstock sufficiently to remove the original twist, the previously straight portion may have a twist set up in the direction of rotation. To prevent setting up a twist in the straight portion, the intermediate clamp is positioned along the axis of the shape at the point where the initial twist begins, so that the rotation of the headstock is only imparted to that portion of the shape between the headstock and the intermediate clamp.

I claim:

1. In a machine for straightening bars and shapes, means for gripping the ends of material to be straightened comprising a pair of oppositely disposed jaws having common actuating means and a second pair of jaws actuated independently of said first pair of jaws and of each other, and means adapted to actuate said gripping means to subject said material to tensile stress and torsional shearing stress.

2. In a machine for straightening bars and shapes, means for gripping the ends of material to be straightened comprising a pair of oppositely disposed jaws having common actuating means and yieldable means between said common actuating means and each jaw of said pair, and a second pair of jaws actuated independently of said first pair of jaws and of each other, and means adapted to actuate said gripping means to subject said material to tensile stress and torsional shearing stress.

3. In a machine for straightening bars and shapes, a main frame, means for gripping the ends of the material to be straightened adapted for movement relative to each other along said frame, means to anchor one of said first mentioned means selectively at different spaced-apart points along the frame to accommodate varying lengths of material, and means actuated by said anchoring means adapted for cooperation with said frame to prevent tilting of said anchored gripping means during the straightening operation.

4. In a machine for straightening bars and shapes, means for gripping the ends of material to be straightened, said means comprising a pair of oppositely disposed jaws having common actuating means, yieldable means between said common actuating means and each jaw of said pair, and a second pair of jaws adapted to be actuated independently of said first pair of jaws and of each other, and means adapted to actuate said gripping means to subject said material to tensile stress.

5. In a machine for straightening bars and shapes, a main frame, means for gripping the ends of material to be straightened adapted for movement relative to each other along said frame to stretch said material, means for effecting relative rotation of said gripping means to subject said material to torsional shearing stresses, and gripping means mounted on said frame intermediate said end gripping means and adapted to be fixed at a pre-selected position along said frame to limit said torsional shearing stresses to a portion of the length of said material.

6. In a machine for straightening bars and shapes, a main frame, means adapted for gripping the ends of the material to be straightened and adapted for movement relative to each other along said frame, hydraulic means comprising a plunger and cylinder for actuating the gripping means at one end of said material to subject said material to tensile stress, and means adapted to rotate said gripping means and said plunger to subject said material to torsional shearing stress.

7. In a machine for straightening bars and shapes, means for gripping the material to be straightened, means for rotating said gripping means to twist the material about its longitudinal axis, and means adapted to actuate said gripping means to stretch the material comprising a hydraulic cylinder and plunger, said plunger being so connected with said gripping means as to be rotated therewith.

8. In a machine for stretching bars and shapes, a main frame, means mounted on said frame adapted for gripping the ends of the material to be straightened comprising sets of jaws, each set consisting of a pair of oppositely disposed jaws having common actuating means, yieldable

means between said common actuating means and each jaw of said pair, and a second pair of jaws adapted to be actuated independently of said first pair of jaws and of each other, one of said gripping means being adapted for rotation and longitudinal movement relative to the other set of jaws to subject the material to torsional shearing and tensile stresses.

9. In a machine for stretching bars and shapes, a main frame, means mounted on said frame adapted for gripping the ends of the material to be straightened comprising sets of jaws, each set consisting of a pair of oppositely disposed jaws having common actuating means, yieldable means between said common actuating means and each jaw of said pair, and a second pair of jaws adapted to be actuated independently of said first pair of jaws and of each other, one of said gripping means being adapted for rotation and longitudinal movement relative to the other set of jaws to subject the material to torsional shearing and tensile stresses, and the other of said gripping means being adapted to be anchored selectively at different spaced apart points along the frame to accommodate varying lengths of material, and means adapted for cooperation with said frame to prevent tilting of said anchored gripping means during the straightening operation.

10. In a machine for stretching bars and shapes, a main frame, a headstock and tailstock mounted on said frame, means in both said headstock and tailstock for gripping one end of material to be straightened comprising a pair of oppositely disposed jaws having common actuating means, yieldable means between said common actuating means and each jaw of said pair, and a second pair of jaws adapted to be actuated independently of said first pair of jaws and of each other, means adapted for moving said tailstock along said frame, and means to anchor said tailstock selectively at different spaced apart points along the frame to accommodate varying lengths of material, and means adapted for cooperation with said frame to prevent tilting of said tailstock when anchored, means adapted to move said headstock relative to said tailstock to stretch the material, and means for rotating the gripping means in said headstock to subject the material to torsional shearing stresses.

11. In a machine for straightening bars and shapes, means for gripping the ends of the material to be straightened, said means comprising a pair of oppositely disposed jaws having common actuating means, yieldable means between said common actuating means and each jaw of said pair, and a second pair of jaws adapted to be actuated independently of said first pair of jaws and of each other, and means adapted to effect relative rotation of said gripping means to subject said material to torsional shearing stress.

12. In a machine for straightening bars and shapes, a main frame, means for gripping the ends of the material to be straightened adapted for rotation relative to each other to subject said material to torsional shearing stress, means to anchor one of said first-mentioned means selectively at different spaced apart points along the frame to accommodate varying lengths of material, and means actuated by said anchoring means adapted for cooperation with said frame to prevent tilting of said anchored gripping means during the straightening operation.

13. In a machine for straightening bars and shapes, a main frame, means for gripping the ends of the material to be straightened adapted for movement relative to each other along said frame and adapted for rotation relative to each other, means to anchor one of said first-mentioned means selectively at different spaced apart points along the frame to accommodate varying lengths of materal, and means actuated by said anchoring means adapted for cooperation with said frame to prevent tilting of said anchored gripping means during the straightening operation.

GEORGE E. NIGHTHART.