US 20180023169A1

(19) **United States**

(12) **Patent Application Publication**

(10) **Pub. No.: US 2018/0023169 A1**

(43) **Pub. Date: Jan. 25, 2018**

TAN et al.

(54) **PRODUCTION LINE FOR PRODUCING NATIONAL-STANDARD MAGNESIUM ALLOY INGOTS ON THE BASIS OF MAGNESIUM ALLOY WASTE MATERIAL**

(71) Applicant: **Heyi TAN**, Xiangtan (CN)

(72) Inventors: **Heyi TAN**, Xiangtan (CN); **Lunyuan TANG**, Xiangtan (CN)

(73) Assignee: **HUNAN S.R.M SCIENCE AND TECHNOLOGY CO., LTD**, Xiangtan (CN)

(21) Appl. No.: **15/677,020**

(22) Filed: **Aug. 15, 2017**

Related U.S. Application Data

(63) Continuation of application No. PCT/CN2015/073191, filed on Feb. 16, 2015.

Publication Classification

(51) **Int. Cl.**

C22B 26/22	(2006.01)
C22B 7/04	(2006.01)
B22D 9/00	(2006.01)
B22D 7/00	(2006.01)

(52) **U.S. Cl.**

CPC ***C22B 26/22*** (2013.01); ***B22D 7/005*** (2013.01); ***C22B 7/04*** (2013.01); ***B22D 9/00*** (2013.01)

(57) **ABSTRACT**

A production line comprises: a pretreatment system, a melting and refining system, and a casting system; magnesium alloy waste material passes in sequence through the pretreatment system, the melting and refining system, and the casting system, resulting in magnesium alloy ingots that conform to national standards. The production line for producing national-standard magnesium alloy ingots on the basis of magnesium alloy waste material processes magnesium alloy waste material, passing same through a pretreatment system, a preheating system a melting and refining system, a thermal insulation system, a casting system, and a post-treatment system; coatings and impurities on the surface of the magnesium alloy waste material are removed, and the material is processed into magnesium alloy ingots conforming to national standards; the pieces of equipment of each system are well-connected, the degree of automation is high, operation is simple, and production is highly efficient.

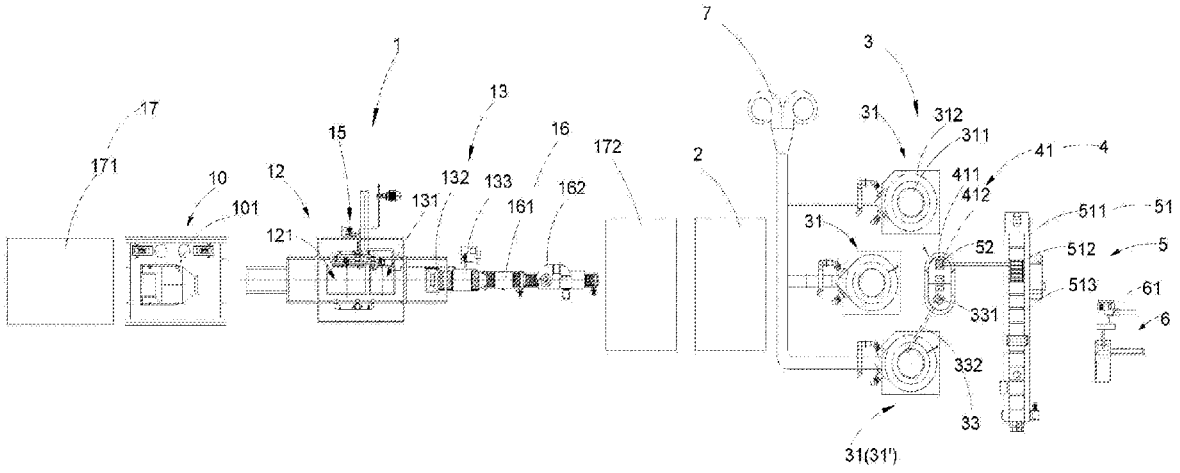

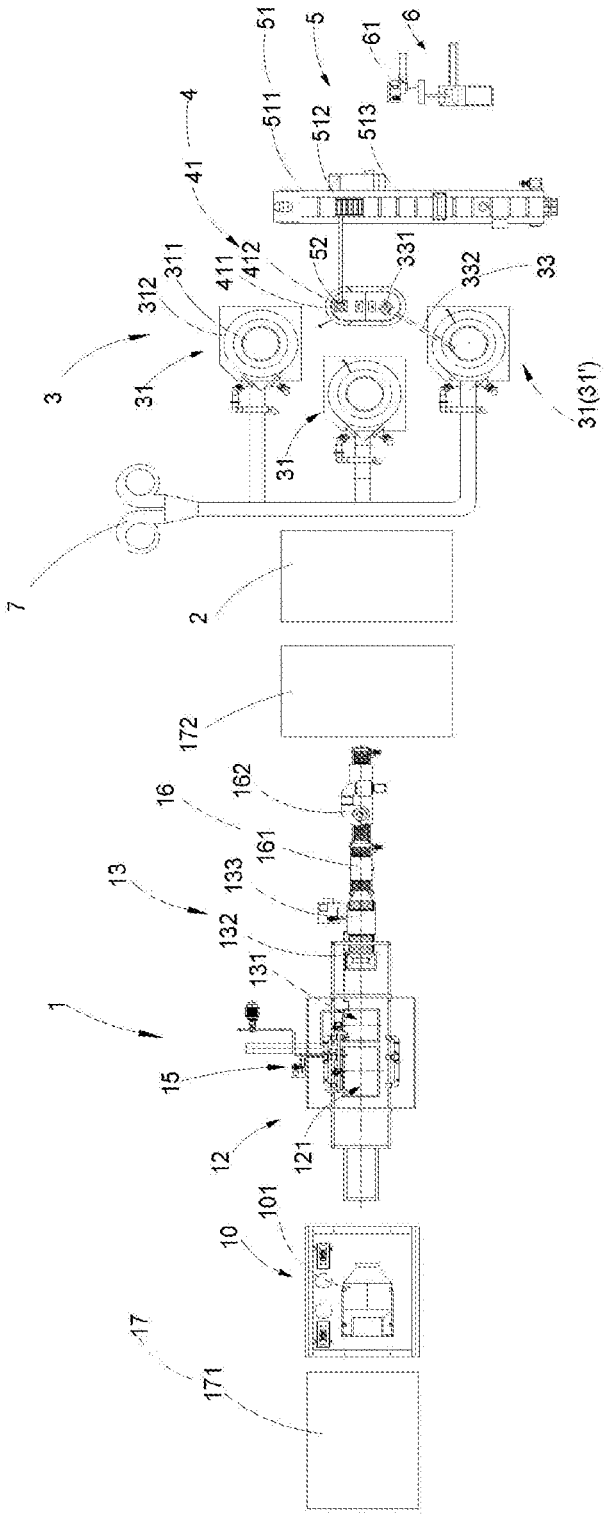
51
5
61
6
4
511
512
513
41
52
331
332
33
411
412
311
312
3
31
31(31')
7
2
172
16
162
161
13
133
132
131
1
15
12
121
101
10
17
171

Fig. 1

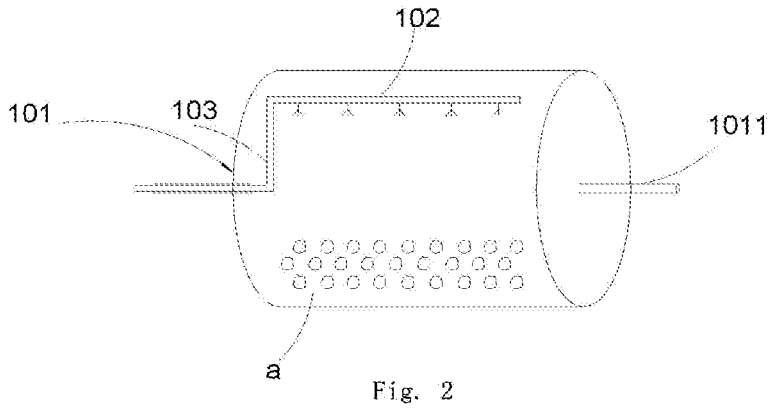
102
101
103
1011
a

Fig. 2

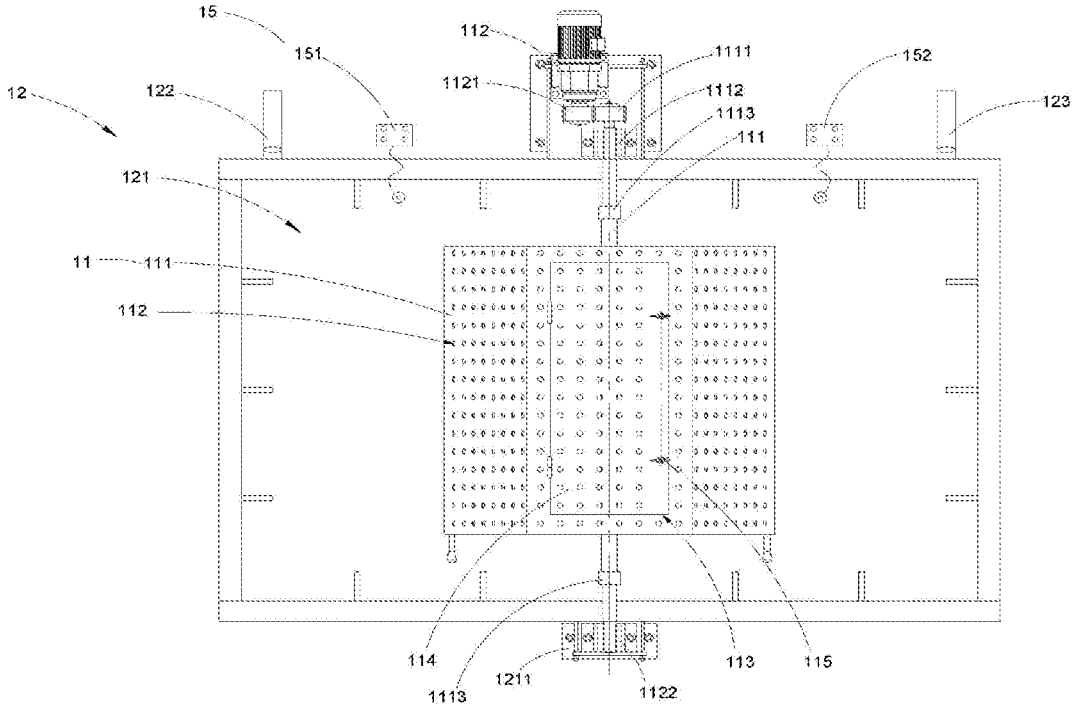
15
151
112
1111
152
12
122
1121
1112
123
1113
111
121
11
111
112
114
1113
1211
1122
113
115

Fig. 3

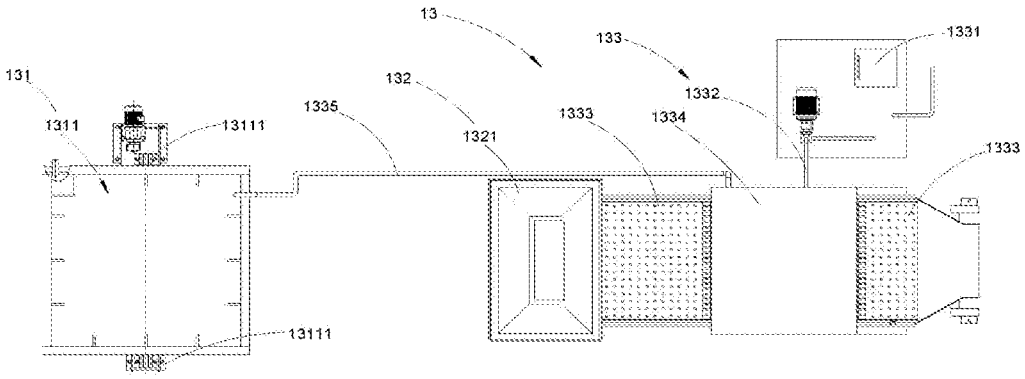
13
131
1311
13111
1335
132
1321
133
1331
1332
1333
1334
1333
13111

Fig. 4

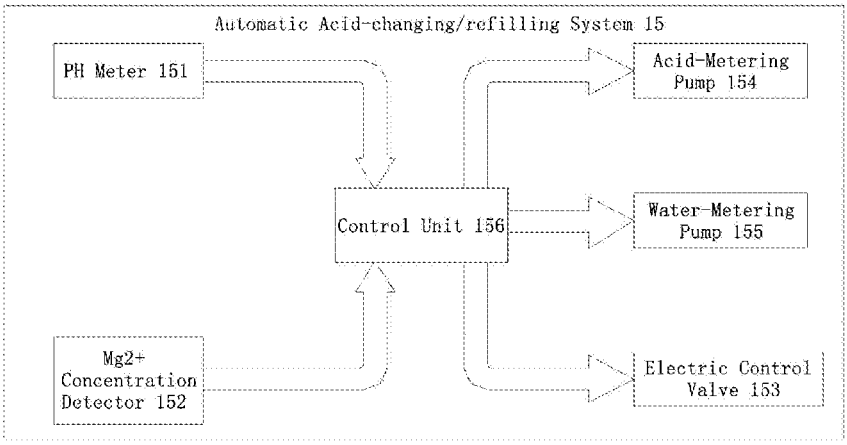
Automatic Acid-changing/refilling System 15
PH Meter 151
Acid-Metering Pump 154
Control Unit 156
Water-Metering Pump 155
Mg2+ Concentration Detector 152
Electric Control Valve 153

Fig. 5

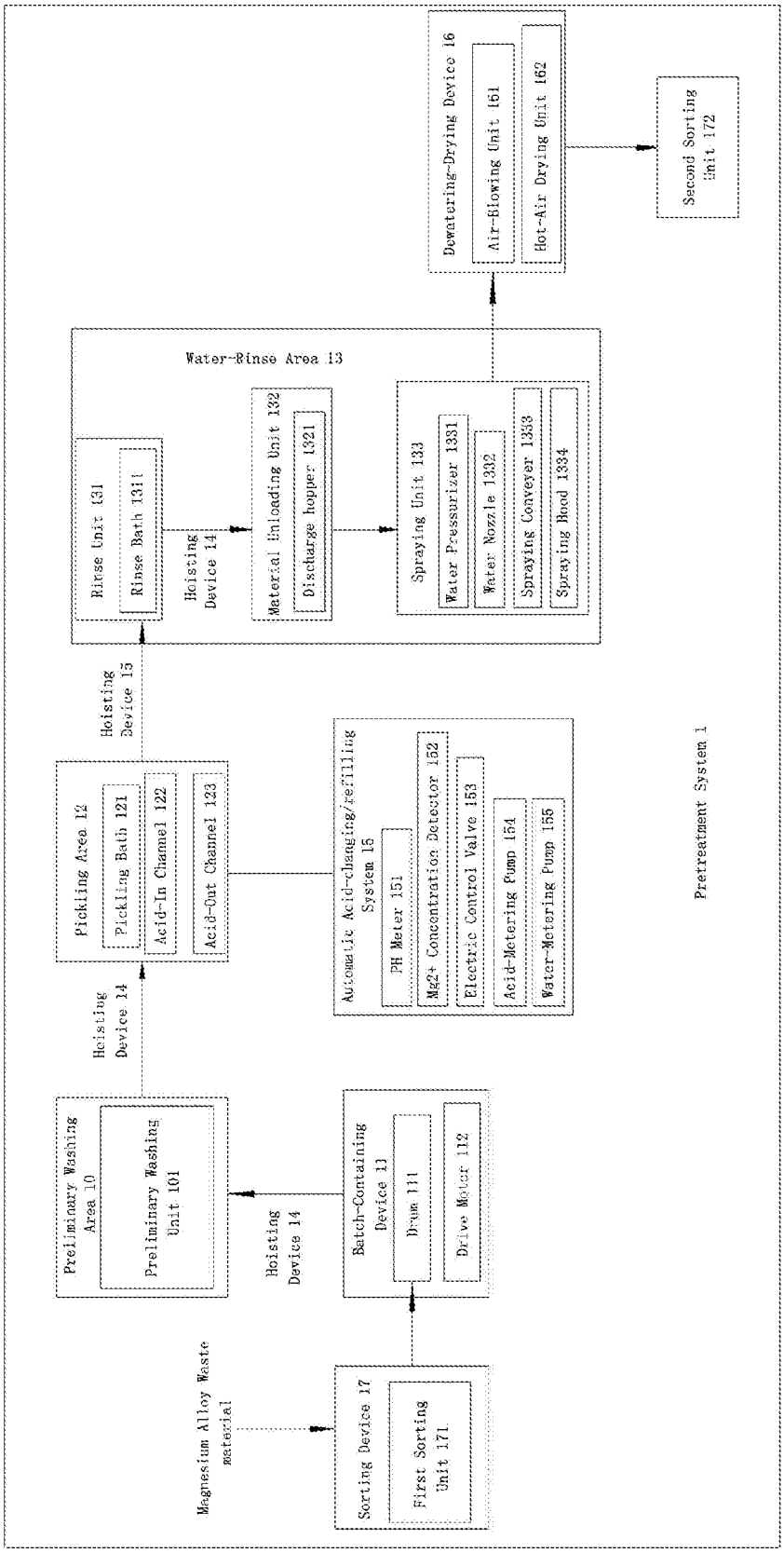
Pretreatment System 1
Magnesium Alloy Waste material
Sorting Device 17
First Sorting Unit 171
Hoisting Device 14
Batch-Containing Device 11
Drum 111
Drive Motor 112
Hoisting Device 14
Preliminary Washing Area 10
Preliminary Washing Unit 101
Hoisting Device 14
Pickling Area 12
Pickling Bath 121
Acid-In Channel 122
Acid-Out Channel 123
Automatic Acid-changing/refilling System 15
PH Meter 151
Mg2+ Concentration Detector 152
Electric Control Valve 153
Acid-Metering Pump 154
Water-Metering Pump 155
Hoisting Device 15
Water-Rinse Area 13
Rinse Unit 131
Rinse Bath 1311
Hoisting Device 14
Material Unloading Unit 132
Discharge hopper 1321
Spraying Unit 133
Water Pressurizer 1331
Water Nozzle 1332
Spraying Conveyer 1333
Spraying Hood 1334
Dewatering-Drying Device 16
Air-Blowing Unit 161
Hot-Air Drying Unit 162
Second Sorting Unit 172

Fig. 6

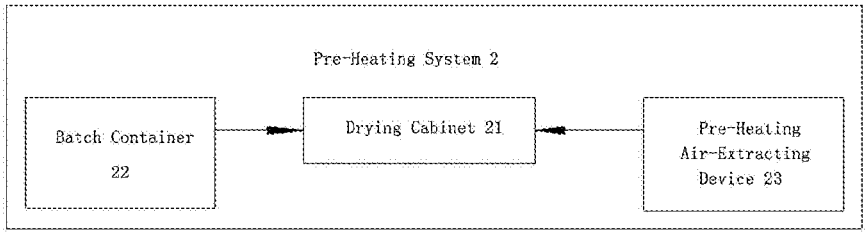

Fig. 7

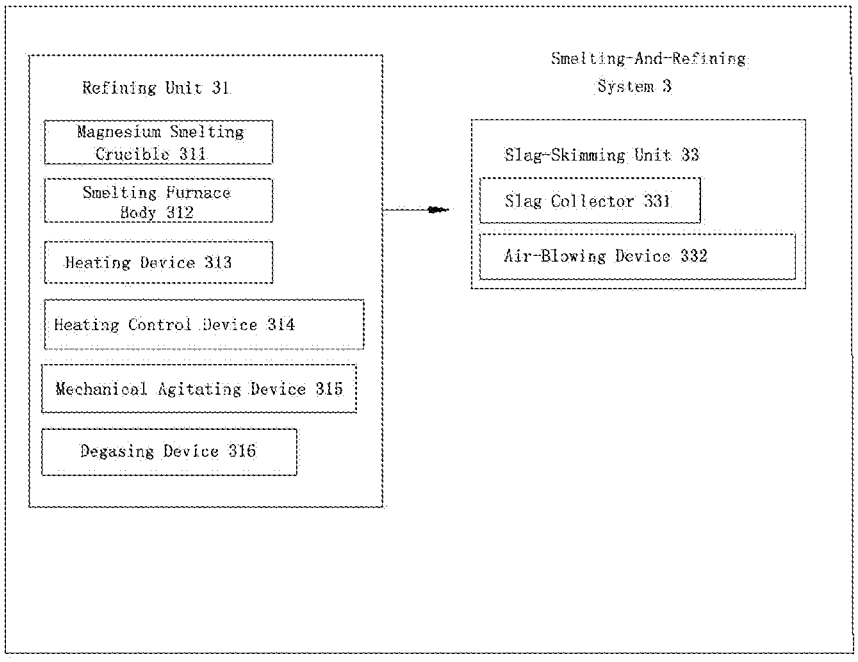

Fig. 8

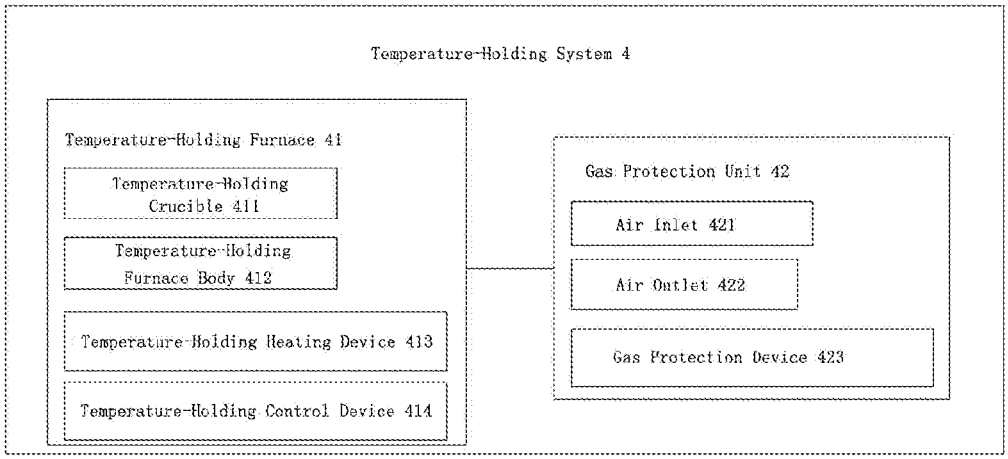

Fig. 9

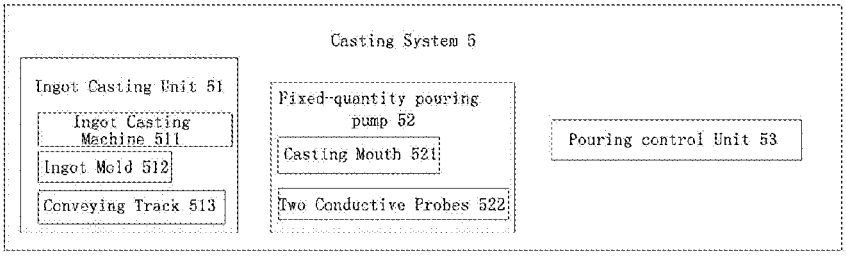
Casting System 5
Ingot Casting Unit 51
Ingot Casting Machine 511
Ingot Mold 512
Conveying Track 513
Fixed-quantity pouring pump 52
Casting Mouth 521
Two Conductive Probes 522
Pouring control Unit 53

Fig. 10

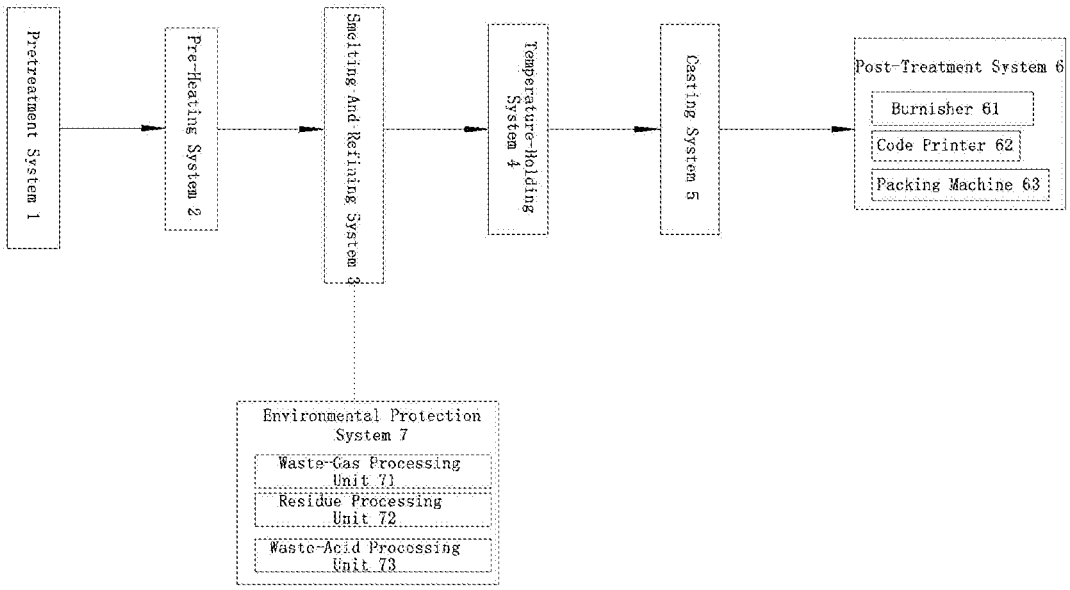
Pretreatment System 1
Pre-Heating System 2
Smelting And Refining System 3
Temperature-Holding System 4
Casting System 5
Post-Treatment System 6
Burnisher 61
Code Printer 62
Packing Machine 63
Environmental Protection System 7
Waste-Gas Processing Unit 71
Residue Processing Unit 72
Waste-Acid Processing Unit 73

Fig. 11

PRODUCTION LINE FOR PRODUCING NATIONAL-STANDARD MAGNESIUM ALLOY INGOTS ON THE BASIS OF MAGNESIUM ALLOY WASTE MATERIAL

CROSS REFERENCE TO RELATED APPLICATIONS

[0001] This application is a continuation of PCT/CN2015/073191 filed Feb. 16, 2015, which is incorporated herein by reference.

BACKGROUND OF THE INVENTION

1. Technical Field

[0002] The present invention relates to production lines for recycling metals, and more particularly to a production line for producing GB-standard magnesium alloy ingots from magnesium alloy waste material.

2. Description of Related Art

[0003] GB standards (hereafter also mentioned as national standard) refer to the Chinese national standards issued by the Standardization Administration of China (SAC), the Chinese National Committee of the ISO and IEC. Magnesium is one of the abundant light metal elements on the earth. Magnesium has a specific weight of 1.74 g/cm^3, equal to only two-thirds of that of aluminum, two-fifths of that of titanium, or one-fourth of steel. Magnesium alloys are alloys made of magnesium as the base and other elements. Magnesium alloys are small in density and high in specific strength and specific stiffness, while having advantages such as possessing great electromagnetic shielding ability, damping performance, vibration reducing capacity, and cutting processability, requiring low processing costs because the energy it consumes for processing is only 70% of that required by aluminum alloy, and being easy to recycle. For these reasons, magnesium and magnesium alloy are considered as green engineering materials of the 21st century, and have been extensively applied to industries such as automobiles, aerospace, 3C, power tools, optic equipment, sporting goods and telecommunication. Presently, as the global manufacturing industry goes toward lightweight, low energy consumption, and low pollution, magnesium alloy components have replaced plastic, aluminum alloy, and even steel ones in many applications.

[0004] According to China Nonferrous Metals Industry Association, China produced 769.7 thousand tons of raw magnesium in 2013, namely 10.22% more than the same period in the previous year, and 297.8 thousand tons of magnesium alloy, namely 43.52% more than the same period in the previous year. However, rapid growth of output of magnesium alloy necessarily brings about sharp increase of magnesium alloy waste material. Fortunately, magnesium alloy waste material is highly recoverable and less energy consuming. Its recovery rate is more than 95%, and the energy consumption for recycle is only 5%-10% of that for raw magnesium production. Therefore, reasonable recovery and reuse of magnesium alloy waste material directly influence the rationally and sustainability of development of magnesium alloy industries, and are of importance to reducing environmental pollution, conserving energy, as well as lowering costs and extending life cycle of magnesium alloy.

[0005] As a starting point of recycling magnesium alloy waste material, magnesium alloy waste material is firstly rated. Recycling waste, discarded material, scrap and swarf of magnesium alloy with rating ensures the grades and full utilization of recycled materials, helping to lower costs. Waste of magnesium and magnesium alloy has eight grades in a draft of international classification standards, as shown in Table A below.

TABLE A

Grades of Waste of Magnesium and Magnesium Alloy

Grade	Description	Source	Example
1	Cleaned and sorted waste	Produced in die-casting processes	Cakes in runners, sprue, burr, flashing and scrapped parts
2	Cleaned and sorted waste, mixed with wooden inclusions and steel inclusions	Produced in die-casting processes	Waste castings containing steel inclusions
3	Grade 1 or 2 waste coated or smeared with paint or greasiness	Produced in die-casting processes	Rejected castings
4	Dry and clean machined debris and cutting scrap	Produced in die-casting processing without lubricator	Machined debris and cutting scrap
5	Machined debris and cutting scrap smeared with oil and water	Produced in die-casting processing with oil or oil-water emulsion lubricator	Machined debris and cutting scrap
6	Slag free of salts	Produced in cleaning smelting furnaces	Slag
7	Slag containing salts	Produced in mold-casting processes under dry condition	Slag
8	Waste other than those of Grades 1 through 7; alloy of different designations mixed and stored for long time		

[0006] Recycle of magnesium alloy waste material on one hand is to recycle inactive or discarded magnesium alloy products, on the other hand is to recycle waste and cutting scrap of magnesium and magnesium alloy. Grades 1 through 7 cover waste and cutting scrap of magnesium and magnesium alloy. The cleaned and sorted waste of Grade 1 can be smelted directly. The waste of Grade 2 that has been cleaned and sorted yet mixed therein with wooden inclusions and steel inclusions can only be smelted when the inclusions have been removed. The waste of Grade 3 that is actually waste of Grade 1 or 2 but further coated or smeared with paint and greasiness must have the paint and greasiness removed before smelted. As to the waste of Grade 4 and Grade 5, such as cutting scrap, machined debris, and chips that contain more oxides and are seriously contaminated, their recycle must be handled with special care. Grade 6 and Grade 7 refer to slag which is too small to be reclaimed, sorted, remelted and regenerated in practice, and waste of these two grades is presently not recycled. The dominant kind of waste currently recycled on the market is Grade 8, namely random mixtures of various designation of alloys coming from inactive or discarded magnesium alloy products, which include cars' wheel hubs, steering wheels, engine cylinder caps, airplane bodies, airplane skin, computer casing and camera casing, summing more than 200,000 tons/year. For optimizing magnesium alloy products' performance and service life, surface treatments such as painting, anodic oxidation, chemical plating, electroplating and surface coating are usually applied during production. Besides, magnesium alloy products in use can accumulate mass greasiness, dirt and oxide layers. All these make the inactive or discarded magnesium alloy products when becoming Grade 8 waste more difficult to process and recycle.

[0007] Presently, magnesium alloy waste material coming from inactive or discarded magnesium alloy products is treated in two ways. The first approach is to have magnesium alloy waste material's surface treated roughly by removing some surface impurities, and to use the treated waste to produce firework coloring agents, desulfurizers or non-standard ingots. The second way is to turn magnesium alloy waste material into magnesium alloy ingots for other uses. While both of the methods reuse magnesium alloy waste material, the first one leads to either degraded use or consumptive use of magnesium alloy waste material, where the resulting products are usually disposable and unrecyclable and thus seriously squander the resources. Therefore, the second way is acknowledged as a better way to treat magnesium alloy waste material.

[0008] Magnesium alloy waste coming from inactive or discarded magnesium alloy products is currently recycled and used to produce magnesium alloy ingots through the following flow: getting magnesium alloy waste material→checking the waste's purity→classifying the waste→washing off coating and foreign objects→preparing material→remelting→removing impurities→adding alloy element→refining→analyzing→casting→making into magnesium alloy ingots. There are two options for realizing this process. The first one is to directly melt recycled and sorted magnesium alloy waste material. For example, as found by Hiroki Tateishi, a Japanese researcher, and his associates, for recycling thin-wall magnesium alloy objects with surface coating, emission of harmful gas can be reduced and inclusions are more easily to be removed when firstly smelting primary magnesium alloy material of a certain weight in the smelting furnace and then adding waste of the same weight, while the resulting magnesium alloy ingots can maintain desired mechanical properties and corrosion resistance. The second way involves sorting the collected magnesium alloy waste material, breaking it into pieces, immersing it in acid, removing surface coating, and after that thoroughly removing various foreign objects in the alloy melt using solvent refining and argon-gas subaeration. The second approach features low development costs and short cycles, and requires less investment in recycling equipment, making it more practical. According to P.R.C. national standards, the requirements for magnesium alloy ingots are listed below (see Table B for composition of GB-standard magnesium alloy ingots):

TABLE B

National-Standard Magnesium Alloy Ingot												
	Chemical Components %											
		Impurities<										
Designation	Mg≥	Fe	Si	Ni	Cu	Al	Mn	Cl	Ti	Pb	Zn	Total Impurities
Mg 99.98	99.98	0.002	0.003	0.0005	0.0005	0.004	0.002	0.002	0.001	0.001	—	0.02
Mg 99.95	99.95	0.003	0.01	0.002	0.01	0.01	0.01	0.003	—	—	0.01	0.05
Mg 99.90	99.90	0.04	0.02	0.001	0.004	0.02	0.03	0.005	—	—	—	0.1
Mg 99.80	99.80	0.05	0.03	0.002	0.05	0.05	0.05	0.005	—	—	—	0.2

[0009] However, in the prior art, there is no way to use magnesium alloy waste material directly as the material for producing GB-standard magnesium alloy ingots, because of the difficulties in processing of recycled magnesium alloy waste material. Existing production lines for processing recycled magnesium alloy waste material have various problems. First, magnesium alloy waste material cannot directly produce GB-standard magnesium alloy ingots via general production process, and various solvents and impurity-removing agents have to be added in the process to reduce impurities in the resulting magnesium alloy ingots to meet the requirements of GB-standard magnesium alloy ingots. Second, it is difficult to clean coating and impurities attached to magnesium alloy waste material, and material loss is considerable, making utilization of magnesium alloy waste material relatively low. For example, China Patent No. CN 101947705A discloses methods for producing magnesium alloy welding wires by adopting magnesium alloy foundry scraps, wherein pickling is performed by means of soaking,

leading to poor pickling effectiveness and consistency plus low efficiency. China Patent No. CN 101736160A also discloses a method for recovering low-level waste of magnesium alloy. The method uses stainless steel containers to receive waste and acid liquid, and uses an agitator to pickle with agitation for three times, each lasting for 30 min. This existing method fails to achieve uniform agitation, which may lead to problems such as unevenly pickling, the agitator getting jammed by waste, long pickling time, and huge loss of material in the pickling process. Third, magnesium alloy waste material after pickling or alkali wash go into subsequent processes directly, so the pretreated magnesium alloy waste material contains water therein. This may bring about gas inclusion in the subsequent processes, which makes reprocessing of magnesium alloy waste material dangerous and lowers utilization. Fourth, in smelting and casting processes, the liquid magnesium alloy (the melt) is not protected from air, and this can cause secondary oxidization, making the casted magnesium alloy ingots contain too many impurities to meet the requirement of the national standards for magnesium alloy ingots. In addition, the prior art fails to handle the waste residue, waste water, and waste gas generated in magnesium alloy waste material's recycling process in a proper and sustainable manner, and this causes environmental pollution and resource wasting. For example, China Patent No. CN101338378A teaches a process for obtaining magnesium alloy ingot by remelting and casting waste magnesium alloy parts, but provides no teaching about the waste liquid. China Patent No. CN101096732A proposes a magnesium and magnesium alloy resource circulatory utilization system. The prior-art system supplies the waste residue, waste water, and waste gas generated in production of magnesium and magnesium alloy to magnesium slag brickfields, calcium carbonate plants, coal slurry plants and heat recovery steam boilers or living/office heating circulating and cooling systems for reuse. However, the waste residue and waste water are reused without having the magnesium ions therein extracted, and this may lead to excessive magnesium in the waste residue and waste water and subjects their reuse to secondary contamination, thus being less environmentally friendly.

[0010] More crucially, all the existing magnesium alloy ingots, particularly GB-standard magnesium alloy ingots, produced from magnesium alloy waste material require addition of a high percentage of high-purity magnesium for making the melt conform to the national standards. None of the known production lines can provide high-effectiveness and high-value recycling and reuse of magnesium alloy waste material, especially magnesium alloy scrap.

[0011] To sum up, there is a need for a production line that uses magnesium alloy waste material from inactive or discarded magnesium alloy products directly as material for producing GB-standard magnesium alloy ingots, so as to optimize utilization of magnesium alloy waste material and accomplish safe and sustainable recycling practice for magnesium alloy waste material.

SUMMARY OF THE INVENTION

[0012] In view of the problems of the prior art, one objective of the present invention is to provide a production line for producing GB-standard magnesium alloy ingots from magnesium alloy waste material, wherein improved equipment in the production line effectively removes coating and surface impurities from magnesium alloy waste material, thereby achieving washing consistency of the magnesium alloy waste material in pickling and water-rinse processes, increasing washing efficiency, and minimizing loss of the magnesium alloy waste material during these processes. The production line allows magnesium alloy waste material to be used directly in producing GB-standard magnesium alloy ingots, thereby increasing utilization of magnesium alloy waste material, conserving resources, and protecting the environment.

[0013] For achieving the foregoing objectives, the present invention adopts the following technical schemes.

[0014] A production line for producing GB-standard magnesium alloy ingots from magnesium alloy waste material comprises: a pretreatment system, a smelting-and-refining system, and a casting system that are in sequence connected, wherein the magnesium alloy waste material passes through the pretreatment system, the smelting-and-refining system, and the casting system in sequence to be converted into the GB-standard magnesium alloy ingots.

[0015] Preferably, the magnesium alloy waste material comes from a discarded magnesium alloy product, which is one or any mix of cars' wheel hubs, steering wheels, engine cylinder caps, airplane bodies, airplane skin, computer casing, mobile phone casing, camera casing, and power tool casing.

[0016] Therein, the pretreatment system includes a high-pressure cleaning device and a pickling line first proposed by the inventor of the present invention, so that the magnesium alloy waste material processed by the high-pressure cleaning device and pickling line can be used as the raw material for making GB-standard magnesium alloy ingots directly.

[0017] As one preferred mode, the pickling line comprises a batch-containing device, a pickling area, and a water-rinse area, in which the batch-containing device contains the magnesium alloy waste material, and the pickling area is independent of the water-rinse area;

[0018] in which pickling line, the batch-containing device sends the magnesium alloy waste material it contains to the pickling area and the water-rinse area for pickling and water rinse in sequence.

[0019] As another preferred mode, the pickling line comprises a batch-containing device, a pickling area, a water-rinse area, and a hoisting device, in which the batch-containing device contains the magnesium alloy waste material, and the pickling area is separated from the water-rinse area, while the hoisting device drives the batch-containing device to travel between the pickling area and the water-rinse area;

[0020] in which pickling line, the hoisting device drives the batch-containing device containing the magnesium alloy waste material therein to enter the pickling area and the water-rinse area for pickling and water rinse in sequence.

[0021] Preferred schemes for any of the foregoing pickling lines are described below.

[0022] Preferably, the magnesium alloy waste material is pickled in the pickling area and rinsed in the water-rinse area, respectively, as the batch-containing device rotates.

[0023] Preferably, the batch-containing device is a power-driven drum, which contains the magnesium alloy waste material and is provided with a rotatory shaft passing through it. For ensuring the drum's stable rotation, the rotatory shaft is such arranged that it is coaxial with the drum's center line and the drum is rotated by the rotatory

shaft's rotation. At this time, magnesium alloy waste material in the drum randomly turns with the drum's movement, so as to ensure sufficient contact between the magnesium alloy waste material and washing liquid. The impurities on the magnesium alloy waste material's surface (especially those in grooves) can be easily taken off when the waste is turning, so as to maintain washing consistency and improve washing efficiency.

[0024] More preferably, the drum is provided with a plurality of through holes, whose diameter is smaller than a lump diameter of the magnesium alloy waste material, preferably smaller than the maximum diameter of the smallest lump of magnesium alloy waste material. This is to prevent the magnesium alloy waste material from coming out from the through holes during pickling and rinse, thereby reducing loss, and this allows washing liquid in the pickling area and the water-rinse area to enter the drum through the through holes and sufficiently contact the magnesium alloy waste material in the drum, thereby ensuring the magnesium alloy waste material's homogeneity during pickling and water rinse, and reducing the overall time for pickling and water rinse.

[0025] More preferably, the through hole has a diameter of 5-30 mm.

[0026] More preferably, the drum is a cylinder or a regular polygonal column.

[0027] More preferably, the drum is made of titanium alloy boards, engineering plastic board or other acid proof and high strength boards, preferable made by soldering titanium alloy boards.

[0028] More preferably, the drum includes a material port and a lid, in which the lid is operable to open or close the material port.

[0029] More preferably, the lid movably covers the material port. In other words, for loading or unloading the drum, the lid is open and the material port is accessible, and when rotating the drum, the lid is shut down, and the drum is allowed to rotate only when the material port is closed.

[0030] More preferably, the lid has its one side moveably connected to the drum's wall at one side of the material port, preferable by means of hinges.

[0031] More preferably, the drum has a handle that is coaxial with or parallel to the drum's center line. As one preferred mode, the handle is disposed outside the drum and fixedly connected to the drum. By rotating the handle, the drum's rotation is controlled to orientate the material port on the drum for loading or unloading. In particularly, the material port faces upward for loading, and faces downward for unloading.

[0032] More preferably, the drum is driven by a drive motor. The drive motor is disposed at one end of the pickling area and/or the water-rinse area. The drive motor drives a rotatory shaft that rotates the drum. As a preferred mode, the drive motor drives the drum to rotate by means of a pair of transmission gears that are disposed at the rotatory shaft and the drive motor, respectively, which engage with each other. The drive motor drives the transmission gear pair to rotate, and in turn rotates the rotatory shaft to drive the drum. As a more preferred mode, there are two drive motors, each disposed at one end of the pickling area and the water-rinse area. The two drive motors drive the drum in the same manner, so the paired gear wheels are structurally identical. As one preferred mode, the transmission gear is located at one end of the rotatory shaft.

[0033] More preferably, the rotatory shaft has its two ends each provided with a rolling bearing for reducing drag when the drum rotates.

[0034] More preferably, the rotatory shaft has its two ends each provided with a hoisting element aligned and moveably connected to the hoisting device. As one preferred mode, the hoisting element is a bearing mounted around the rotatory shaft, and has a diameter not greater than the hoisting device's hook's diameter.

[0035] As one preferred mode, the rotatory shaft is provided or installed with the transmission gear, the rolling bearing, the hoisting element, the drum, the hoisting element, and the rolling bearing in sequence. More preferably, the rotatory shaft is made of titanium alloy or other acid-proof metals or alloy materials thereof.

[0036] Preferably, the hoisting device is power driven a hoisting unit equipped with hooks. The hooks work with the batch-containing device's hoisting elements to drive the batch-containing device to perform material loading, entering the pickling area, exiting the pickling area, entering the water-rinse area, exiting the water-rinse area or material unloading in sequence. With the hoisting device moving the drum in the pickling area and the water-rinse area, less human labor is require and automatic control is achieved.

[0037] More preferably, when the hooks and the rotatory shaft are moveably connected, the hoisting device can drive the batch-containing device. More preferably, the hoisting device can only be started when the hooks and the rotatory shaft are aligned and engaged.

[0038] More preferably, the hoisting unit may be realized using a crane known in the art, and is not of great significance to the present invention. An exemplificative structure thereof will be described below.

[0039] To ensure that the magnesium alloy waste material is in sufficient contact with washing liquid in the pickling and water-rinse processes, the inventor basing on any of the foregoing configurations of the pickling line, makes a structural improvement in the pickling area and the water-rinse area, so that the pickling area and the water-rinse area are adapted to the batch-containing device, thereby allowing the magnesium alloy waste material to contact acid liquid sufficiently in the pickling process to have oxidize layers and impurities on its surface removed and to receive double water-rinse in the water-rinse process so as to thoroughly clean residual acid and residue on the magnesium alloy waste material's surface.

[0040] Preferably, the pickling area includes a pickling bath, an acid-in channel, and an acid-out channel. The acid-in channel and the acid-out channel pass through the pickling bath and are communicated with the pickling bath, respectively. As a preferred mode, the joint between the acid-in channel and the pickling bath is higher in altitude than the joint between the acid-out channel and the pickling bath. In other words, the acid-in channel is located higher than the acid-out channel. The acid-in channel and the acid-out channel control charging and discharging of acid solution to and from the pickling bath, so as to ensure that the magnesium alloy waste material contacts acid liquid sufficiently in the pickling process and has oxide layers and impurities on its surface well removed.

[0041] More preferably, the acid-out channel passes through the lateral wall of the pickling bath. As a preferred mode, the acid-out channel passes through the pickling

bath's lateral wall and the acid-out channel's wall is tangent to the pickling bath's bottom.

[0042] More preferably, the acid-in channel passes through the pickling bath's lateral wall.

[0043] More preferably, the acid-in channel is a double acid-in channel.

[0044] More preferably, the double acid-in channel includes two side tubes extending from the same main tube. The two side tubes pass through the pickling bath's different lateral walls, respectively, so that during acid charging the acid solution in the pickling bath can be prepared more homogeneous.

[0045] More preferably, the two side tubes are disposed at the pickling bath's two opposite lateral walls, respectively.

[0046] Preferably, the pickling bath has a capacity not smaller than the batch-containing device's volume. In other words, the pickling bath's capacity is greater than the drum's volume.

[0047] More preferably, the pickling bath's dimension in its length direction is 20-50 cm greater than the drum's dimension in its height direction.

[0048] More preferably, the pickling bath's dimension in its width direction is 20-100 cm greater than the drum's diameter.

[0049] More preferably, the pickling bath's dimension in its height direction is 10-100 cm greater than the drum's radius.

[0050] More preferably, the pickling bath is provided with a lid to be used when the drum is not in the pickling bath in order to prevent the acid solution from volatilization, to minimize material loss, and to reduce atmospheric pollution.

[0051] More preferably, the pickling bath is made of an acid-proof material, such as engineering plastic or fiber-reinforced plastic.

[0052] Preferably, the pickling bath has two sides thereof each provided with a force-bearing seat, so that the force-bearing seats are coaxial with a center line of the pickling bath in a length direction thereof. As one preferred mode, the force-bearing seat is a concave seat matching the rotatory shaft in shape. When the drum is in the pickling area for pickling, the rotatory shaft's two rotating bearings are received by the two force-bearing seats, respectively, thereby securing the relative position between the drum and the pickling bath, and reducing drag against rotation of the drum (the batch-containing device). In addition, the batch-containing device can only rotate when it is settled on the force-bearing seats so as to further ensure safe operation.

[0053] Preferably, the water-rinse area includes a rinse unit, a material unloading unit, and a spraying unit. The pickled magnesium alloy waste material passes through the rinse unit, the material unloading unit, and the spraying unit in sequence. Since the rinse unit and the spraying unit provide the magnesium alloy waste material with double water-rinse, the magnesium alloy waste material is allowed to contact washing liquid sufficiently in the water-rinse process performed in the water-rinse area, so as to have residual acid and residue on the magnesium alloy waste material's surface removed thoroughly.

[0054] Preferably, the rinse unit is a rinse bath, and the drum of the batch-containing device rotates in the rinse bath to rinse the magnesium alloy waste material.

[0055] More preferably, the rinse bath's capacity is not smaller than the batch-containing device's volume.

[0056] More preferably, the rinse bath's depth is greater than the drum's radius, so as to facilitate the drum's rotation in the rinse bath.

[0057] More preferably, the rinse bath has two ends thereof each provided with a force-bearing seat. The force-bearing seats are such installed that they are coaxial with the rinse bath's center line in its length direction. As one preferred mode, the force-bearing seats are concave seats matching the rotatory shaft in shape. When the drum is rinsing in the rinse bath, the rotatory shaft's two rotating bearings are settled on the two force-bearing seats, respectively, thereby securing the drum with the rinse bath in position and reducing drag against the drum's rotation.

[0058] Preferably, the material unloading unit is a discharge hopper. When the drum is moved by the hoisting device from the rinse bath to right above the material unloading unit, by rotating the drum's handle to make the material port face downward and opening the drum lid, the material falls into the discharge hopper, thereby achieving material unloading.

[0059] Preferably, the spraying unit includes a water pressurizer, water nozzles, a spraying conveyer, and a spraying hood. The water nozzles and the water pressurizer are disposed at one side of the spraying conveyer. The water nozzles and the water pressurizer are connected. The magnesium alloy waste material in the spraying unit is rinsed against by the water nozzles. The spraying hood is a three-side hood and covers the spraying conveyer's two laterals and top, thereby preventing the magnesium alloy waste material from falling when conveying by the spraying conveyer and washing by the water nozzles, reducing loss, and preventing sprinkling water from splash.

[0060] More preferably, the spraying conveyer is a vibrating conveyer board. As one preferred mode, the conveyer board is electrically connected to a vibration motor, and is meshed and sloping, so as to make the material on the vibrating conveyer board move forward evenly under vibration, thereby preventing the material from being piled on the spraying conveyer. As a more preferred mode, the conveyer board has a slope of 5-30 degrees. The sprinkling conveyer has its two sides equipped with retaining plates for preventing the material from falling.

[0061] More preferably, the material unloading unit is disposed at one end of the spraying unit. Preferably it is disposed at the spraying conveyer's one end. The magnesium alloy waste material is unloaded from the discharge hopper material and transferred by the spraying conveyer to enter the spraying unit for secondary water-rinse.

[0062] More preferably, the spraying unit further includes a collecting tube. The collecting tube has its one end disposed below the spraying conveyer and has its opposite end communicated with the rinse unit's rinse bath. The collecting tube collets waste water generated in the sprinkling process for reuse as aqueous solution in the rinse bath.

[0063] Preferably, the pickling line further comprises a dewatering-drying device, for dewatering and desiccating the pickled and water-rinsed material. The dewatering-drying device includes an air-blowing unit and a hot-air drying unit that are connected to each other but not communicated with each other. In addition, the air-blowing unit is connected to the spraying unit in the water-rinse area. The magnesium alloy waste material after the spraying unit passes through the air-blowing unit and the hot-air drying unit in sequence for dewatering and desiccation, so as to

speed up liquid evaporation at the magnesium alloy waste material's surface, thereby ensuring safety in the subsequent processes, and reducing the magnesium alloy waste material's oxidization and the melt's gas inclusion.

[0064] More preferably, the air-blowing unit includes an air-blowing compressor, an air-blowing conveyer, air-blowing nozzles, and an air-blowing hood. The air-blowing hood is a three-side hood and covers the air-blowing conveyer's two laterals and top. The air-blowing nozzles are arranged above the air-blowing conveyer and inside the air-blowing hood. The air-blowing conveyer has its one end connected to the spraying unit in the water-rinse area, and has its opposite end connected to the hot-air drying unit. The air-blowing compressor supplies the air-blowing nozzles with pressurized air. The magnesium alloy waste material in the air-blowing unit is transferred by the air-blowing conveyer and treated by the compressed air gushing from the air-blowing nozzles, so as to have liquid at is surface preliminarily removed, thereby reducing working load in the hot-air drying process.

[0065] More preferably, the hot-air drying unit includes a hot-air compressor, a heat source, hot-air nozzles, a heat-baking conveyer, and a heat-baking hood. The heat-baking hood is a three-side hood and covers the heat-baking conveyer's two laterals and top. The hot-air compressor and the heat source are connected. The hot-air nozzles are disposed above the heat-baking conveyer and inside the heat-baking hood. The heat-baking conveyer has its one end connected to the air-blowing unit's air-blowing conveyer. The hot-air drying unit works as below. The pressurized air generated by the hot-air compressor is heated by the heat source into pressurized hot air. The hot-air compressor generates hot air and makes it gush from the hot-air nozzles. The magnesium alloy waste material transferred by the heat-baking conveyer is dried by the pressurized hot air coming from the hot-air nozzles, so as to evaporate liquid at the magnesium alloy waste material's surface quickly. Therein, the heat source may be one known in the art, such as electric heating or gas heating, as long as it is energy-conserving and environmentally friendly.

[0066] More preferably, the hot-air drying unit further includes an air extractor. The air extractor is disposed at one side of the heat-baking conveyer for quickly exhausting the gas evaporated from the magnesium alloy waste material's surface, thereby preventing gas condensation and secondary contamination.

[0067] For maintaining the acid concentration in a predetermined range throughout the magnesium alloy waste material's pickling process, so as to ensure desired pickling effectiveness, the inventor of the present invention, on the basis of any of the foregoing configurations of the pickling line, adds an automatic acid-changing/refilling system, which monitors variation of the acid liquid throughout the pickling process and automatically adds or changes acid, thereby maintaining the acid concentration in a predetermined range for stable pickling intensity to the magnesium alloy waste material and in turn the pickling effectiveness. Accordingly, the automatic acid-changing/refilling system includes a pH meter, an Mg^{2+} concentration detector, an electric control valve, an acid-metering pump, a water-metering pump, and a control unit. The portion including the pH meter, the Mg^{2+} concentration detector, and the electric control valve are disposed inside the pickling bath. The portion including the acid-metering pump, the water-metering pump, and the control unit are disposed outside the pickling bath. The pH meter, the Mg^{2+} concentration detector, the electric control valve, the acid-metering pump, and the water-metering pump are in data connection with the control unit, preferable connected in parallel to each other. The pH meter regularly measures acidity of the acid solution in the pickling bath, and the Mg^{2+} concentration detector measures the Mg^{2+} concentration in the pickling bath in a real-time manner. The pH meter and Mg^{2+} concentration detector send signals to the control unit according to their measurement, the control unit controlling operations of the electric control valve, the acid-metering pump, and the water-metering pump; the electric control valve controlling acid discharging from the acid-out channel, and the acid-metering pump controlling acid charging from the acid-in channel.

[0068] More preferably, when a pH value measured by the pH meter is below a predetermined pH threshold, the control unit after received the signals controls the acid-metering pump to start and the acid-in channel to open for adding acid to the pickling bath.

[0069] More preferably, when a detected value of the Mg^{2+} concentration detector is over a predetermined Mg^{2+} concentration threshold, the control unit after received the signals opens the electric control valve and the acid-out channel for automatic acid discharge, after which the electric control valve is closed while the control unit starts the acid-metering pump and the water-metering pump to prepare the acid solution again according to a predetermined ratio.

[0070] As a more preferred mode, the pH value ranges between 0 and 7, and the Mg^{2+} concentration value ranges between 0.0 and 3.0 mol/L.

[0071] For removing impurities and coating from the magnesium alloy waste material's surface as much as possible, and reducing impurities in the magnesium alloy waste material, the inventor of the present invention, on the basis of any of the foregoing configurations of the production line, makes structural improvement in the high-pressure cleaning device, the pickling area, the water-rinse area, and the dewatering-drying area in the pretreatment system, so that the pickling area and the water-rinse area are adapted to the batch-containing device. The magnesium alloy waste material is rinsed before and after pickling, so as to remove impurities adhering to the magnesium alloy waste material as many as possible. The cleaned magnesium alloy waste material is then dried so as to evaporate liquid on the magnesium alloy waste material's surface fast, thereby minimizing gas inclusions, ensuring safety in the subsequent processes, and increasing the magnesium alloy waste material's utilization.

[0072] For better cleaning impurities and coating on the surface of magnesium alloy waste material, and removing mass greasiness, dirt and stubborn oxide layers mixed with these substances that are not easy to remove through pickling from the magnesium alloy waste material's surface with consideration to the magnesium alloy waste material's structural variety, especially for removing mass greasiness and dirt accumulated in grooves so as to improve cleaning of the magnesium alloy waste material, reducing impurities in the magnesium alloy waste material, shortening pickling time, and enhancing pickling effectiveness, the inventor of the present invention, on the basis of any of the foregoing configurations of the production line, pioneeringly uses the

high-pressure cleaning device in the pretreatment system as a preliminary washing apparatus for the magnesium alloy waste material before pickling, so that the magnesium alloy waste material is water rinsed before and after pickling, thereby removing impurities from the magnesium alloy waste material as many as possible, and drying the cleaned magnesium alloy waste material, so as to speed up liquid evaporation at the magnesium alloy waste material's surface, thereby reducing gas inclusion, ensuring safety in the subsequent processes, and increasing utilization of the magnesium alloy waste material. As one preferred mode, the high-pressure cleaning device includes a rotatable perforated material-holding device and a high-pressure cleaning machine. The magnesium alloy waste material is placed in the material-holding device so that it rotates in and with the material-holding device. The high-pressure cleaning machine's cleaning nozzles make the generated high-pressure water impact the waste evenly so as to remove harmful impurities from the waste's surface. Rolling of the magnesium alloy waste material ensures all the magnesium alloy waste material in the material-holding device gets equal opportunity to be scrubbed, thereby ensuring uniform washing. In addition, the meshes of the material-holding device allow the high-pressure cleaning water to be discharged timely. The material-holding device is preferably cylindrical. The high-pressure cleaning machine's cleaning nozzles are preferable arranged in the material-holding device and distributed evenly along the material-holding device's axial direction, so as to ensure consistency of washing. It is to be noted that, the specific structure of the high-pressure cleaning device as disclosed in the present invention is of no great significance to implementation of the present invention, as long as it is capable of providing the cleaning pressure as required by the present invention. Preferably, the high-pressure cleaning device is also energy-conserving and environmentally friendly in addition to being effective in cleaning. Any structural improvement in the high-pressure cleaning device of the disclosed production line made by people skilled in the art shall be considered as an improvement made with the inspiration of the present invention.

[0073] Another objective of the present invention is to provide a production line for producing GB-standard magnesium alloy ingots from magnesium alloy waste material. For screening out apparent impurities such as screws, rubber and others waste that not belong to magnesium alloy from the magnesium alloy waste material, thereby minimizing impurities in the magnesium alloy ingots made of the magnesium alloy waste material and making the magnesium alloy ingots conform to P.R.C. national standards, the inventor of the present invention, on the basis of any of the foregoing configurations of the production line, adds a sorting device in the pretreatment system.

[0074] Preferably, the sorting device includes a first sorting unit and a second sorting unit. The first sorting unit is disposed upstream the high-pressure cleaning device, and the second sorting unit connected to the dewatering-drying area is disposed downstream the dewatering-drying area. When the magnesium alloy waste material enters the pretreatment system, it is first sorted by the first sorting unit, and passes through the high-pressure cleaning area, the pickling area, the water-rinse area, and the dewatering-drying area in sequence, before entering the second sorting unit for secondary sorting operation, thereby ensuring screening out impurities that not belong to magnesium alloy waste from the magnesium alloy waste material and preventing that the magnesium alloy product contains too much harmful element which has impacts on performance of the material.

[0075] Preferably, the first sorting unit is a sorting platform, which is a manual sorting platform.

[0076] More preferably, for convenient manual operation, the sorting platform has a height ranging between 1000 and 1200 mm, and a width ranging between 800 and 1200 mm.

[0077] More preferably, the sorting platform is static. As another preferred mode, the sorting platform is a drivable conveyer.

[0078] Preferably, the second sorting unit is at the rear end of the dewatering and drying conveyer, where manual operation is performed on the sorting conveyer to screen out magnesium alloy waste material containing foreign objects.

[0079] More preferably, the second sorting unit conveyer and the drying conveyer are integrated as a single conveyer.

[0080] Another objective of the present invention is to provide a production line for producing GB-standard magnesium alloy ingots from magnesium alloy waste material. For further removing moisture from the magnesium alloy waste material so as to prevent explosion caused by moisture and shorten the subsequent smelting and refining time, the inventor of the present invention, on the basis of any of the foregoing configurations of the production line, adds a pre-heating system, which is disposed between the pretreatment system and the smelting-and-refining system to further remove moisture from the magnesium alloy waste material that has been processed by the pretreatment system, and thus prevent explosion caused by moisture and shorten the subsequent smelting and refining time.

[0081] Preferably, the pre-heating system includes a drying cabinet, a batch container, and a pre-heating air-extracting device. The batch container is movably installed inside the drying cabinet, and the pre-heating air-extracting device is installed inside the drying cabinet. The magnesium alloy waste material is placed into the drying cabinet by means of the batch container. The pre-heating air-extracting device extracts and removes moisture from the drying cabinet, so as to maintain dryness in the drying cabinet.

[0082] More preferably, the batch containers are layered and settled in the drying cabinet like drawers.

[0083] More preferably, the batch container is equipped with wheels for conveniently entering and exiting the drying cabinet.

[0084] More preferably, the batch container is made of meshed low-carbon steel plates, for facilitating thermal conduction and evaporation of generated moisture. More preferably, the mesh's diameter is smaller than the magnesium alloy waste material's minimum lump's maximum diameter.

[0085] More preferably, the mesh has a diameter of 5-10 mm.

[0086] Another objective of the present invention is to provide a production line for producing GB-standard magnesium alloy ingots from magnesium alloy waste material. For fully smelting the magnesium alloy waste material in the refining process that has been processed by the pretreatment system, and for preventing adsorption of impurities during smelting, the inventor of the present invention, on the basis of any of the foregoing configurations of the production line, makes structural improvement in the smelting-and-refining system, in order to enhance the smelting efficiency and

maintain the magnesium alloy's purity. Accordingly, the smelting-and-refining system includes a refining unit, a slag-skimming unit, and a liquid-transferring unit. The slag-skimming unit may be placed in the refining unit. The refining unit is connected to the liquid-transferring unit. The liquid magnesium alloy is melted and refined in the smelting furnace and then transferred to the casting system by the liquid-transferring unit.

[0087] Preferably, the refining unit is a natural gas regenerative smelting furnace, which is equipped with an agitating device and a degasing device. The agitating device agitates the melt in the smelting furnace, and the degasing device reduces the gas content of the liquid magnesium alloy (the melt).

[0088] More preferably, the smelting furnace includes a magnesium smelting crucible, a smelting furnace body, a heating device, and a heating control device. The magnesium smelting crucible is installed on the smelting furnace body. The heating device heats the magnesium smelting crucible, and the heating control device controls the heating device's heating operation.

[0089] More preferably, the magnesium smelting crucible is made of composite steel plates, lined with nickel-free steel plates, while the outer layer is formed by SUS310S stainless steel boards.

[0090] More preferably, the heating device heats the magnesium smelting crucible heating by burning natural gas. Such regenerative heat-exchange burning technology provides advantages of high heat utilization, relatively low energy consumption, and conserving resources.

[0091] More preferably, the degasing device uses argon gas to process the liquid magnesium alloy (the melt) in the magnesium smelting crucible, so as to significantly reduce the gas content of the liquid magnesium alloy (the melt), thereby further refining the liquid magnesium alloy (the melt) and reducing solid impurities in the liquid magnesium alloy (the melt).

[0092] More preferably, the degasing device includes an argon airbrush, a compressed-air drying filter, bottled argon gas, and a pressure controller. The argon airbrush, the bottled argon gas, and the pressure controller are connected to the compressed-air drying filter. The pressure controller controls the compressed-air drying filter, so that the bottled argon gas is dried by the compressed-air drying filter before supplied to the argon airbrush, thereby ensuring proper dryness of the argon gas, preventing moisture from entering the liquid magnesium alloy (the melt) that causes accidental splashing of the liquid magnesium alloy (the melt), and preventing secondary gas inclusion.

[0093] More preferably, the liquid magnesium alloy (the melt) in the smelting furnace is first processed by the refining unit, and then processed by the slag-skimming unit to remove magnesium slag from the liquid magnesium alloy (the melt). The slag-skimming unit includes a slag collector and an air-blowing device. The slag collector is pre-heated and then immersed into the magnesium smelting crucible of the smelting furnace. The air-blowing device blows and lifts magnesium slag from bottom of the magnesium smelting crucible so that the magnesium slag falls into the slag collector, thereby removing magnesium slag from the liquid magnesium alloy (the melt), and increasing concentration of magnesium alloy in the liquid magnesium alloy (the melt).

[0094] More preferably, the air-blowing device blows out noble gas to prevent the liquid magnesium alloy (the melt) from oxidization.

[0095] Preferably, the liquid-transferring unit transfers the liquid magnesium alloy (the melt) that has been processed by the smelting furnace, the refining unit, and the slag-skimming unit in sequence into the casting system to be casted into magnesium alloy ingots. The liquid-transferring unit includes a casting pump, a liquid-in duct, a liquid-out duct, and a liquid-transferring drive motor. The liquid-in duct and liquid-out duct are both connected to the casting pump. The liquid-transferring drive motor controls the casting pump's rotational speed. The liquid magnesium alloy (the melt) is drawn into the casting pump through the liquid-in duct, and delivered into the casting system through the liquid-out duct.

[0096] More preferably, the liquid-transferring drive motor is a variable-frequency speed-control motor.

[0097] Another objective of the present invention is to provide a production line for producing GB-standard magnesium alloy ingots from magnesium alloy waste material. For keeping the liquid magnesium alloy (the melt) obtained in the smelting-and-refining system in liquid phrase, and preventing it from coagulation during transferring to the casting system from the smelting-and-refining system, the inventor of the present invention on the basis of any of the foregoing configurations of the production line, adds a temperature-holding system. The temperature-holding system is disposed between the smelting-and-refining system and a casting system. The temperature-holding system holds the liquid magnesium alloy (the melt) from the smelting-and-refining system at a certain temperature, so that the liquid magnesium alloy (the melt) is maintained as liquid. With prolonged standing at the certain temperature, the melt's purity is further increased and the temperature is easy to control. This also ensures smooth production of plural magnesium smelting furnaces as a transfer. Accordingly, the temperature-holding system includes a temperature-holding furnace and a gas protection unit. The gas protection unit is disposed on the temperature-holding furnace. The gas protection unit introduces dry noble gas into the temperature-holding furnace, so as to prevent the liquid magnesium alloy (the melt) from getting oxidized in the temperature-holding furnace. More preferably, the temperature-holding furnace includes a temperature-holding crucible, a temperature-holding furnace body, a temperature-holding heating device, and a temperature-holding control device. The temperature-holding crucible is disposed on the temperature-holding furnace body. The temperature-holding heating device is disposed inside the temperature-holding furnace body. The temperature-holding heating device is connected to the temperature-holding control device. The temperature-holding control device controls the temperature-holding heating device's heating temperature.

[0098] More preferably, there are partitions in the temperature-holding crucible to divide the temperature-holding crucible into 2-3 sub-chambers. The partition is made of nickel-free steel plates.

[0099] More preferably, the partition is provided with at least one drain hole, and preferable 1-3 drain holes. The drain holes are 200-500 mm away from the temperature-holding crucible's bottom for effectively blocking bottom ash and oxide scale in the liquid magnesium alloy (the melt)

from entering the casting system, thereby ensuring good purity of the liquid magnesium alloy (the melt) used in the casting system.

[0100] More preferably, the temperature-holding crucible is made of composite steel plates, lined with nickel-free steel plates, while the outer layer is formed by SUS310S stainless steel boards.

[0101] More preferably, the temperature-holding heating device adopts spiral high-resistance chromium aluminum alloy resistance wires as heating elements. The resistance wires are inlaid inside the temperature-holding furnace's body.

[0102] More preferably, the resistance wires are such installed that they correspond to sub-chambers in the temperature-holding crucible, receptively.

[0103] More preferably, the resistance wires of different sub-chambers in the temperature-holding crucible are independent of each other, so that the heating area corresponding to each said sub-chamber in the temperature-holding crucible is independent, and the areas can having their heating temperatures adjusted independently by means of the temperature-holding control device, thereby allowing the liquid magnesium alloy (the melt) in different sub-chambers of the temperature-holding crucible to be heated separately, and in turn ensuring more reasonable heat-consumption distribution among the sub-chambers.

[0104] As a preferred mode, every temperature-holding furnace works with 3-4 smelting furnaces in the smelting-and-refining system.

[0105] More preferably, the distance between the temperature-holding furnace and the smelting furnace does not exceed 1 m.

[0106] More preferably, the gas protection unit includes an air inlet, an air outlet, and a gas protection device. The air inlet and the air outlet are disposed on the temperature-holding crucible. The gas protection device includes bottled noble gas, a pressure controller, and an introducing duct. The pressure controller is disposed on the introducing duct. The pressure controller controls output flow of the bottled noble gas. The introducing duct communicates the bottled noble gas with the air inlet, so that when there is liquid magnesium alloy (melt) in the temperature-holding crucible, noble gas is introduced into the temperature-holding crucible continuously to cover the surface of the liquid magnesium alloy (the melt), thereby preventing the liquid magnesium alloy (the melt) from contacting oxygen and in turn getting oxidized.

[0107] Another objective of the present invention is to provide a production line for producing GB-standard magnesium alloy ingots from magnesium alloy waste material. For casting liquid magnesium alloy (melt) into magnesium alloy ingots continuously, while increasing production efficiency for magnesium alloy ingots, increasing utilization of the liquid magnesium alloy (the melt), and conserving resources, the inventor of the present invention, on the basis of any of the foregoing configurations of the production line, improves the casting system so that the liquid magnesium alloy (the melt) processed by the smelting-and-refining system can be made into magnesium alloy ingots fast, thereby preventing incorporation of impurities, enhancing production efficiency, increasing utilization of liquid magnesium alloy (melt), and conserving resources.

[0108] Preferably, the casting system includes an ingot casting unit, a fixed-quantity pouring pump, and a pouring control unit. The liquid magnesium alloy (the melt) is injected into the ingot casting unit by the fixed-quantity pouring pump, and the pouring control unit is connected to the ingot casting unit and the fixed-quantity pouring pump.

[0109] More preferably, the ingot casting unit includes an ingot casting machine, an ingot mold and a conveying track, and the ingot casting machine is divided into a casting area, an ingot cooling area, a material unloading area, an ingot mold cooling area, a pre-heating area, and a coating-applying area. The ingot mold mounted on the conveying track passes through the casting area, the ingot cooling area, the material unloading area, the ingot mold cooling area, the pre-heating area, and the coating-applying area in sequence, and the fixed-quantity pouring pump in the casting area casts the liquid magnesium alloy (the melt) into the ingot mold.

[0110] More preferably, the conveying track is controlled by means of a variable-frequency speed-control motor and an axle-mounted reducer control. The ingot mold on the conveying track passes through the casting area, the ingot cooling area, the material unloading area, the ingot mold cooling area, the pre-heating area, and the coating-applying area in sequence at a speed controlled by the variable-frequency speed-control motor and the axle-mounted reducer.

[0111] More preferably, the casting area is a semi-closed area, where noble gas is used to protect the liquid magnesium alloy (the melt) through the casting process.

[0112] More preferably, the ingot cooling area uses air as cooling medium to cool ingots after casting.

[0113] More preferably, the ingot mold cooling area uses water acts as cooling medium to cool the ingot mold after material unloading.

[0114] More preferably, in the pre-heating area, natural gas or coal gas is burnt as a pre-heating heat source.

[0115] More preferably, in the ingot casting machine, except for the casting area, the material unloading area, the ingot mold cooling area, and the coating-applying area, all the areas are closed and provided with dust hood openings.

[0116] More preferably, the fixed-quantity pouring pump and the pouring control unit are connected. The fixed-quantity pouring pump includes a casting mouth and a conductive probe. The casting mouth corresponds to casting area in the ingot casting machine, and the conductive probe has its two poles electrically connected to the ingot mold and the fixed-quantity pouring pump's end, respectively.

[0117] More preferably, the probe is tangent to a predetermined level of the liquid magnesium alloy, so that when the liquid magnesium alloy reaches the predetermined level, the probe contacts the magnesium liquid to form a short circuit. The pouring control unit receives the short circuit signal and makes the fixed-quantity pouring pump stop casting.

[0118] Another objective of the present invention is to provide a production line for producing GB-standard magnesium alloy ingots from magnesium alloy waste material. For ensuring surface quality of the semi-finished product of the GB-standard magnesium alloy ingots formed by the casting system is up to standard, the inventor of the present invention, on the basis of any of the foregoing configurations of the production line, adds a post-treatment system, which is disposed downstream the casting system. The post-treatment system performs surface processing on the surface of the semi-finished product of the GB-standard magnesium alloy ingots so as to obtain the final product of the GB-standard magnesium alloy ingots.

[0119] Preferably, the post-treatment system includes a burnisher, a code printer, and a packing machine. The semi-finished product of the GB-standard magnesium alloy ingots formed by the casting system gets processed by the burnisher, the code printer, and the packing machine in sequence, so as to obtain qualified GB-standard magnesium alloy ingots as the final product.

[0120] More preferably, the burnisher includes a frame, a burnishing wire wheel, a burnishing motor, and a dedusting device, wherein the burnishing wire wheel is disposed on the frame, and the burnishing motor drives the burnishing wire wheel to burnish the semi-finished product of the GB-standard magnesium alloy ingots, while the dedusting device recycles scrap dust of magnesium alloy and magnesium oxide generated during burnish.

[0121] More preferably, the dedusting device introduces scrap dust of magnesium alloy and magnesium oxide directly into liquid solvent by means of wet dedusting.

[0122] More preferably, the dedusting device and the ingot casting machine's dust hood opening are communicated to collect and remove scrap dust generated in the ingot casting machine.

[0123] More preferably, the code printer is a laser code printer, which is easy to operate and highly efficient.

[0124] Another objective of the present invention is to provide a production line for producing GB-standard magnesium alloy ingots from magnesium alloy waste material. For minimizing environmental pollution and conserving resources, and making the whole production line safe and environmentally friendly, the inventor of the present invention, on the basis of any of the foregoing configurations of the production line, adds an environmental protection system, which processes waste gas, waste residue, and waste acid generated throughout the production line, thereby achieving zero discharge of waste gas, waste residue, and waste acid along the whole production line, and protecting the environment, while conserving resources. Accordingly, the environmental protection system includes a waste-gas processing unit, a waste residue processing unit, and a waste-acid processing unit that are installed separately to process waste gas, waste residue, and waste acid generated in the entire pickling line, respectively.

[0125] Preferably, the waste-gas processing unit is an acid-gas spray column for processing acid gas, and the acid-gas spray column includes a blower, filler, a spraying device, a defogging device, a sprinkling liquid circulating pump, and a absorption column, thereby achieving zero acid gas discharge after acid gas neutralization, and realizing environmentally friendly processing of waste gas.

[0126] More preferably, the waste-gas processing unit further includes a sealed glass chamber, and the exhauster is disposed inside the glass chamber to exhaust acid gas in the glass chamber into the acid-gas spray column.

[0127] More preferably, the rinse units in the pickling area and in the water-rinse area are both disposed in the glass chamber, thereby preventing acid gas from escaping from the pickling area and rinse unit, and in turn minimizing environmental pollution.

[0128] More preferably, the glass chamber has a batch-in gate, a batch-out gate, and a control sensor. The control sensor opens or closes the batch-in gate and the batch-out gate. When magnesium alloy waste material as the raw material enters the pickling line, the batch-in gate opens automatically, and automatically closes when material loading is finished. When outputting the magnesium alloy waste material as the raw material has been processed by the entire pickling line and, the batch-out gate opens automatically and closes automatically when outputting ends.

[0129] More preferably, the residue processing unit is a magnesium residue recycling unit that includes a recycling dissolving tank, a recycling filter, a recycling evaporation crystallizer, and a recycling calcining furnace, in which magnesium slag generated in the production line is processed by the recycling dissolving tank, the recycling filter, the recycling evaporation crystallizer, and the recycling calcining furnace in sequence, so as to be converted into high-purity magnesium oxide and mixed chlorine salts, thereby protecting the environment and conserving resources.

[0130] More preferably, the waste-acid processing unit includes a neutralization pit, a filter, an evaporation crystallizer, and a drier connected in sequence, in which waste acid in the pickling area is processed by the neutralization pit, the filter, the evaporation crystallizer, and the drier in sequence and converted into dry magnesium salts, so as to eliminate waste acid discharge, to protect the environment, and to conserve resources. Therein, the neutralization pit and the acid-out channel are communicated.

[0131] To sum up the foregoing configurations, the production line includes a pretreatment system, the pre-heating system, the smelting-and-refining system, the temperature-holding system, and the casting system arranged in sequence, in which the magnesium alloy waste material is cleaned and impurities removed by the pretreatment system, preheated by the pre-heating system, and refined and/or alloyed into liquid magnesium alloy upon entry into the smelting-and-refining system, maintained at as liquid magnesium alloy by the temperature-holding system, and casted into the GB-standard magnesium alloy ingots by the casting system. In addition, the environmental protection system serves to process and recycle the three kinds of waste in the production line.

[0132] As compared to the existing technologies, the production line for producing GB-standard magnesium alloy ingots from magnesium alloy waste material of the present invention has the following advantages:

[0133] 1. The disclosed production line successfully realizes industrialization of production of GB-standard magnesium alloy ingots using magnesium alloy waste material as the raw material directly, thereby significantly reducing raw material costs for manufacturing GB-standard magnesium alloy ingots, minimizing environmental pollution, conserving energy, and extending service life of magnesium alloy.

[0134] 2. The magnesium alloy waste material is cleaned in three stages, namely preliminary washing, pickling and water rinse. The preliminary washing process used high-pressure rinse. The pickling process is dynamic. The water-rinse process involves rinse and sprinkling, so as to fully remove impurities and residual acid liquid from the magnesium alloy waste material's surface, thereby reducing loss of the magnesium alloy waste material;

[0135] 3. The magnesium alloy waste material when cleaned is contained in the drum and separated from the outside. The magnesium alloy waste material when rotating in the drum evenly and fully contacts acid liquid and water, thereby ensuring homogeneity of pickling and water-rinse, shortening overall washing time, reducing loss of the mag-

nesium alloy waste material, and increasing utilization of the magnesium alloy waste material;

[0136] 4. The cleaned magnesium alloy waste material is repeatedly dried with air drying, hot air drying, and pre-heating drying, so as to speed up liquid evaporation at the magnesium alloy waste material's surface after water rinse, thereby ensuring safety in the subsequent processes, minimizing gas inclusion, and increasing utilization of the magnesium alloy waste material;

[0137] 5. The pickling process is added with the automatic acid adding and changing device that performs regular monitoring to maintain the acid liquid's PH value and the Mg^{2+} concentration in a predetermined range, and automatically add or change acid according to variation, thereby ensuring pickling effectiveness;

[0138] 6. The casting pump transfers the liquid magnesium alloy from the smelting-and-refining system to the temperature-holding system, thereby eliminating the need for pre-heating, and prevent poor pre-heating that blocks pipes and pumps or even leads to safety concern, such as pipe explosion;

[0139] 7. The temperature-holding system keeps the liquid magnesium alloy from the smelting-and-refining system at a certain temperature, so that the liquid magnesium alloy can be further cleaned and well controlled in temperature. The temperature-holding furnace of the temperature-holding system heats different areas separately so it can heat the liquid magnesium alloy in any single sub-chamber, making heat-consumption distribution throughout the heating process more reasonable;

[0140] 8. The casting system is structurally improved so that the entire casting process is continuous, thereby increasing production efficiency, and preventing the liquid magnesium alloy from oxidization during casting; and

[0141] 9. The casted magnesium alloy ingots are burnished, so as to improve surface quality of the magnesium alloy ingots and conform to P.R.C. national standards for magnesium alloy ingots;

[0142] 10. The pickling line is added with an environmental protection system, which processes waste gas, magnesium slag, and waste acid generated in the pickling line, thereby achieving zero discharge of waste gas, magnesium slag, and waste acid, protecting the environment, and conserving resources.

[0143] To sum up, the disclosed production line for producing GB-standard magnesium alloy ingots from magnesium alloy waste material processes the magnesium alloy waste material by passing it through the pretreatment system, the pre-heating system, the smelting-and-refining system, the temperature-holding system, the casting system, and the post-treatment system in sequence, to have coating and impurities at its surface removed, and be processed into magnesium alloy ingots conforming to P.R.C. national standards. The environmental protection system processes waste gas, magnesium slag, and waste acid generated along the production line, so as to eliminate discharge of waste gas, magnesium slag, and waste acid, thereby protecting the environment and conserving resources. The production line has its components well connected and is highly automated. Being easy to operate and highly efficient in production, the production line realizes industrialization where GB-standard magnesium alloy ingots are made 100% from magnesium alloy scraps directly, thereby having promising extensive applications.

BRIEF DESCRIPTION OF THE DRAWINGS

[0144] FIG. **1** is a schematic drawing of a production line for producing GB-standard magnesium alloy ingots from magnesium alloy waste material according to one preferable mode of the present invention;

[0145] FIG. **2** is a schematic drawing of a high-pressure cleaning device in the pretreatment system of the production line for producing GB-standard magnesium alloy ingots from magnesium alloy waste material according to one preferable mode of the present invention;

[0146] FIG. **3** is a schematic drawing of a batch-containing device in the pretreatment system of the production line for producing GB-standard magnesium alloy ingots from magnesium alloy waste material of the present invention;

[0147] FIG. **4** is a schematic drawing of a water-rinse area in the pretreatment system of the production line for producing GB-standard magnesium alloy ingots from magnesium alloy waste material of the present invention;

[0148] FIG. **5** is a flowchart of an automatic acid adding and changing device in the pretreatment system of the production line for producing GB-standard magnesium alloy ingots from magnesium alloy waste material of the present invention;

[0149] FIG. **6** is a flowchart of the pretreatment system of the production line for producing GB-standard magnesium alloy ingots from magnesium alloy waste material of the present invention;

[0150] FIG. **7** is a flowchart of a pre-heating system of the production line for producing GB-standard magnesium alloy ingots from magnesium alloy waste material of the present invention;

[0151] FIG. **8** is a flowchart of a smelting-and-refining system of the production line for producing GB-standard magnesium alloy ingots from magnesium alloy waste material of the present invention;

[0152] FIG. **9** is a flowchart of a temperature-holding system of the production line for producing GB-standard magnesium alloy ingots from magnesium alloy waste material of the present invention;

[0153] FIG. **10** is a flowchart of a casting system of the production line for producing GB-standard magnesium alloy ingots from magnesium alloy waste material of the present invention; and

[0154] FIG. **11** is a flowchart of the production line for producing GB-standard magnesium alloy ingots from magnesium alloy waste material of the present invention.

DETAILED DESCRIPTION OF THE INVENTION

[0155] The invention as well as a preferred mode of use, further objectives and advantages thereof will be best understood by reference to the following detailed description of illustrative embodiments when read in conjunction with the accompanying drawings.

[0156] Any equipment or component whose model is not specified in the following modes can be realized using a commercially available counterpart thereof known in the art, as long as it supports the disclosed production line for producing GB-standard magnesium alloy ingots from magnesium alloy waste material to function normally, and the present invention places no limitation thereon. All such

equipment or components shall be operated and used as indicated in the relevant operational instructions or standards.

[0157] FIG. **1** through FIG. **11** illustrate a production line for producing GB-standard magnesium alloy ingots from magnesium alloy waste material according to one preferable mode of the present invention. With the production line, magnesium alloy waste material can be directly processed into GB-standard magnesium alloy ingots, thereby realizing industrialization of GB-standard magnesium alloy ingots production 100% from magnesium alloy scraps directly. The production line includes a pretreatment system **1**, a pre-heating system **2**, a smelting-and-refining system **3**, a temperature-holding system **4**, and a casting system **5**. The magnesium alloy waste material is processed by the pretreatment system **1**, the pre-heating system **2**, the smelting-and-refining system **3**, the temperature-holding system **4**, and the casting system **5** in sequence to be processed into GB-standard magnesium alloy ingots.

[0158] FIG. **2** through **6** illustrate preferred modes of the pretreatment system **1** of the disclosed production line. Magnesium alloy waste has coating and impurities on its surface removed in the pretreatment system **1**. The pretreatment system **1** includes a high-pressure cleaning device **10** and a pickling line, after processed by which the magnesium alloy waste material can be used directly as raw material of GB-standard magnesium alloy ingots that conforms to P.R.C. national standards.

[0159] FIG. **2** illustrates one preferred mode of a high-pressure cleaning device in the pretreatment system of the disclosed production line. As shown in FIG. **2**, the high-pressure cleaning device **10** includes a revolvable perforated material-holding device **101** and a high-pressure cleaning machine (not shown). The magnesium alloy waste material a is placed in the material-holding device **101** and rotates with the material-holding device **101** inside the material-holding device **101**. Cleaning nozzles **102** of the high-pressure cleaning machine use the generated high-pressure water to impact the waste evenly, thereby removing harmful impurities from the waste's surface. Rolling of the magnesium alloy waste material ensures all the magnesium alloy waste material in the material-holding device gets equal opportunity to be scrubbed, thereby ensuring uniform washing. In addition, the meshes of the material-holding device **101** allow the high-pressure cleaning water to be discharged timely. The material-holding device **101** is cylindrical. The high-pressure cleaning machine's cleaning nozzles **102** are arranged in the material-holding device and distributed evenly along the axial direction of the material-holding device **101**, so as to ensure consistency of washing. The rotatory shaft **1011** of the material-holding device **101** is hollow so that the high-pressure cleaning machine's water pipe **103** can pass through it and position the nozzles **102** inside the material-holding device **101**, thereby optimizing cleaning effects. In addition, for full recycle, a waste water recycling pit may be provided below the material-holding device **101** for collecting and recycling waste water generated during high-pressure cleaning.

[0160] FIG. **3** is a schematic drawing of a pickling line in the pretreatment system of the production line for producing GB-standard magnesium alloy ingots from magnesium alloy waste material of the present invention. As shown in FIG. **3**, the pickling line includes a batch-containing device **11**, a pickling area **12**, a water-rinse area **13**, a hoisting device **14**, an automatic acid-changing/refilling system **15** and a dewatering-drying device **16**. The pickling area **12** and the water-rinse area **13** are separated. The batch-containing device **11** serves to contain the magnesium alloy waste material. The hoisting device **14** moves the batch-containing device **11** between the pickling area **12** and the water-rinse area **13**. The dewatering-drying device **16** dries the magnesium alloy waste material that has been processed in the pickling area **12** and the water-rinse area **13**. The automatic acid-changing/refilling system **15** maintains acid liquid in the pickling area **12** at certain concentration. The magnesium alloy waste material passes through the high-pressure cleaning device **10**, the pickling area **12**, the water-rinse area **13**, and the dewatering-drying device **16** in sequence to be processed into dry and clean magnesium alloy waste material that can be directly used to produce GB-standard magnesium alloy ingots.

[0161] The travel of the magnesium alloy waste material is described below. The magnesium alloy waste material is fed into the batch-containing device **11**, and the hoisting device **14** drives the batch-containing device **11** to take the magnesium alloy waste material into the pickling area **12** and the water-rinse area **13** in sequence for pickling and water-rinse. Afterward, the dewatering-drying device **16** performs dewatering and desiccation. The hoisting device **14** controls movement of the batch-containing device **11**. The hoisting device **14** moves the batch-containing device **11** between the pickling area **12** and the water-rinse area **13**. The magnesium alloy waste material is pickled and rinsed as the batch-containing device **11** rotates in the pickling area **12** and the water-rinse area **13**, respectively. The magnesium alloy waste material in the batch-containing device **11** is separated from external foreign objects, while washing liquid of the pickling area **12** and the water-rinse area **13** can enter the batch-containing device **11** to contact the magnesium alloy waste material therein.

[0162] FIG. **3** is a schematic drawing of a batch-containing device in the pretreatment system of the production line for producing GB-standard magnesium alloy ingots from magnesium alloy waste material of the present invention. As shown in FIG. **2**, the batch-containing device **11** includes a drum **111** and a drive motor **112**. The drum **111** contains the magnesium alloy waste material and has a rotatory shaft **116**. The rotatory shaft **115** passes through the drum **111** and is fixedly connected to the drum **111**, preferably by means of welding. The drive motor **112** is disposed at one end of the pickling area **12**. The drive motor **112** rotates the drum **111** by driving the rotatory shaft **116** to rotate. At this time, the magnesium alloy waste material in the drum **111** get well pickled and rinsed in the pickling area **12** and the water-rinse area **13**. The magnesium alloy waste material in the drum **111** rotates with the drum **111**, thereby ensuring that the magnesium alloy waste material and washing liquid contacts sufficiently. Meanwhile, impurities on the magnesium alloy waste material's surface (especially in grooves) are more likely to come off during the rolling process, thereby ensuring washing consistency and increasing washing efficiency.

[0163] The drum **111** is a cylinder or a regular polygonal column made by welding titanium alloy boards, engineering plastic boards or other acid-proof and high-strength boards together. The drum **111** is provided with plural through holes **112** distributing across the wall defining the drum **111**. The through hole **112** has a diameter smaller than the lump diameter of the minimum lump of the magnesium alloy

waste material. The through hole **112** has a diameter of 5-30 mm, so as to prevent the magnesium alloy waste material from coming off from the through holes **112** in the pickling and water-rinse processes, thereby minimizing loss of the magnesium alloy waste material while allowing solution in the pickling area **12** and the water-rinse area **13** to enter the drum **111** through the through holes **112** to sufficiently contact the magnesium alloy waste material. This ensures homogeneity of the magnesium alloy waste material throughout the pickling and water-rinse processes, and shortens the overall pickling and water-rinse time.

[0164] The drum **111** includes a material port **113** and a lid **114**. The lid **114** opens and closes the material port. The lid **114** is fixed to the drum's wall outside the material port **113** through hinges so that it can cover the material port **113**. The magnesium alloy waste material enters and exits the drum **111** through the material port **113**. For material to enter or exit, the lid **114** and in turn the material port **113** are open. During rotation of the drum **111**, the lid **114** is shut down to close the material port **113**. The drum **111** further includes a handle **115**. The handle **115** is coaxial with or parallel to the center line of the drum **111**. The handle **115** is arranged outside the wall of the drum **111** and fixedly attached to the drum **111**. By rotating the handle **115**, rotation of the drum **111** can be controlled to orient the material port **113** of the drum **111** differently for allowing material to be loaded or unloaded. Particularly, the material port **113** faces upward for material loading, and downward for material unloading.

[0165] The rotatory shaft **116** is a solid, columnar structure made of titanium alloy or other acid-proof metals and alloy materials thereof. When the hoisting device **14** moves the batch-containing device **11**, the rotatory shaft **116** is the major force-bearing component throughout the hoisting process. The rotatory shaft **116** has its one end provided with a transmission gear **1111**, and the drive motor **112** is provided with a matching drive motor gear **1121**. With engagement between the transmission gear **1111** and the drive motor gear **1121**, the drive motor **112** drives the rotatory shaft **116** to rotate, thereby rotating the drum **111**.

[0166] Besides, both ends of the rotatory shaft **116** are provided with rolling bearings **1112** and hoisting elements **1113**. The hoisting elements **1113** and the hoisting devices **14** are in movable and coordinative connection. In the present embodiment, the hoisting elements **1113** are bearings mounted around the rotatory shaft, and have a diameter not greater than the diameter of the hooks of the hoisting device **14**. The rolling bearings **1112** serve to reduce drag against rotation of the drum **111**. As shown in FIG. **2**, along the rotatory shaft **116**, there are transmission gear **1111**, hoisting element **1113**, rolling bearing **1112**, body of the drum **111**, rolling bearing **1112**, and hoisting element **1113** from top to bottom in sequence.

[0167] The hoisting device **14** adopts the structure of any known crane. In the present embodiment, it includes a hoisting motor, a hoisting controller, and a hoisting unit. The hoisting controller is a programmable logic controller. The controller controls the hoisting motor to drive the hoisting unit to move, so as to make the batch-containing device **11** move between and within the pickling area **12** and the water-rinse area **13**. The hoisting device **14** lifts the drum **111** by means of the hoisting elements **1113** at the two ends of the rotatory shaft **116** and aids the drum **111** to perform operations of material-loading, entering the pickling area, exiting the pickling area, entering the water-rinse area, and exiting the water-rinse area in sequence.

[0168] The magnesium alloy waste material is filled in the drum **111** through the batch-containing device **11**, and placed into the pickling area **12** and the water-rinse area **13** by the hoisting device **14** for pickling and water-rinse. For ensuring that the magnesium alloy waste material sufficiently contacts washing liquid in the pickling and water-rinse processes, the inventor basing on any of the foregoing configurations of the pickling line, makes structural improvement in the pickling area **12** and the water-rinse area **13** to adapt them to the batch-containing device **11**. The magnesium alloy waste material sufficiently contacts acid liquid in the pickling process to have oxide layers and impurities removed from its surface. In the water-rinse process, double water-rinse is performed to thoroughly remove residual acid and residue from the magnesium alloy waste material's surface.

[0169] The magnesium alloy waste material is pickled in the pickling area **12** through the batch-containing device **11**. The pickling area **12** includes a pickling bath **121**, an acid-in channel **122**, and an acid-out channel **123**. The acid-out channel **123** passes through the pickling bath's lateral wall and the acid-out channel **123** has its wall tangent to the pickling bath's bottom. The acid-in channel **122** passes through the pickling bath's lateral wall. The acid-in channel **122** is higher than the acid-out channel **123** in altitude. The acid-in channel **122** and the acid-out channel **123** control charging and discharging of acid solution to and from the pickling bath **121**. The acid-in channel **122** is a double acid-in channel. The double acid-in channel includes two side tubes extending from the same main tube. The two side tubes pass through different lateral walls of the pickling bath **121**, respectively. Preferably, the two side tubes are disposed at two opposite lateral walls of the pickling bath, so that during acid charging the acid solution in the pickling bath **121** can be prepared more homogeneous.

[0170] The pickling bath **121** is made of engineering plastic or fiber-reinforced plastic. The pickling bath **121** has a pickling bath lid to close the bath as a pickling room to preventing volatilization of acid solution in the pickling bath **121** when the pickling bath **121** is not in use (having no batch-containing device therein), thereby reducing loss of material and preventing atmospheric pollution. The pickling bath **121** and the drum **111** match each other in size. The dimension of the pickling bath **121** in its length direction is 20-50 cm greater than the dimension of the drum **111** in its height direction. The dimension of the pickling bath **121** in its width direction is 20-100 cm greater than the diameter of the drum **111**. The dimension of the pickling bath **121** in its height direction is 10-100 cm greater than the radius of the drum **111**.

[0171] The pickling bath **121** has its two sides provided with pickling force-bearing seats **1211**. The two pickling force-bearing seat **1211** are such installed that they are coaxial with the center line of the pickling bath **121**. When the drum **111** is in the pickling bath **121**, the two rotating bearings **1112** on the rotatory shaft **116** are settled in the two pickling force-bearing seats **1211**, respectively, thereby securing the relative position between the drum **111** and the pickling bath **121** unchanged and reducing drag against rotation of the drum **111**.

[0172] FIG. **4** schematically depicts the water-rinse area in the pickling line for magnesium alloy waste material of the

present invention. After the drum **111** of the batch-containing device **11** receives pickling in the pickling bath **121** in the pickling area **12**, the hoisting device **14** lifts the drum **111** by means of the two hoisting elements **1113** on the rotatory shaft **116** and moves it to the water-rinse area **13** for water-rinse. As shown in FIG. **3**, the water-rinse area **13** includes a rinse unit **131**, a material unloading unit **132**, and a spraying unit **133**. The pickled magnesium alloy waste material in the water-rinse area **13** is processed by the rinse unit **131**, the material unloading unit **132**, and the spraying unit **133** in sequence. The rinse unit **131** and the spraying unit **133** wash the magnesium alloy waste material. Thus, the pickled magnesium alloy waste material receives two kinds of wash, namely rinse and sprinkling, in the water-rinse area **13**, so as to have residual acid and residue removed from its surface thoroughly.

[0173] When the drum **111** is moved to the water-rinse area **13** from the pickling bath **121** by the hoisting device **14**, the drum **111** first enters the rinse unit **131**. The first water-rinse of the magnesium alloy waste material is performed in the rinse unit **131** for primarily removing residual acid and residue from the magnesium alloy waste material's surface. The rinse unit **131** further includes a rinse bath **1311**. As the drum **111** rotates in the rinse bath **1311**, the magnesium alloy waste material is rinsed. The rinse bath **1311** and the drum **111** match each other in size. The rinse bath **1311** has an area smaller than the area of the pickling bath **121** in the pickling area **12**. The area of the rinse bath **1311** is greater than the horizontal section area of the drum **111**. The rinse bath **1311** has a depth greater than the radius of the drum **111**, thereby allowing smooth rotation of the drum **111** in the rinse bath **1311**.

[0174] The rinse bath **1311** has two ends thereof each provided with a rinse force-bearing seat **13111**. The two rinse force-bearing seats **13111** are such installed that they are coaxial with the center line of the rinse bath **1311**. When the drum **111** is in the rinse bath **1311** for rinse, the two rotating bearings **1112** on the rotatory shaft **116** are settled in the two rinse force-bearing seats **13111**, thereby securing the relative position between the drum **111** and the rinse bath **1311** unchanged, and reducing drag against rotation of the drum **111**.

[0175] After the magnesium alloy waste material in the drum **111** is rinsed in the rinse bath **1311**, the hoisting device **14** uses the two hoisting elements **1113** on the rotatory shaft **116** to lift the drum **111** and move it to the material unloading unit **132**. The material unloading unit **132** includes a discharge hopper **1321**. When the drum **111** is moved from the rinse bath **1311** to the material unloading unit **132** by the hoisting device **14**, the drum **111** with the assistance of the hoisting device **14**, pours the magnesium alloy waste material into the discharge hopper **1321** and thus accomplishes the operation of material unloading.

[0176] The spraying unit **133** and the material unloading unit **132** are connected to each other. The magnesium alloy waste material receives the secondary water-rinse in the spraying unit **133**, to further remove residual acid and residue left on the magnesium alloy waste material's surface. The spraying unit **133** includes a water pressurizer **1331**, water nozzles **1332**, a spraying conveyer **1333**, and a spraying hood **1334**. The discharge hopper **1321** is disposed at one end of the spraying conveyer **1333**. The magnesium alloy waste material unloaded from the discharge hopper **1321** is laid evenly on the spraying conveyer **1333** and conveyed by the spraying conveyer **1333**. The water nozzles **1332** and the water pressurizer **1331** are connected. The magnesium alloy waste material is water-rinsed again in the spraying unit **133** by the water nozzles **1332**. The water nozzles **1332** and the water pressurizer **1331** are disposed at one side of the spraying conveyer **1333**. The spraying hood **1334** is a three-side hood and covers the spraying conveyer **1333** at its two laterals and top, so as to prevent the magnesium alloy waste material from coming off the spraying conveyer **1333** when hit by water from the water nozzles **1332**, thereby reducing material wasting. The spraying conveyer **1333** is a vibrating conveyer board. In the present embodiment, the conveyer board **1333** is electrically connected to a vibration motor, and is meshed and sloping. This not only allows water from the water nozzles **1332** to permeate in the magnesium alloy waste material in the sprinkling process, but also makes the material on the vibrating conveyer board move forward evenly under vibration, thereby preventing the material from being piled on the spraying conveyer. The conveyer board **1333** has a slope of 10 degrees. The sprinkling conveyer has its two sides equipped with retaining plates for retaining the material from falling.

[0177] The spraying unit **133** further includes a collecting tube **1335**. The collecting tube **1335** has its one end disposed below the spraying conveyer **1333**, and an opposite end communicated with the rinse bath **1311** of the rinse unit **131**. The collecting tube **1335** collects waste water generated in the sprinkling process and uses it as a part of the aqueous solution in the rinse bath **1311**. Such recycling and reuse of the waste water in the sprinkling process is helpful to conserve resources.

[0178] After finished material unloading in the water-rinse area **13**, the drum **111** in the batch-containing device **11** is moved by the hoisting device **14** to the initial stage and gets ready for the next round of operations of material-loading, entering the pickling bath, exiting the pickling bath, entering the rinse bath, exiting the rinse bath and material unloading.

[0179] For ensuring safety in the subsequent processes, and reducing the reject rate of reprocessing of the magnesium alloy waste material, the inventor of the present invention adds the pickling line with a dewatering-drying device, so as to quickly evaporate liquid left on the magnesium alloy waste material's surface, thereby ensuring the magnesium alloy waste material's safety in the subsequent processes, reducing gas inclusion, and decreasing the reject rate of reprocessing of the magnesium alloy waste material.

[0180] As shown in FIG. **1**, the dewatering-drying device **16** is disposed at the rear end of the water-rinse area **13**. The dewatering-drying device **16** is connected to the rear end of the spraying conveyer **1333** of the spraying unit **133** of the water-rinse area **13**. The dewatering-drying device **16** includes an air-blowing unit **161** and a hot-air drying unit **162**. The air-blowing unit **161** and the hot-air drying unit **162** are connected together. The air-blowing unit **161** is connected to the spraying unit **133** of the water-rinse area **13**. After the magnesium alloy waste material washed by the spraying unit **133** in the water-rinse area **13** then passes through the air-blowing unit **161** and the hot-air drying unit **162** in sequence for dewatering and desiccation, so as to evaporate liquid from the magnesium alloy waste material's surface with increased speed, thereby ensuring the magnesium alloy waste material's safety in the subsequent processes and reducing gas inclusion.

[0181] The air-blowing unit **161** may be one known in the art that includes an air-blowing compressor, an air-blowing conveyer, an air-blowing nozzle, and an air-blowing hood. The air-blowing hood is a three-side hood and covers the air-blowing conveyer's two laterals and top. The air-blowing nozzles are arranged above the air-blowing conveyer and inside the air-blowing hood. The air-blowing conveyer has its one end connected to the spraying unit in the water-rinse area, and has its opposite end connected to the hot-air drying unit. The air-blowing compressor supplies the air-blowing nozzles with pressurized air. The magnesium alloy waste material in the air-blowing unit is transferred by the air-blowing conveyer and treated by the compressed air gushing from the air-blowing nozzles, so as to have liquid at is surface preliminarily removed, thereby reducing working load in the hot-air drying process.

[0182] The hot-air drying unit **162** is also known in the art and includes a hot-air compressor, a heat source, hot-air nozzles, heat-baking conveyer and heat-baking hood. The heat-baking hood is a three-side hood and covers the heat-baking conveyer's two laterals and top. The hot-air compressor and the heat source are connected. The hot-air nozzles are disposed above the heat-baking conveyer and inside the heat-baking hood. The heat-baking conveyer has its one end connected to the air-blowing unit's air-blowing conveyer. The hot-air drying unit works as below. The pressurized air generated by the hot-air compressor is heated by the heat source into pressurized hot air. The hot-air compressor generates hot air and makes it gush from the hot-air nozzles. The magnesium alloy waste material transferred by the heat-baking conveyer is dried by the pressurized hot air coming from the hot-air nozzles, so as to evaporate liquid at the magnesium alloy waste material's surface quickly. Therein, the heat source may be one known in the art, such as electric heating or gas heating, as long as it is as energy-conserving and environmentally friendly as possible.

[0183] The hot-air drying unit **162** further includes an air extractor. The air extractor is disposed at one side of the heat-baking conveyer for quickly exhausting the gas at the magnesium alloy waste material's surface after evaporation, thereby preventing gas condensation and secondary contamination.

[0184] It is to be noted that, the air-blowing conveyer in the air-blowing unit **161** and the heat-baking conveyer in the hot-air drying unit **162** are both meshed conveyers, so as to facilitate ventilation and water permeation in the magnesium alloy waste material when transferred in the air-blowing unit **161** and the hot-air drying unit **162**. The mesh of the meshed conveyer is smaller than the magnesium alloy waste material's minimum lump diameter.

[0185] FIG. **5** is a flowchart of an automatic acid-changing/refilling system in the pickling line for magnesium alloy waste material according to the present invention. As shown in FIG. **5**, for maintaining the acid liquid concentration in a predetermined range throughout the magnesium alloy waste material's pickling process, so as to ensure desired pickling intensity and pickling effectiveness, the inventor of the present invention adds an automatic acid-changing/refilling system **15** in the pickling line, which monitors variation of the acid liquid throughout the pickling process and automatically adds or changes acid, thereby maintaining the acid liquid concentration and in turn the pickling effectiveness.

[0186] As shown in FIG. **5**, the automatic acid-changing/refilling system **15** includes a pH meter **151**, an Mg^{2+} concentration detector **152**, an electric control valve **153**, an acid-metering pump **154**, a water-metering pump **155**, and a control unit **156**. Therein, the pH meter **151**, the Mg^{2+} concentration detector **152**, and the electric control valve **153** are partially disposed inside the pickling bath **121**, while the acid-metering pump **154**, the water-metering pump **155**, and the control unit **156** are partially disposed outside the pickling bath **121**. The pH meter **151**, the Mg^{2+} concentration detector **152**, the electric control valve **153**, the acid-metering pump **154**, and the water-metering pump **155** are in data connection with the control unit **156**, and are connected in parallel to each other in the present embodiment. Accordingly, the electric control valve **153** controls acid discharging of the acid-out channel **123**, and the acid-metering pump **154** controls acid charging of the acid-in channel **122**. The pH meter **151**, the Mg^{2+} concentration detector **152**, electric control valve **153**, the acid-metering pump **154**, and the water-metering pump **155** are connected to the control unit **156**. The pH meter **151** regularly measures acidity of the acid solution in the pickling bath **121**, and the Mg^{2+} concentration detector **152** measures Mg^{2+} concentration in the pickling bath **121** in a real-time manner. The pH meter **151** and the Mg^{2+} concentration detector **152** send signals to the control unit **156** according to their measurement. The control unit **156** controls operations of the electric control valve **153**, the acid-metering pump **154**, and the water-metering pump **155**.

[0187] When a pH value measured by the pH meter **151** is below a predetermined pH threshold (>7), the control unit **156** receives the signals so as to start the acid-metering pump **154** and open the acid-in channel **122** to add the pickling bath **121** with acid. When a detected value of the Mg^{2+} concentration detector **152** is over a predetermined Mg^{2+} concentration threshold, the control unit **156** receives the signals so as to open the electric control valve **153** and open the acid-out channel **123** for automatic acid discharge, after which the electric control valve **153** is closed while the control unit **156** starts the acid-metering pump **154** and the water-metering pump **155** to prepare the acid solution again according to a predetermined ratio. By regularly measuring the pH value and Mg^{2+} concentration in the pickling bath **121** and automatically adding or changing acid, the acid liquid concentration and Mg^{2+} concentration can be maintained in a predetermined range, thereby ensuring pickling effectiveness.

[0188] For removing impurities and coating from the magnesium alloy waste material's surface as much as possible, and reducing impurities in the magnesium alloy waste material, the inventor of the present invention pioneeringly adds a high-pressure cleaning device **10** in the pretreatment system **1**, and makes structural improvements in the pickling area **12**, the water-rinse area **13**, and the dewatering-drying device **16**. The magnesium alloy waste material is rinsed before and after pickling, so as to remove impurities adhering to the magnesium alloy waste material as many as possible. The cleaned magnesium alloy waste material is then dried so as to evaporate liquid on the magnesium alloy waste material's surface fast, thereby minimizing gas inclusion, ensuring safety in the subsequent processes, and increasing the magnesium alloy waste material's utilization.

[0189] For screening out apparent impurities such as screws and rubber from the magnesium alloy waste material,

thereby minimizing impurities in the magnesium alloy ingots made of the magnesium alloy waste material ensuring purity of the magnesium alloy ingots and making it conform to P.R.C. national standards, the inventor of the present invention, on the basis of any of the foregoing configurations of the production line, adds a sorting device **17** in the pretreatment system **1** so as to facilitate screening out foreign objects from the magnesium alloy waste material, increasing the content of magnesium alloy, minimizing impurities in the magnesium alloy ingots made of the magnesium alloy waste material, ensuring purity of the magnesium alloy ingots and making it conform to P.R.C. national standards.

[0190] The sorting device **17** includes a first sorting unit **171** and a second sorting unit **172**. The first sorting unit **171** is disposed upstream the high-pressure cleaning area **10**, and the second sorting unit **172** is disposed downstream the dewatering and desiccation device **16**. When the magnesium alloy waste material enters the pretreatment system **1**, it is firstly sorted by the first sorting unit **171**, and then passes through the high-pressure cleaning area **10**, the pickling area **12**, the water-rinse area **13**, and the dewatering-drying area **16** in sequence, finally enters the second sorting unit **172** for secondary sorting operation, thereby ensuring screening out impurities from the magnesium alloy waste material and increasing the content of magnesium alloy in the magnesium alloy waste material.

[0191] The first sorting unit **171** is a sorting platform. The sorting platform is a manual sorting platform. For convenient manual operation, the sorting platform is static and has a height of 1000-1200 mm and a width of 800-1200 mm. The second sorting unit **172** includes a sorting conveyer and a sorting drive motor. The sorting conveyer has its one end connected to the dewatering-drying device **16**. The sorting drive motor drives the sorting conveyer to run, where manual operation is performed on the sorting conveyer to screen out magnesium alloy waste material containing foreign objects. The sorting conveyer has its one end connected to the heat-baking conveyer's one end, and the sorting conveyer is lower than the heat-baking conveyer in position, so as to ensure that the magnesium alloy waste material leaving the hot-air drying unit **162** enters the sorting conveyer.

[0192] FIG. **6** is a flowchart of the pretreatment system of the production line for producing GB-standard magnesium alloy ingots from magnesium alloy waste material of the present invention. As shown in FIG. **6**, the magnesium alloy waste material is processed in the pretreatment system **1** as follows. The first sorting unit **171** of the sorting device **17** first performs first sorting to the magnesium alloy waste material, and removes apparent non-magnesium alloy material such as rubber. After the first sorting unit **171**, the magnesium alloy waste material is loaded in the batch-containing device **11**. The hoisting device **15** uses the two hooks **11113** on the center shaft **1111** to lift the drum **111** and places the drum **111** into the high-pressure cleaning area **12** for rotation. After the High-pressure rinse in the high-pressure cleaning area **10**, impurities at the magnesium alloy waste material's surface are removed. When the preliminary rinse is done, the hoisting device **15** uses the two hooks **11113** on the center shaft **1111** to lift the drum **111** again and moves the drum **111** out of the high-pressure cleaning area and into the pickling area. The drum **111** is placed into the pickling bath **131** of the pickling area **12** for rotation. With pickling of the acid liquid in the pickling bath **131**, coating on the magnesium alloy waste material's surface is removed. After pickling, the hoisting device **15** uses the two hooks **11113** on the center shaft **1111** to lift the drum **111** and drives the batch-containing device **11** out of the pickling area and into the water-rinse area. The drum **111** is placed into the rinse unit **141** of the water-rinse area **13** for rotation. The magnesium alloy waste material is then rinsed by water in the rinse bath **1411** of the rinse unit **141**, and has residual acid and residue attached to its surface preliminarily removed. After rinse, the hoisting device **15** uses the two hooks **11113** on the center shaft **1111** to lift the drum **111** and drives batch-containing device **11** out of the rinse unit and into the material unloading unit. The magnesium alloy waste material in the drum **111** is poured into the material unloading funnel **1421** of the material unloading unit **142** with the assistance of the hoisting device **15**. The magnesium alloy waste material coming out of the material unloading funnel **1421** is washed by the water nozzles **1432** of the spraying unit **143**, so as to further remove impurities and acid liquid on the magnesium alloy waste material's surface. The spraying conveyer **1434** sends the magnesium alloy waste material to the dewatering-drying device **16**. The magnesium alloy waste material in the dewatering-drying device **16** passes through the air-blowing unit **161** and the hot-air drying unit **162** in sequence for dewatering and desiccation. The dried magnesium alloy waste material after dewatering and desiccation then receives second sorting performed by the second sorting unit **172** of the sorting device **17**, so as to further remove impurities from the magnesium alloy waste material. To this point, processing of the magnesium alloy waste material in the pretreatment system **1** is finished.

[0193] The pre-heating system **2** is disposed between the pretreatment system **1** and the smelting-and-refining system **3**, for further drying the magnesium alloy waste material processed by the pretreatment system **1**, so as to remove moisture from the magnesium alloy waste material thereby preventing moisture-incurred explosion, and shortening the magnesium alloy waste material's subsequent smelting and refining time. FIG. **7** is a flowchart of the pre-heating system of the production line for producing GB-standard magnesium alloy ingots from magnesium alloy waste material of the present invention. As shown in FIG. **7**, the pre-heating system **2** includes a drying cabinet **21**, a batch container **22**, and a pre-heating air-extracting device **23**. The batch container **22** is movably installed in the drying cabinet **21**. The pre-heating air-extracting device **23** is installed in the drying cabinet **21**. The magnesium alloy waste material is placed into the drying cabinet **21** by means of the batch container **22**. The pre-heating air-extracting device **23** extracts and removes moisture from the drying cabinet **21**, so as to maintain dryness in the drying cabinet **21**. The batch containers **22** are layered and settled in the drying cabinet **21** like drawers. The batch container **22** is equipped with wheels for conveniently entering and exiting the drying cabinet **21**. The batch container **22** is made of meshed low-carbon steel plates. The mesh has a diameter smaller than the maximum diameter of the magnesium alloy waste material's minimum lump. The mesh has a diameter of 5-10 mm for facilitating thermal conduction and evaporation of generated moisture.

[0194] After processed in the pretreatment system **1** and the pre-heating system **2** in sequence, the magnesium alloy waste material is placed into the smelting-and-refining sys-

tem **3** and transformed into liquid magnesium alloy (the melt) in the smelting-and-refining system **3**. For ensuring fully smelting of the pretreated magnesium alloy waste material in the refining process, and preventing adsorption of impurities during the smelting process, the inventor of the present invention, on the basis of any of the foregoing configurations of the production line, makes structural improvements in the smelting-and-refining system **3**. FIG. **8** is a flowchart of the smelting-and-refining system of the production line for producing GB-standard magnesium alloy ingots from magnesium alloy waste material of the present invention. As shown in FIG. **8**, the smelting-and-refining system **3** includes a refining unit **31**, a slag-skimming unit **32**, and a liquid-transferring unit **33**. The slag-skimming unit **32** is placed in the refining unit **31**. The refining unit **31** and the liquid-transferring unit **33** are connected. The liquid magnesium alloy after melted and refined in the smelting furnace is transferred into the casting system **5** by the liquid-transferring unit **33**. The refining unit **31** is a natural gas regenerative smelting furnace **31'**, and is equipped with an agitating device **315** and a degasing device **316**. The agitating device **315** serves to agitate the liquid magnesium alloy in the smelting furnace **31'**. The degasing device **316** serves to reduce the gas content in the liquid magnesium alloy (the melt). The smelting furnace **31'** includes a magnesium smelting crucible **311**, a smelting furnace body **312**, a heating device **313**, and a heating control device **314**. The magnesium smelting crucible **311** is mounted on the smelting furnace body **312**. The heating device **313** heats the magnesium smelting crucible **311**. The heating control device **314** controls heating of the heating device **313**. The magnesium smelting crucible **311** is made of composite steel plates, and lined with nickel-free steel plates, while the outer layer is formed by SUS310S stainless steel boards. The heating device **313** burns natural gas to heat the magnesium smelting crucible **311**. With the regenerative heat-exchange burning technology, advantages of high thermal utilization, relatively low energy consumption, and conserving resources can be achieved. The degasing device **316** uses argon gas to blow the liquid magnesium alloy (the melt) in the magnesium smelting crucible **311**, thereby better reducing the gas content in the liquid magnesium alloy (the melt). The liquid magnesium alloy (the melt) is refined for the second time to reduce the solid impurity content in the liquid magnesium alloy (the melt). The degasing device **316** includes an argon airbrush, a compressed-air drying filter, bottled argon gas, and a pressure controller. The argon airbrush, the bottled argon gas, and the pressure controller are connected to the compressed-air drying filter. The pressure controller controls the compressed-air drying filter. The bottled argon gas is dried by the compressed-air drying filter before supplied to the argon airbrush, thereby ensuring proper dryness of the argon gas, and preventing moisture from entering the liquid magnesium alloy (the melt) to cause splash of the liquid magnesium alloy (the melt) and secondary gas inclusion. The liquid magnesium alloy (the melt) processed by the refining unit **31** is further processed by the slag-skimming unit **32** to remove magnesium slag from the liquid magnesium alloy (the melt). The slag-skimming unit **32** includes a slag collector **321** and an air-blowing device **322**. The slag collector **321** is pre-heated and immersed into the magnesium smelting crucible **311** in the smelting furnace. The air-blowing device **322** blows and lifts magnesium slag from the bottom of the magnesium smelting crucible **311** so that the magnesium slag falls into the slag collector **321**, thereby removing magnesium slag from the liquid magnesium alloy (the melt), and increasing concentration of magnesium alloy in the liquid magnesium alloy (the melt). It is to be noted that the air-blowing device **322** blows noble gas, thereby preventing the liquid magnesium alloy (the melt) from contacting air and getting oxidized.

[0195] The liquid magnesium alloy (the melt) processed by the refining unit **31** (the smelting furnace **31'**) and the slag-skimming unit **32** in sequence is transferred to the casting system **5** by the liquid-transferring unit **33** to be made into magnesium alloy ingots. The liquid-transferring unit **33** includes a casting pump **331**, a liquid-in duct **332**, a liquid-out duct **333**, and a liquid-transferring drive motor **334**. The liquid-in duct **332** and the liquid-out duct **333** are both connected to the casting pump **331**. The liquid-transferring drive motor **334** controls the rotational speed of the casting pump **331**. The liquid-in duct **332** sucks the liquid magnesium alloy (the melt) into the casting pump **331**, and the liquid magnesium alloy (the melt) is then sent to the casting system **5** through the liquid-out duct **333**. The liquid-transferring drive motor **334** is a variable-frequency speed-control motor, which can adapt its speed to different conditions.

[0196] In the process where the liquid magnesium alloy (the melt) is transferred to the casting system **5** by the liquid-transferring unit **34**, for ensuring that the liquid magnesium alloy (the melt) keeps in liquid phase and has no coagulation along its travel from the smelting-and-refining system to the casting system process, the inventor of the present invention on the basis of any of the foregoing configurations of the production line, adds a temperature-holding system **4**. The temperature-holding system **4** is disposed between the smelting-and-refining system **3** and the casting system **5**. The temperature-holding system **4** holds the liquid magnesium alloy (the melt) melted by the smelting-and-refining system **3** at a certain temperature, so that the liquid magnesium alloy (the melt) maintains its liquid state. With prolonged standing at the certain temperature, the melt's purity is further increased and the temperature is easy to control. This also ensures smooth production of plural magnesium smelting furnaces. This also ensures smooth production of plural magnesium smelting furnaces **31'** for successful transfer.

[0197] FIG. **9** is a flowchart of the temperature-holding system of the production line for producing GB-standard magnesium alloy ingots from magnesium alloy waste material of the present invention. As shown in FIG. **9**, the temperature-holding system **4** includes a temperature-holding furnace **41** and a gas protection unit **42**. The gas protection unit **42** is mounted on the temperature-holding furnace **41**. The gas protection unit **42** introduces dry noble gas into the temperature-holding furnace **41** to prevent the liquid magnesium alloy (the melt) from oxidization in the temperature-holding furnace **41**.

[0198] The temperature-holding furnace **41** includes a temperature-holding crucible **411**, a temperature-holding furnace body **412**, a temperature-holding heating device **413**, and a temperature-holding control device **414**. The temperature-holding crucible **411** is disposed on the temperature-holding furnace body **412**. The temperature-holding heating device **413** is disposed inside the temperature-holding furnace body **412**. The temperature-holding heating device **413** and the temperature-holding control device **414**

are connected. The temperature-holding control device **414** controls the heating temperature of the temperature-holding heating device **413**. The liquid-out duct **333** on the liquid-transferring unit **34** is communicated with the temperature-holding crucible **411**. The liquid-out duct **332** sends the liquid magnesium alloy (the melt) to the temperature-holding crucible **411**. The temperature-holding crucible **411** is made of s composite steel plates, and lined with nickel-free steel plates, while the outer layer is formed by SUS310S stainless steel boards. The temperature-holding crucible **411** has partitions that divide the temperature-holding crucible into 2-3 sub-chambers. The partitions are made of nickel-free steel plates. The partition is provided with at least one drain hole, and preferable 1-3 drain holes. The drain hole is 200-500 mm away from the bottom of the temperature-holding crucible **411**. The drain holes can effectively block bottom ash and oxide scale in the liquid magnesium alloy (the melt) from entering the casting system **5**, thereby ensuring the liquid magnesium alloy (the melt) used in the casting system **5** is of great purity. The temperature-holding heating device **413** uses spiral high-resistance chromium aluminum alloy resistance wires as heating elements. The resistance wires are inlaid in the temperature-holding furnace body **412**. The resistance wires when installing are configured to correspond to the sub-chambers of the temperature-holding crucible **411**, respectively. The resistance wires for different sub-chambers of the temperature-holding crucible **411** are independent, so that the heating areas associated to the different sub-chambers of the temperature-holding crucible **411** are independent. The areas can having their heating temperatures adjusted independently by means of the temperature-holding control device **414**, thereby allowing the liquid magnesium alloy (the melt) in different sub-chambers of the temperature-holding crucible **411** to be heated separately, and in turn ensuring more reasonable heat-consumption distribution among the sub-chambers. It is to be noted that, every temperature-holding furnace **41** works with 3-4 smelting furnaces **31'** in the smelting-and-refining systems, thereby increasing production efficiency. The distance between the temperature-holding furnace **41** and each of the smelting furnaces **31'** does not exceed 1 m, thereby preventing coagulation in the liquid-transferring process between the smelting furnace **31'** and the temperature-holding furnace **41**.

[0199] The gas protection unit **42** includes an air inlet **421**, an air outlet **422**, and a gas protection device **423**. The air inlet **421** and the air outlet **422** are disposed on the temperature-holding crucible **411**. The gas protection device **423** includes bottled noble gas, a pressure controller, and an introducing duct. The pressure controller is disposed on the introducing duct. The pressure controller controls the output flow of the bottled noble gas. The introducing duct communicates the bottled noble gas and the air inlet **421**, so that when there is liquid magnesium alloy (the melt) in the temperature-holding crucible **411**, noble gas is introduced to the temperature-holding crucible **411** continuously to cover the surface of the liquid magnesium alloy (the melt), thereby preventing the liquid magnesium alloy (the melt) from contacting oxygen and in turn oxidization.

[0200] The magnesium alloy waste material is melted by the smelting-and-refining system **3** into the liquid magnesium alloy (the melt). The liquid magnesium alloy (the melt) is kept in the temperature-holding system **4** for heat preservation, thereby ensuring that the liquid magnesium alloy (the melt) remains liquid before it enters the casting system **5** for casting. For casting the liquid magnesium alloy (the melt) into magnesium alloy ingots continuously, increasing the production efficiency of magnesium alloy ingots, improving utilization of the liquid magnesium alloy (the melt), and conserving resources, the inventor of the present invention, on the basis of any of the foregoing configurations of the production line, makes improvements in the casting system **5**, so that the liquid magnesium alloy (the melt) processed by the smelting-and-refining system **3** and the temperature-holding system **4** can be made into magnesium alloy ingots quickly, thereby preventing impurity contamination, increasing production efficiency, improving utilization of the liquid magnesium alloy (the melt), and conserving resources.

[0201] FIG. **10** is a flowchart of the casting system of the production line for producing GB-standard magnesium alloy ingots from magnesium alloy waste material of the present invention. As shown in FIG. **10**, the casting system **5** includes an ingot casting unit **51**, a fixed-quantity pouring pump **52**, and a pouring control unit **53**. The liquid magnesium alloy (the melt) is injected into the ingot casting unit **51** by the fixed-quantity pouring pump **52**. The pouring control unit **53** is connected to the ingot casting unit **51** and the fixed-quantity pouring pump **52**. The pouring control unit **53** controls the pouring speed of the fixed-quantity pouring pump **52**.

[0202] The ingot casting unit **51** includes an ingot casting machine **511**, an ingot mold **512**, and a conveying track **513**. The ingot casting machine **511** is divided into a casting area, an ingot cooling area, a material unloading area, an ingot mold cooling area, a pre-heating area, and a coating-applying area. The ingot mold **512** is installed on the conveying track **513** and passes through the casting area, the ingot cooling area, the material unloading area, the ingot mold cooling area, the pre-heating area, and the coating-applying area in sequence. The fixed-quantity pouring pump **52** pours the liquid magnesium alloy (the melt) into the ingot mold **512** in the casting area. The conveying track **513** has a variable-frequency speed-control motor and an axle-mounted reducer control. The ingot mold **512** on the conveying track **513** passes through the casting area, the ingot cooling area, the material unloading area, the pre-heating area, and the coating-applying area in sequence at a speed controlled by the variable-frequency speed-control motor and the axle-mounted reducer.

[0203] The casting area is a semi-closed area, where noble gas is used to protect the liquid magnesium alloy (the melt) through the casting process. The ingot cooling area uses air as cooling medium to cool ingots after casting. The ingot mold cooling area uses water acts as cooling medium to cool the ingot mold after material unloading. In the pre-heating area, natural gas or coal gas is burnt as a pre-heating heat source. In the ingot casting machine **511**, except for the casting area, the material unloading area, the ingot mold cooling area, and the coating-applying area, all the areas are closed and provide with dust hood openings.

[0204] The fixed-quantity pouring pump **52** is connected to the pouring control unit **53**. The fixed-quantity pouring pump **52** includes a casting mouth **521** and a conductive probe **522**. The casting mouth corresponds to the casting area of the ingot casting machine **511**, and the conductive probe **522** has its two poles electrically connected to the ingot mold and the end of the fixed-quantity pouring pump

52, respectively. The probe **522** is tangent to a predetermined level of the liquid magnesium alloy, so that when the liquid magnesium alloy reaches the predetermined level, the probe contacts the magnesium liquid to form a short circuit. The pouring control unit receives the short circuit signal and makes the fixed-quantity pouring pump stop pouring.

[0205] The magnesium alloy ingots formed by the casting system **5** are the semi-finished product of the GB-standard magnesium alloy ingots, and the surface thereof is not of the required quality. In order to make the semi-finished product of the GB-standard magnesium alloy ingots formed by the casting system **5** have qualified surface, the inventor of the present invention, on the basis of any of the foregoing configurations of the production line, adds a post-treatment system **6**. The post-treatment system **6** is disposed downstream the casting system. The post-treatment system **6** provides surface treatment to the semi-finished product of the GB-standard magnesium alloy ingots, so as to obtain the final product of the GB-standard magnesium alloy ingots.

[0206] The post-treatment system **6** includes a burnisher **61**, a code printer **62**, and a packing machine **63**. The semi-finished product of the GB-standard magnesium alloy ingots formed by the casting system **5** then passes through the burnisher **61**, the code printer **62**, and the packing machine **63** in sequence to be processed into the final product of the GB-standard magnesium alloy ingots.

[0207] The burnisher **61** includes a frame, a burnishing wire wheel, a burnishing motor, and a dedusting device. The burnishing wire wheel is disposed on the frame. The burnishing motor drives the burnishing wire wheel to burnish semi-finished products of the GB-standard magnesium alloy ingots. The dedusting device reclaims dust of magnesium alloy and magnesium oxide produced during the burnishing operation. The dedusting device adopts wet scrubbing to introduce dust of the magnesium alloy and magnesium oxide directly into a liquid solvent. The dedusting device is communicated with the dust hood opening of the ingot casting machine **511**, and collects dust from the scrap generated in the ingot casting machine **511**. The code printer **62** is a laser code printer, which is easy to operate and highly efficient.

[0208] For reducing environmental pollution, conserving resources, and making the entire production line safe and environmentally friendly, the inventor of the present invention, on the basis of any of the foregoing configurations of the production line, adds an environmental protection system **7** to process waste gas, magnesium slag and waste acid generated throughout the production line, so that it achieves zero discharge of waste gas, magnesium slag, and waste acid, thereby protecting the environment and conserving resources. Accordingly, the environmental protection system **70** includes a waste-gas processing unit **71**, a residue processing unit **72**, and a waste-acid processing unit **73**. The waste-gas processing unit, the waste residue, and the waste-acid processing unit process waste gas, waste residue, and waste acid generated in the entire pickling line, respectively.

[0209] The exhaust-processing unit **71** is an acid-gas spray column serves to process acid gas. The acid-gas spray column includes a blower, filler, a spraying device, a defogging device, a sprinkling liquid circulating pump, and an absorption column. It neutralizes acid gas to eliminate emission of acid gas, and thus provides environmentally friendly processing to the waste gas.

[0210] The waste-gas processing unit **71** further includes an airtight glass chamber. The exhauster is disposed inside the glass chamber. The exhauster draws the acid gas in the glass chamber into the acid-gas spray column. The rinse units in the pickling area and the water-rinse area are both disposed inside the glass chamber, thereby preventing the acid gas in the pickling area and the rinse unit from escape, and minimizing environmental pollution. The glass chamber has a batch-in gate, a batch-out gate, and a control sensor. The control sensor opens or closes the batch-in gate and the batch-out gate. When magnesium alloy waste material as the raw material enters the pickling line, the batch-in gate opens automatically, and automatically closes when material loading is finished. When magnesium alloy waste material as the raw material has been processed by the entire pickling line and outputs, the batch-out gate opens automatically and closes automatically when output ends.

[0211] The residue processing unit **72** is a magnesium residue recycling unit that includes a recycling dissolving tank, a recycling filter, a recycling evaporation crystallizer, and a recycling calcining furnace, in which magnesium slag generated in the production line is processed by the recycling dissolving tank, the recycling filter, the recycling evaporation crystallizer, and the recycling calcining furnace in sequence, so as to be converted into high-purity magnesium oxide and mixed chlorine salts, thereby protecting the environment and conserving resources.

[0212] The waste-acid processing unit **73** includes a neutralization pit, a filter, an evaporation crystallizer, and a drier connected in sequence, in which waste acid in the pickling area is processed by the neutralization pit, the filter, the evaporation crystallizer, and the drier in sequence and converted into dry magnesium salts, so as to eliminate waste acid discharge, to protect the environment, and to conserve resources. Therein, the neutralization pit and the acid-out channel are communicated.

[0213] FIG. **11** is a flowchart of a production line for producing GB-standard magnesium alloy ingots from magnesium alloy waste material of the present invention. As shown in FIG. **11**, in order to produce magnesium alloy ingots from magnesium alloy waste material, magnesium alloy waste material is first processed by the pretreatment system **1** that selects magnesium alloy waste material and removes oxidation films and other coatings from the surface. The pretreated magnesium alloy waste material is placed into the pre-heating system **2**. The magnesium alloy waste material is dried and pre-heated. The dried magnesium alloy waste material is placed into the smelting-and-refining system **3** to be melted and refined. The melted and refined liquid magnesium alloy (the melt) is transferred to the temperature-holding system **4** for heat preservation, thereby prevent the liquid magnesium alloy (the melt) from coagulation when transferring to the casting system **5**. The liquid magnesium alloy (the melt) in the temperature-holding system **4** is transferred to the casting system **5** where it is formed into the semi-finished product of the GB-standard magnesium alloy. The semi-finished product of the GB-standard magnesium alloy is placed into post-treatment system **6**. The burnisher **61** in the post-treatment system **6** burnish the surface of the semi-finished product of the GB-standard magnesium alloy ingots, so as to obtain GB-standard magnesium alloy ingots that has qualified surface quality as final product. Waste gas, magnesium slag, and waste acid generated in the smelting-and-refining system **3** of the production line are processed

by the exhaust-processing unit **71**, the residue processing unit **72**, and the waste-acid processing unit **73** of the environmental protection system **7**, respectively. The detailed flow is described below.

[0214] The magnesium alloy waste material first enters the pretreatment system **1**, and receives manual sorting in the first sorting unit **171** of the sorting device **17**, with visible impurities such as screws and rubber and other non-magnesium alloy waste materials removed from the magnesium alloy waste material. Then the magnesium alloy waste material enters the material-holding device **101** of the high-pressure cleaning device **10** for high-pressure cleaning, before it is loaded into the drum **111** of the batch-containing device **11**. The hoisting device **14** uses the two hoisting elements **1113** on the rotatory shaft **116** to lift the drum **111** and moves it to the pickling area **12**. The two rotating bearings **1112** on the rotatory shaft **116** are settled on the two pickling force-bearing seats **1211** of the pickling bath **121**, respectively. The drum **11** is placed into pickling bath **121**. The transmission gear **1111** of the rotatory shaft **116** and the motor gear **1121** of the drive motor **112** engage with each other. The drive motor **112** drives the rotatory shaft **116** to rotate, and thereby the drum **111** rotates in the pickling bath **121**. The magnesium alloy waste material in the drum **111** randomly rolls as the drum **111** rotates, thereby ensuring sufficient contact between the magnesium alloy waste material and the acid liquid. Meanwhile, impurities attached to the surface of the magnesium alloy waste material (especially those in grooves) are more likely to come off in the rolling process, thereby harmful impurities on the surface of the magnesium alloy waste material are removed. After pickling, the drum **111** is placed into the rinse unit **131** of the water-rinse area **13** by the hoisting device **14**. The two rotating bearings **1112** of the rotatory shaft **116** are settled in the two rinse force-bearing seats **13111**, respectively. The drum **11** is placed into the rinse bath **1311**, and the drive motor **112** drives the rotatory shaft **116** to rotate and thus drives the drum **111** to rotate for rinse. The magnesium alloy waste material in the drum **111** rolls randomly with the drum **111**, thereby ensuring sufficient contact between magnesium alloy waste material and water. The magnesium alloy waste material receives first water-rinse in the rinse bath **311** for preliminarily removing residual acid and residue on the magnesium alloy waste material's surface. After rinse, the drum **111** is moved by the hoisting device **14** and placed into the material unloading unit **132**. The drum **111** performs material unloading via the discharge hopper **1321** with the assistance of the hoisting device **14**. The spraying conveyer **1333** of the spraying unit **133** has one end thereof disposed below the discharge hopper **1321**. The magnesium alloy waste material unloaded from the discharge hopper **1321** is laid evenly on the spraying conveyer **1333**. The spraying conveyer **1333** conveys it to a place below the water nozzles **1332**. The water nozzles **1332** sprinkle water on the magnesium alloy waste material on the spraying conveyer **1333**. The magnesium alloy waste material is thus washed for a second time by the spraying unit **133**, so as to further clean residual acid and residue left on the magnesium alloy waste material's surface. After the magnesium alloy waste material receives water-rinse through the entire water-rinse area **13**, it is transferred to the dewatering-drying device **16**. In the dewatering-drying device **16**, the air-blowing unit **161** preliminarily removes liquid on the magnesium alloy waste material's surface, and the hot-air drying unit **162** provides secondarily drying by hot-air, thereby obtaining dry magnesium alloy waste material with its surface stripped. It then enters the second sorting unit **172** for second sorting, thereby ensuring that all the impurities other than magnesium alloy waste material in the magnesium alloy waste material are cleaned. This allows the magnesium alloy waste material to be used directly as raw material for producing the GB-standard magnesium alloy ingots. The pretreatment process thus ends here. Afterward, the batch container **22** of the pre-heating system **2** carrying the waste into the drying cabinet **21**. The pre-heating air-extracting device **23** extracts moisture from the drying cabinet **21** for pre-heating and drying. The magnesium alloy waste material then enters the smelting-and-refining system **3** to be processed into magnesium alloy melt, namely magnesium alloy in the form of liquid. It first enters the smelting furnace **31'** of the refining unit **31** to be heated and melted. With operation of the agitating device **315** and the degasing device **316**, the waste is refined and/or alloyed into liquid magnesium alloy. Then the slag-skimming unit **32** removes magnesium slag from the liquid magnesium alloy by pre-heating the slag collector **321** and immersing it into the magnesium smelting crucible **311** in the smelting furnace. The air-blowing device **322** blows magnesium slag from the bottom of the magnesium smelting crucible **311** and makes it fall in the slag collector **321**, thereby removing magnesium slag from the magnesium alloy melt, increasing magnesium alloy's purity in the magnesium alloy melt. The liquid magnesium alloy is then drawn into the casting pump **331** through the liquid-in duct **332** of the liquid-transferring unit **33**. The liquid-out duct **333** thus transfers it into the temperature-holding system **4** or the casting system **5**. In the temperature-holding system **4**, the liquid magnesium alloy is sent through the liquid-out duct **316** to the temperature-holding crucible **411** of the temperature-holding furnace **41** in the temperature-holding system **4** to hold the temperature while standing still. The liquid magnesium alloy is poured into the ingot mold **512** of the ingot casting unit **51** through the fixed-quantity pouring pump **52** at a speed controlled by the pouring control unit **53**, thereby forming magnesium alloy ingots. The waste is processed by the post-treatment system **6** through the burnisher **61**, the code printer **62**, and the packing machine **63** in sequence to obtain the final product of the GB-standard magnesium alloy ingot.

[0215] The present invention has been described with reference to the preferred embodiments and it is understood that the embodiments are not intended to limit the scope of the present invention. Moreover, as the contents disclosed herein should be readily understood and can be implemented by a person skilled in the art, all equivalent changes or modifications which do not depart from the concept of the present invention should be encompassed by the appended claims.

What is claimed is:

1. A production line for producing GB-standard magnesium alloy ingots from magnesium alloy waste material, being characterized in comprising: a pretreatment system, a smelting-and-refining system, and a casting system that are in sequence connected,

wherein the magnesium alloy waste material passes through the pretreatment system, the smelting-and-refining system, and the casting system in sequence to be converted into the GB-standard magnesium alloy ingots;

wherein the pretreatment system includes a high-pressure cleaning device and a pickling line.

2. The production line of claim **1**, wherein the pickling line comprises a batch-containing device, a pickling area, and a water-rinse area,

wherein the batch-containing device contains the magnesium alloy waste material, and the pickling area is independent of the water-rinse area; and

wherein the material travels in the pickling line in such manner: after fed into the batch-containing device, the magnesium alloy waste material is sent by the batch-containing device to the pickling area and the water-rinse area for pickling and water rinse in sequence.

3. The production line of claim **1**, wherein the pickling line comprises a batch-containing device, a pickling area, a water-rinse area, and a hoisting device,

wherein the batch-containing device contains the magnesium alloy waste material, and the pickling area is independent of the water-rinse area, and the hoisting device drives the batch-containing device to travel between the pickling area and the water-rinse area; and

wherein the material travels in the pickling line in such manner: after feeding the magnesium alloy waste material into the batch-containing device, the batch-containing device driven by the hoisting device enters the pickling area and the water-rinse area in sequence for pickling and water rinse respectively.

4. The production line of claim **2**, wherein the magnesium alloy waste material is pickled in the pickling area and rinsed in the water-rinse area, respectively, as the batch-containing device rotates.

5. The production line of claim **2**, wherein the batch-containing device is a power-driven drum, which power-driven drum contains the magnesium alloy waste material and is provided with a rotatory shaft passing through the drum.

6. The production line of claim **3**, wherein the hoisting device is a power-driven hoisting unit equipped with hooks, which hooks work with the hoisting elements of the batch-containing device to drive the batch-containing device to perform the operations of loading material, entering the pickling area, exiting the pickling area, entering the water-rinse area, exiting the water-rinse area or unloading material in sequence.

7. The production line of claim **2**, wherein the pickling area includes a pickling bath, an acid-in channel, and an acid-out channel,

wherein the acid-in channel and the acid-out channel pass through the pickling bath and get communicated with the pickling bath, respectively.

8. The production line of claim **2**, wherein the water-rinse area includes a rinse unit, a material unloading unit and a spraying unit,

wherein the pickled magnesium alloy waste material passes through the rinse unit, the material unloading unit, and the spraying unit in sequence, so that the rinse unit and the spraying unit perform double water rinse on the magnesium alloy waste material.

9. The production line of claim **8**, wherein the spraying unit includes a water pressurizer, a water nozzle, a spraying conveyer, and a spraying hood,

wherein the water nozzles and the water pressurizer are disposed at one side of the spraying conveyer and the water nozzles and the water pressurizer are connected with each other, and the magnesium alloy waste material in the spraying unit is rinsed again by the water nozzle

wherein the spraying hood is a three-side hood covering the spraying conveyer's two laterals and top, and wherein the spraying conveyer is a vibrating conveyer board.

10. The production line of claim **2**, wherein the pickling line further comprises a dewatering-drying device, for dewatering and desiccating the pickled and water-rinsed material.

11. The production line of claim **2**, wherein the pickling line further comprises an automatic acid-changing/refilling system, which includes a pH meter, an Mg2+ concentration detector, an electric control valve, an acid-metering pump, a water-metering pump, and a control unit,

wherein the portion of the pH meter, the Mg2+ concentration detector, and the electric control valve are disposed inside the pickling bath, while the portion of the acid-metering pump, the water-metering pump, and the control unit are disposed outside the pickling bath;

wherein the pH meter, the Mg2+ concentration detector, the electric control valve, the acid-metering pump, and the water-metering pump are in data connection with the control unit,

wherein the pH meter serves to regularly measure acidity of an acid solution in the pickling bath, the Mg2+ concentration detector serves to measure Mg2+ concentration in the pickling bath in a real-time manner, the pH meter and the Mg2+ concentration detector send signals to the control unit according to their measurement for controlling operations of the electric control valve, the acid-metering pump, and the water-metering pump by the control unit;

the electric control valve controls acid discharging via the acid-out channel, and the acid-metering pump controls acid charging via the acid-in channel.

12. The production line of claim **1**, wherein the high-pressure cleaning device in the pretreatment system acts as a preliminary washing apparatus before the magnesium alloy waste material is pickled, and the high-pressure cleaning device includes a revolvable perforated material-holding device and a high-pressure cleaning machine,

wherein the magnesium alloy waste material is placed in the material-holding device so as to rotate with the material-holding device, and cleaning nozzles of the high-pressure cleaning machine generates high-pressure water to impact the waste evenly; and

in the pretreatment system, the magnesium alloy waste material is cleaned by the high-pressure cleaning device and then enters the pickling line for further cleaning.

13. The production line of claim **12**, wherein the cleaning nozzles of the high-pressure cleaning machine are arranged within the material-holding device and distributed evenly in an axial direction of the material-holding device.

14. The production line of claim **1**, wherein the pretreatment system further comprises a sorting device, for screening out impurities other than magnesium alloy waste material from the magnesium alloy waste material.

15. The production line of claim **14**, wherein the sorting device includes a first sorting unit and a second sorting unit,

wherein the first sorting unit is disposed upstream the high-pressure cleaning device, and the second sorting unit is disposed downstream the pickling line;

wherein the material travels in the pretreatment system in such manner: the magnesium alloy waste material is sorted and has impurities removed by the first sorting unit sorting, and then is cleaned by the high-pressure cleaning device, enters the pickling line for further cleaning, and is sorted and has impurities removed again by the second sorting unit.

16. The production line of claim **1**, wherein the production line further comprises a pre-heating system that is located between the pretreatment system and the smelting-and-refining system, for further removing moisture from the magnesium alloy waste material that has been processed by the pretreatment system,

wherein the magnesium alloy waste material is processed by the pretreatment system, and preheated by the pre-heating system before entering the smelting-and-refining system where the magnesium alloy waste material is refined into liquid magnesium alloy.

17. The production line of claim **1**, wherein the smelting-and-refining system includes a refining unit, a slag-skimming unit, and a liquid-transferring unit,

wherein the slag-skimming unit can be placed into the refining unit, and the refining unit is connected to the liquid-transferring unit, so that liquid magnesium alloy generated from the smelting furnace is transferred into the casting system through the liquid-transferring unit.

18. The production line of claim **1**, wherein the casting system includes an ingot casting unit, a fixed-quantity pouring pump, and a pouring control unit,

wherein liquid magnesium alloy is poured into the ingot casting unit by the fixed-quantity pouring pump, and the pouring control unit is connected to the ingot casting unit and the fixed-quantity pouring pump.

19. The production line of claim **1**, wherein the production line further comprises a environmental protection system including a waste-gas processing unit, a waste-residue processing unit and a waste-acid processing unit, which units are independent of each other, so that the waste-gas processing unit, the waste-residue processing unit, and the waste-acid processing unit process waste gas, waste residue, and waste acid generated in the entire pickling line, respectively.

20. The production line of claim **1**, wherein the production line includes a pretreatment system, a pre-heating system, a smelting-and-refining system, a temperature-holding system, and a casting system in sequence,

wherein the magnesium alloy waste material is cleaned by the pretreatment system to remove impurities, after preheated by the pre-heating system the magnesium alloy waste material enters the smelting-and-refining system to be refined and/or alloyed into liquid magnesium alloy, which is then maintained at as liquid magnesium alloy by the temperature-holding system, and finally be casted into the GB-standard magnesium alloy ingots by the casting system.

* * * * *