J. H. BLANK & C. S. DUNGAN.

GARBAGE CAN.

APPLICATION FILED APR. 19, 1915.

1,169,606.

Patented Jan. 25, 1916.

2 SHEETS—SHEET 1.

Fig. 1

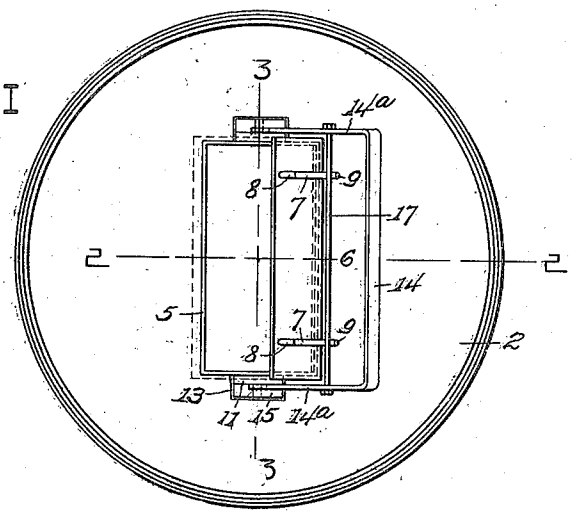

Fig. 2

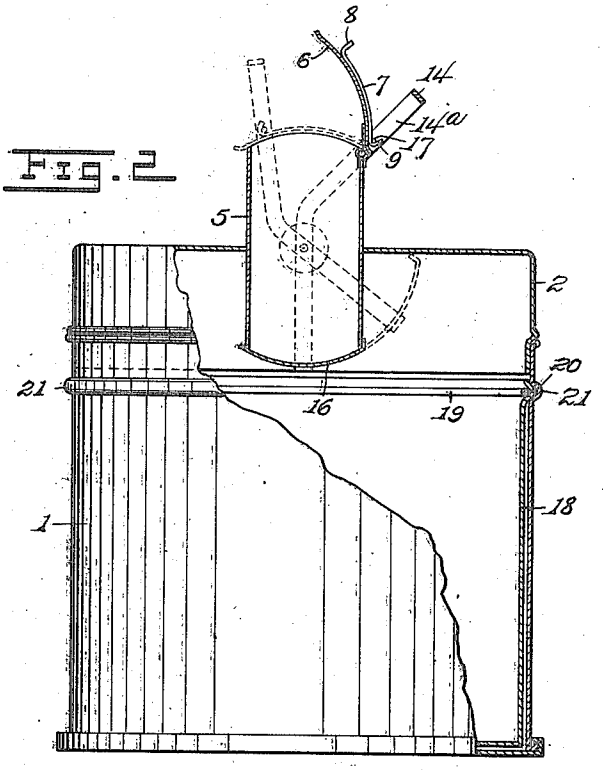

INVENTORS

John H. Blank.

BY Clark S. Dungan.

H. E. Dunlap Jr.

ATTORNEY.

J. H. BLANK & C. S. DUNGAN.

GARBAGE CAN.

APPLICATION FILED APR. 19, 1915.

1,169,606. Patented Jan. 25, 1916.

2 SHEETS—SHEET 2.

Fig. 3

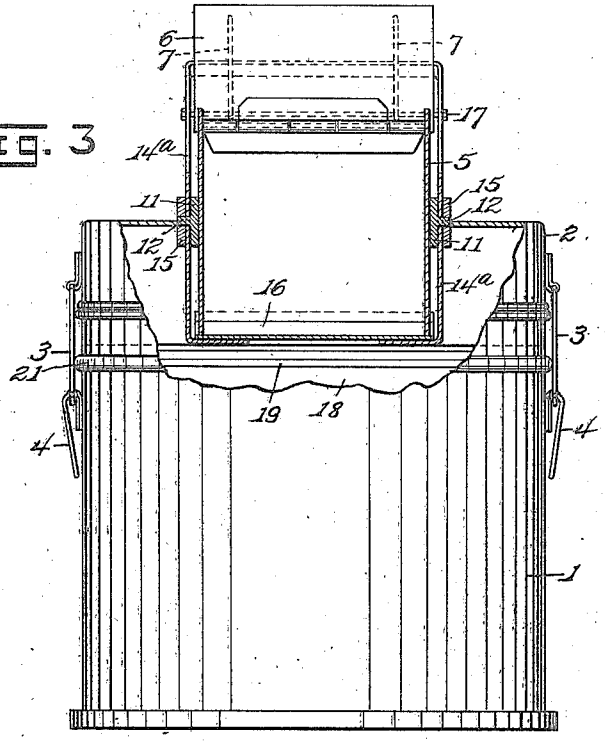

Fig. 4

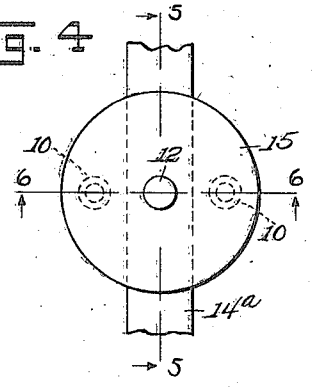

Fig. 5

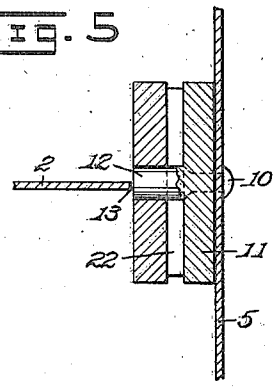

Fig. 6

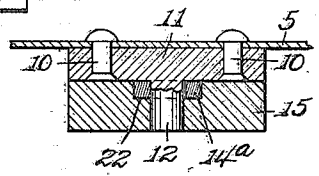

INVENTORS

John H. Blank.

Clark S. Dungan.

By H. C. Denslow

ATTORNEY

UNITED STATES PATENT OFFICE.

JOHN H. BLANK AND CLARK S. DUNGAN, OF FOLLANSBEE, WEST VIRGINIA.

GARBAGE-CAN.

1,169,606. Specification of Letters Patent. Patented Jan. 25, 1916.

Application filed April 19, 1915. Serial No. 22,292.

To all whom it may concern:

Be it known that we, JOHN H. BLANK, and CLARK S. DUNGAN, citizens of the United States of America, and residents of Follansbee, county of Brooke and State of West Virginia, have invented certain new and useful Improvements in Garbage-Cans, of which the following is a specification.

This invention relates broadly to garbage receptacles, and more specifically to a garbage can of a sanitary type.

The primary object of the invention is to provide a can or receptacle for garbage or other refuse provided with means whereby exposure of the contents is effectually prevented except when the cover is removed for dumping purposes.

A further object is to provide a device of the character mentioned comprising a main receptacle and a superposed receiving receptacle and wherein the raising of the cover of the receiving receptacle, as for the deposit of material, acts to automatically close communication between said receiving receptacle and the main receptacle, and wherein the closing of said cover acts to open communication between said receptacles, permitting deposited material to drop to the main receptacle.

With these and other objects in view, the invention resides in the features of construction, arrangement of parts and combinations of elements which will hereinafter be fully described, reference being had to the accompanying drawings, forming a part of this specification, in which—

Figure 1 is a top plan view of the invention showing the cover of the receiving receptacle, or compartment, raised; Fig. 2 is a partial central vertical section of the same on the line 2—2, Fig. 1; Fig. 3 is a similar section on the line 3—3, Fig. 1; Fig. 4 is an outer face view, enlarged, of the bearing for the swinging handle or bail; and—Figs. 5 and 6 are sections of the same taken respectively on lines 5—5 and 6—6, Fig. 4.

Referring to said drawings, in which like designating characters distinguish like parts throughout the several views, 1 indicates a main receptacle or can body, and 2 a removable cover therefor. Said cover is preferably interlocked with said can body by means of interengaging looped-wire handles 3 and 4 which are pivotally mounted on said cover and body respectively.

Rigidly mounted, as by soldering, in the top of the cover 2 is a casing 5 which is preferably of rectangular form in horizontal section. Said casing is open at its top and bottom and is so mounted that a portion thereof protrudes above said cover 2. Hinged to one side of the top of said casing is a sheet metal cover or closure 6 for the upper end of the casing 5. Said closure is convexly curved in cross section, as shown in Fig. 2, and has rigidly secured, as by soldering, to its upper face a pair of transversely disposed bars or wires 7 having hook-like terminals 8 and 9 at their opposite ends. Attached, as by bolts or rivets 10, to each of the opposite ends of the casing 5, and occupying a position in a substantially rectangular opening 13 in the cover 2 is a circular plate 11 having an outwardly directed pintle or trunnion 12 upon which is pivotally mounted the normally upright portion of an angular side member 14^a of a lever 14 which is of substantially U-shape. Rotatably mounted on the outer end of each trunnion 12 and fitting closely against the face of the plate 11 is a circular plate 15 having a groove or channel 22 provided in its inner face in which the lever member 14^a is received. The plates 11 and 15 together wholly occupy the opening 13; hence, as will be apparent, forward and rearward movement of the lever 14 is accomplished without at any time presenting a passage through which odors may escape from the can, the plate 15 being rotated with rocking movement of said lever.

The lower ends of the side members 14^a are inturned, as is clearly shown in Fig. 3, and have rigidly mounted thereon a plate 16, arcuate in transverse section, which serves as a closure for the lower end of the casing 5, said closure being adapted to be moved to and from closing position with rocking movement of said lever.

Having its opposite ends mounted at a suitable point in the opposite lever members 14^a is a horizontally disposed rod 17 which, in the rocking movement of the lever, rides closely over the wires 7 of the top closure 6. At the limit of the forward movement of said lever, said rod 17 engages the hooks 8, thus firmly maintaining the top closure seated. Rearward rocking movement of the lever from its foremost position is accomplished without altering the position of top closure 6 until the hooks 9 of the wires 7 are engaged by the rod 17, whereupon, due to

the close proximity of said hooks to the hinged edge of said closure, the latter is instantly swung to the open position illustrated in Figs. 1, 2 and 3.

The lever 14 has its side members 14ª bent or curved so that, when the rod 17 carried thereby lies in engagement with hooks 9, elevating the top closure 6, the bottom closure 16 occupies a position closing the lower end of the casing 5, as shown in full lines in Fig. 2. Further, as shown in dotted lines in said figure, when the lever occupies a position at the limit of its forward movement, maintaining the top closure seated, the bottom closure 16 is held in a rearwardly swung position, leaving the lower end of the casing open.

It will be noted from the foregoing that the bottom or lower end of the casing is at all times closed prior to the raising of the top closure; and, further, that the top closure is at all times seated prior to the withdrawal of the bottom closure from closing position, it being apparent that said top closure is caused to seat instantly by an extremely slight forward movement of the lever from its rearmost position. Thus, as is obvious, in depositing material, the contents of the main receptacle are at no time exposed and the possibility of the escape of odors from, and the admission of flies to, the main receptacle is reduced to a minimum.

The maintenance of the device in a sanitary condition may be further facilitated by the employment of an inner removable paraffin-coated paper container 18 of a size which is conveniently received within main receptacle or can body 1. Such container 18 may be secured in any appropriate manner as by a spring-wire ring 19 adapted to force the material of said container, adjacent to the upper edge of the latter, into a receiving groove 20 provided in the body 1 by the formation of an outwardly directed annular bead 21 on said body.

What is claimed is—

1. In a garbage receptacle, the combination with a main receptacle, of a cover therefor, a casing supported by said cover, said casing having open upper and lower ends, closures for said ends, and a pivoted lever for operating said closures to and from closing positions, said lever maintaining the bottom closure in closing position when the top closure is withdrawn, and vice versa.

2. In a garbage receptacle, the combination with a main receptacle, of a cover therefor, a casing supported by said cover, said casing having open upper and lower ends, closures for said ends, and a pivoted lever associated with said closures whereby movement of the latter is accomplished, said top closure being opened after the bottom closure has been closed and being closed before the bottom closure begins to open.

3. In a garbage receptacle, the combination with a main receptacle, of a cover therefor, a casing supported by said cover, said casing having open upper and lower ends, closures for said ends, and means interposed between said closures which permits of opening of but one at a time, said means comprising a pivoted lever.

4. In a garbage receptacle, the combination with a main receptacle, of a cover therefor, a casing supported by said cover, said casing having open upper and lower ends, closures for said ends, and a pivoted lever associated with said closures whereby the latter may be moved to and from closing position, said lever maintaining the top closure against opening movement until the bottom closure occupies closing position.

5. In a garbage receptacle, the combination with a main receptacle, of a cover therefor, a casing supported by said cover, a hinged closure for the upper end of said casing, a lever pivotally mounted on said casing and having a portion extending into said receptacle, a closure for the bottom end of said casing carried by said lever, the last mentioned closure being movable to and from closing position with rocking movement of said lever, and means adapted to be engaged by said lever for opening said hinged closure only when said lever assumes a position causing the lower closure to occupy closing position.

6. In a garbage receptacle, the combination with a main receptacle, of a cover therefor, a casing supported by said cover, a hinged closure for the upper end of said casing, a lever pivotally mounted on said casing and having a portion extending into said receptacle, a closure for the bottom end of said casing carried by said lever, the last mentioned closure being movable to and from closing position with rocking movement of said lever, and coöperating parts carried by said lever and said top closure whereby the latter is elevated to open position only when the bottom closure has assumed closing position.

7. In a garbage receptacle, the combination with a main receptacle, of a cover therefor, a casing supported by said cover, a hinged closure for the upper end of said casing, a lever pivotally mounted on said casing and having a portion extending into said receptacle, a closure for the bottom end of said casing carried by said lever, the last mentioned closure being movable to and from closing position with rocking movement of said lever, and coöperating parts carried by said lever and said top closure whereby the latter is maintained closed except when the former occupies a position holding the bottom closure in closing position.

8. In a garbage receptacle, the combination with a main receptacle, of a cover there-

for, a casing supported by said cover, a hinged closure for the upper end of said casing, said cover having an opening therethrough adjacent to said casing, a lever pivotally mounted on said casing and having a portion extending through said opening into said receptacle, a closure for the bottom end of said casing carried by said lever, the last mentioned closure being movable to and from closing position with rocking movement of said lever, coöperating parts carried by said lever and said top closure whereby the latter is maintained closed except when the bottom closure occupies closing position, and means associated with said lever whereby said opening is permanently closed.

9. In a garbage receptacle, the combination with a main receptacle, of a cover therefor, a casing supported by said cover, a hinged closure for the upper end of said casing, said cover having an opening therethrough adjacent to said casing, a lever pivotally mounted on said casing and having a portion extending through said opening into said receptacle, a closure for the bottom end of said casing carried by said lever, the last mentioned closure being movable to and from closing position with rocking movement of said lever, coöperating parts carried by said lever and said top closure whereby the latter is maintained closed except when the bottom closure occupies closing position, and a circular plate fitted in said opening in embracing relation to said lever and adapted to rock with the latter, whereby said opening is permanently maintained closed.

In testimony whereof we affix our signatures in presence of two witnesses.

JOHN H. BLANK.
CLARK S. DUNGAN.

Witnesses:
H. E. DUNLAP,
W. F. KEEFER.