Dec. 12, 1967 C. L. FISHER 3,357,194

LINER PLATE

Filed May 27, 1965 2 Sheets-Sheet 1

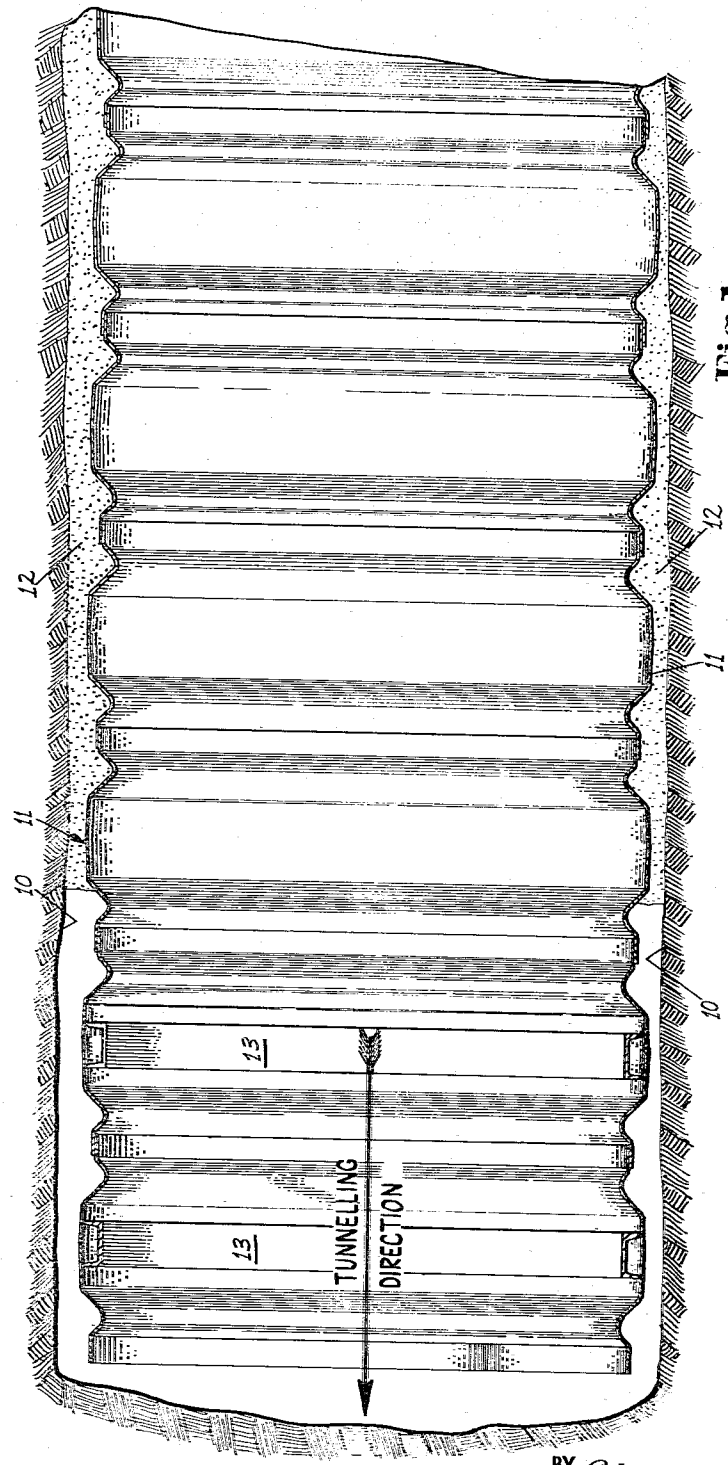

Fig. 1

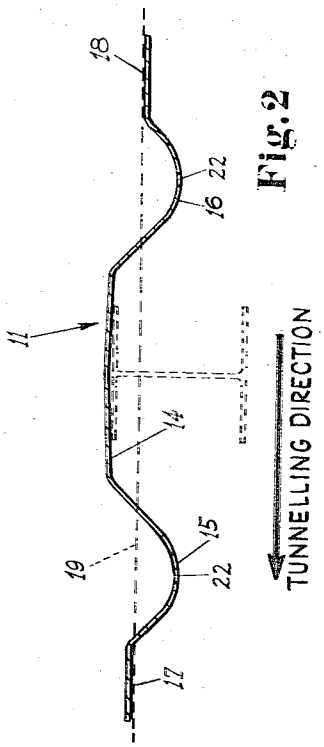

Fig. 2

INVENTOR

CHRISTOPHER L. FISHER,

BY Yungblut, Melville, Strasser and Foster

ATTORNEYS

Dec. 12, 1967 C. L. FISHER 3,357,194

LINER PLATE

Filed May 27, 1965 2 Sheets-Sheet 2

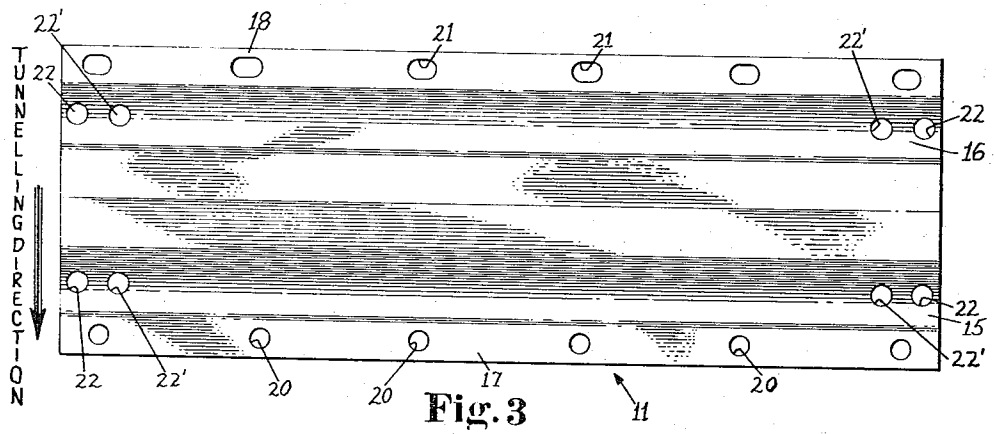

Fig. 3

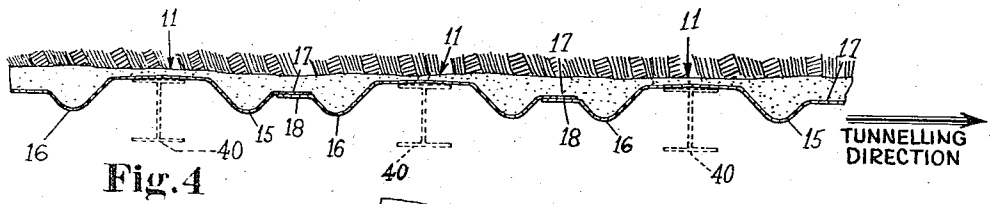

Fig. 4

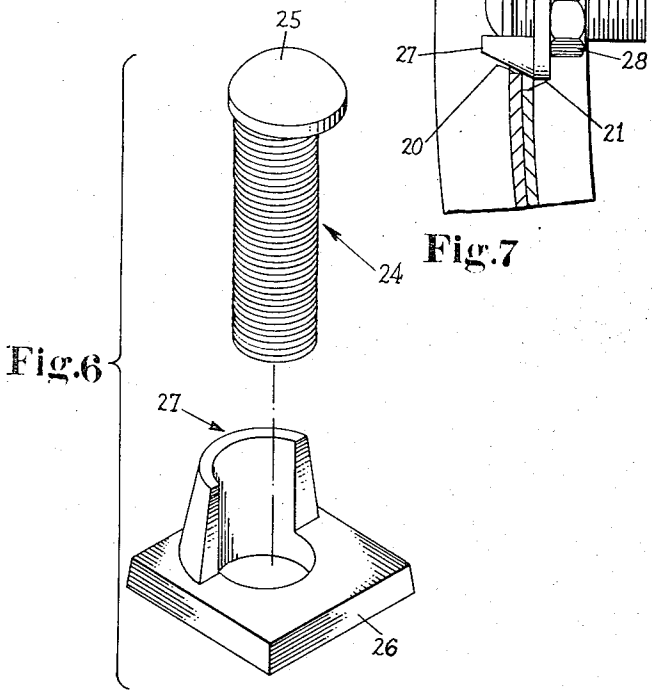

Fig. 6

Fig. 7

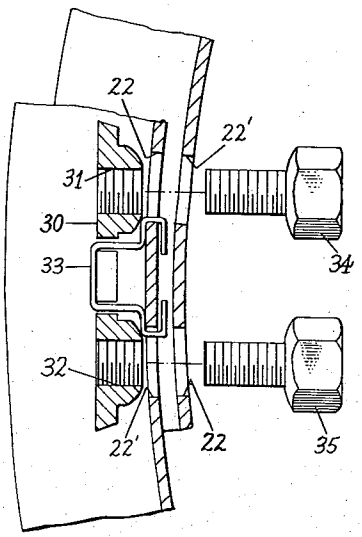

Fig. 5

INVENTOR

CHRISTOPHER L. FISHER,

BY Yungblut, Melville, Strasser and Foster
ATTORNEYS

United States Patent Office 3,357,194
Patented Dec. 12, 1967

3,357,194

LINER PLATE

Christopher L. Fisher, Winnipeg, Manitoba, Canada, assignor to Armco Steel Corporation, Middletown, Ohio, a corporation of Ohio

Filed May 27, 1965, Ser. No. 459,306
6 Claims. (Cl. 61—45)

ABSTRACT OF THE DISCLOSURE

Prefabricated ring and lagging liner plate for lining tunnels, caissons, and the like.

In constructing tunnels, arches or the like, a suitable opening is excavated and as excavation proceeds, the interior must provide support in order to prevent cave-ins, and carry the weight bearing on the tunnel. The most common practice of supporting a tunnel is called in the art the "ring and lagging" method, in which a plurality of structural supports (known as rings) are placed at certain intervals with lagging or covering material spanning the spaces therebetween. The rings may be wooden beams or, in more recent constructions, steel structural members. The lagging can then be any suitable material such as wood, light steel plates, or the like.

Inasmuch as all the above elements must be positioned and secured in place from the inside of the tunnel, the art has developed various types of tunnel liner plate having either two or four inwardly extending flanges provided with bolt holes. In both types of liner plate, the flanges are formed along the longitudinal edges of the sheet so that when a plurality of liner plates are secured together to form a ring, the flanges will form a circumferential seam. In such a construction, the flange serves as the "ring," while the other portion of the liner plate serves as what might be called the "lagging."

Tunnel liner plates of this construction are in many cases unsatisfactory because the flanges make it impossible to compactly store or transport the plates. It has also been found in actual practice that such plates can often be difficult to install both because of difficulties in aligning bolt holes in the flanges and because of the problem of dirt or other material getting caught between adjacent flanges.

From the manufacturer's standpoint, it is desirable to provide as much strength as possible with as little steel as possible, for obvious reasons. In the prior art liner plates noted above, the formation of the flanges causes certain manufacturing problems as well as increasing the quantity of material necessary to cover a given area.

Accordingly, it is an object of this invention to provide an improved liner plate which requires less weight of material in relation to strength to cover a given area, and hence is cheaper to both manufacture and sell.

A further object of the invention is the provision of a tunnel liner plate which is easier to produce from the standpoint of manufacturing operations involved.

Still a further object of the invention is to provide a tunnel liner plate which is more easily installed by a workman from within.

And still another object of the invention is the provision of a tunnel liner plate which is in fact stronger for a given amount of material than any liner plate heretofore available.

The study of soil-structure interaction which indicates that the weight of material carried by the tunnel can be borne by the composite action between the tunnel liner and the soil surrounding it, has permitted use of much thinner, lighter material than was previously thought possible. However, this composite action is not available during the construction of a tunnel when the liner is surrounded by an irregular void space. In a typical construction, these voids are eventually filled by the process known as grouting, in which a hardenable slurry is pumped through the wall of the tunnel liner to fill the space thereabout. But, before this grouting operation takes place, the advantage of the composite action of the soil-structure interaction is not available and in some cases it may be necessary to provide additional support until the grouting operation is completed.

It is, therefore, still another object of the invention to provide a tunnel liner plate which permits the easy installation of additional supports if needed. The additional supports used in conjunction with the tunnel liner plate of this invention are readily removable after the grouting operation has been completed if this is desirable.

It is still another object of the invention to provide a more flexible tunnel lining system. That is, one in which a contractor can choose between various sizes (thicknesses) of material with various structural supporting members to meet his particular needs. This also means that if greater forces are encountered than preliminary calculations predicted, it is possible for the contractor to provide additional support for the structure already in place.

Various other objects and advantages of this invention will become apparent to the skilled worker in the art as this specification proceeds. Reference will be made from time to time to the accompanying drawings in which:

FIG. 1 shows a longitudinal cross section through a tunnel constructed in accordance with the instant invention.

FIG. 2 is a transverse cross sectional view through a single liner plate according to this invention.

FIG. 3 is a plan view of a liner plate according to this invention.

FIG. 4 is a transverse cross sectional view on an enlarged scale showing several plates according to this invention as joined and a portion of the tunnel wall.

FIG. 5 is an exploded view with parts in section showing one way of securing the horizontal seam together.

FIG. 6 is a perspective view of the hook-bolt and wedge-washer for inside fastening of the circumferential seam.

FIG. 7 is a cross sectional view showing the use of the above elements to form a circumferential seam.

Ring and lagging thinking generated the idea that concentrating all bolts (horizontal and circumferential) near the circumferential seams would give a stronger ring effect when the plates were assembled. A flat section with or without bolts between these circumferential seams could be considered the lagging or covering portion.

Briefly considered, therefore, the present invention contemplates a tunnel liner plate which is generally rectangular in plan view and arcuately curved along its longitudinal axis. In transverse cross section, the liner plate of this invention includes a generally flat portion, while the longitudinal edges, as will be described hereinafter, are designed to concentrate the bolts in a circumferential seam, and without using inwardly extending flanges.

Referring now in more detail to the drawings, FIG. 1 shows a tunnel in the process of being constructed. The direction of tunneling is indicated by the arrow. The walls of the tunnel have been indicated at **10** and the liner plate of this invention installed inside have been generally indicated at **11**. As will be seen in the right-hand portion of the figure, the space **12** between the exterior surface of the liner plate **11** and the tunnel wall **10** has been filled with grout so that the full advantages of soil-structure interaction may be realized. In the left-hand portion of this figure, the grouting has not yet been performed and, accordingly, an additional tem-

porary structural support shown generally at **13** has been utilized. As generally indicated above, these additional supports may be removed after the grouting has been completed if it is felt that such additional support is not necessary.

Turning now to FIG. 2, the transverse cross section of the liner plate **11** will be described in more detail. As will be apparent from examining the drawing, the plate includes a substantially flat central portion **14** with the corrugations **15** and **16** located on each side of it. It will be noted that the portion **14** has a very slight crown. This is simply to facilitate forming the arcuate curve of the plate and performs no structural function. The outer free edges of the corrugations **15** and **16** terminate, respectively, in the fastening flanges **17** and **18**.

The transverse cross section will be so designed that the liner plate will have a neutral axis indicated by the line **19**. It will be observed that the flat central portion **14** is spaced on one side of the neutral axis, that the neutral axis passes through both the corrugations **15** and **16**, and that the flange **18** is spaced inside the neutral axis while the flange **17** is spaced outside the neutral axis. As will become apparent hereinafter, the spacing of these flanges with respect to the neutral axis is a very important facet of this invention. Throughout the remainder of this specification, the word "inside" or "outside" will be used to refer to the inside and outside of the liner as it is placed in position in the tunnel. Similarly, the phrase "leading edge flange" or "trailing edge flange" will be used with reference to the tunneling direction. The tunneling direction has been indicated by the arrow in this figure and it will be seen that the leading edge flange **17** is disposed outside the neutral axis, while the trailing edge flange **18** is disposed inside the neutral axis.

FIG. 3 shows the liner plate of this invention in plan view. It will be noted that the leading edge flange **17** is provided with a plurality of substantially round holes **20** while the trailing edge flange **18** is provided with a plurality of elongated or slotted holes **21**. When a plurality of plates are placed in overlapping edge to edge relationship, the holes along the leading and trailing edges will form a circumferential seam.

Still referring to FIG. 3, it will be seen that each of the corrugations **15** and **16** includes a pair of longitudinally aligned bolt holes **22–22'** near each transverse edge. By referring briefly back to FIG. 2, it will be seen that the holes **22–22'** are located in that portion of the corrugation **15** or **16** which is disposed inside the neutral axis of the cross section of the plate. The joint effected by the holes **22–22'** in effect form the horizontal seam of the tunnel liner, but it will be observed that these bolts are in effect concentrated closely adjacent those bolts which form the circumferential seam. As indicated earlier, this concentration of bolts in the circumferential seam provides a stronger ring effect when the plates are assembled.

Referring at this time to FIGS. 6 and 7, one method of effecting the circumferential seam will be described. As explained earlier, it is necessary that the fastenings be applied from the inside of the liner structure. To this end, it has been found desirable to utilize the bolt **24** having the off center head **25** at its upper end, and the wedge-washer having the base portion **26** and the upstanding portion **27**. The inner surface of the portion **27** is cylindrical and substantially perpendicular to the base **26**, while the outer portion of the wedge **27** is sloped as shown in the figure. Referring to FIG. 7, it will be seen that the bolt, wedge-washer assembly is placed through a pair of aligned openings **21, 20**. When the nut **28** is tightened, it will force the wedge-washer into the holes, which in turn will force the head **25** of the bolt into engagement with the fastening flange.

In FIG. 5, one method of effecting the horizontal seam has been shown. This includes the double nut bar **30** with the threaded openings **31** and **32** and the spring clip **33**. The spring clip **33** may be engaged in a pair of openings **22–22'** to hold the double nut bar **30** against the outside of the plate with the openings **31** and **32** aligned, respectively, with the bolt holes **22–22'**. When the next adjacent plate is in proper position, the bolts **34** and **35** may be passed through the aligned holes and into the openings **31** and **32**, respectively, to effect the horizontal seam.

FIG. 4 shows in transverse cross section how a plurality of liner plates **11** will be joined together. In view of the relative disposition of the fastening flanges **17** and **18**, it will be seen that the successive tunnel liner rings nest within each other. That is, a "stove pipe" construction is obtained. This has been found in practice to be a great improvement in tunnel liner construction inasmuch as it insures axial alignment of the liner plates, and makes it easier for the workman to align and install the individual plates. That is, only a rotational correction is necessary to align the bolt holes.

It will also be recalled that the leading edge flanges **17** is provided with substantially round bolt holes, while the trailing edge flange is provided with the elongated bolt holes. There are several reasons for this construction. In the first place, this insures a firm grip for the head **25** of the bolt in the round hole **20** which will always be outermost. Secondly, it will be recognized that the endmost holes **20** will be joined when two liner plates are placed in end to end relation. The use of round rather than slotted holes will insure the maintaining of an accurate circumferential dimension at the leading edge of the tunnel liner.

As indicated earlier in this specification, the concentration of bolts and fastening flanges along the circumferential seam can in effect be considered a ring, while the portion of the liner plates (the flat surface **14**) can be considered as lagging or covering. It has also been discovered that this central, flat portion **14** is very useful as a base for additional supporting members. By way of example, such additional supporting members can be in the form of channels, I-beams, or H-beams if necessary. These beams would be formed into ring-like structural members which can be removably set up within the tunnel liner. A number of such structural members are shown in FIGURE 4 at **40**. (In FIGURE 1, a slightly different cross sectional structural member was earlier indicated at **13**.)

The presence of the corrugations **15** and **16** on opposite sides of the central portion **14** serve to keep the structural member **40** from tipping or moving to either side. As indicated before, the structural members can be easily set in place when additional strength is required and just as easily removed completely or placed in another location at a later time. The structural members are also favorably located to take up a minimum of space inside the tunnel.

In some cases, the liner plate of this invention may be made in a "reversed" configuration so that the structural members can be located outside the liner plates. That is, in the embodiment described thus far, the flat central portion **14** of the liner plate is disposed outside the neutral axis of the plate. In the "reversed" configuration, the central portion will be disposed inside the neutral axis of the plate (the corrugations will of course also be reversed).

It is believed that the foregoing constitutes a full and complete disclosure of the instant invention. While it has been described in terms of an exemplary embodiment, no limitations are to be inferred except as set forth in the claims that follow.

The embodiments of the invention in which an exclusive property or privilege is claimed are defined as follows:

1. A prefabricated ring and lagging liner plate comprising a generally rectangular sheet of material arcuately curved along its longitudinal axis, said sheet in transverse cross section having a substantially flat central portion, of

substantial width, a corrugation on each side of said central portion, each said corrugation being substantially narrower than said flat central portion, and a fastening flange on the outer edge of each said corrugation, said fastening flanges having different radii of curvature and being substantially parallel to said flat central portion, said sheet in transverse cross section also having a neutral axis passing through said corrugations.

2. The liner plate claimed in claim 1 wherein said central portion is spaced outside said neutral axis, and wherein one of said fastening flanges is disposed on one side of said neutral axis and the other of said flanges is disposed on the opposite side of said neutral axis.

3. The liner plate claimed in claim 1 wherein said central portion is crowned.

4. The liner plate claimed in claim 1 including a plurality of substantially circular bolt holes along the fastening flange of said sheet having the longer radius of curvature and a plurality of elongated bolt holes along the other fastening flange of said sheet.

5. The liner plate claimed in claim 1 including bolt holes along the transverse edges of said sheet, all said bolt holes being located in a portion of said corrugations disposed inside said neutral axis.

6. The liner plate claimed in claim 1 wherein the portion of each said corrugation which is disposed inside said neutral axis includes at least a pair of longitudinally aligned bolt holes near each transverse edge.

References Cited

UNITED STATES PATENTS

971,558	10/1910	Porter	138—173 X
977,944	12/1910	Feldt	138—173 X
2,148,783	2/1939	Spaulding	61—45
2,217,292	10/1940	Proctor	61—45
2,536,758	1/1951	Macleod	138—173 X
2,841,297	7/1958	Washabaugh	61—45 X

DAVID J. WILLIAMOWSKY, *Primary Examiner.*

DONALD L. TAYLOR, *Assistant Examiner.*