US 20060103549A1

(19) United States

(12) Patent Application Publication (10) Pub. No.: US 2006/0103549 A1

Hunt et al. (43) Pub. Date: May 18, 2006

(54) USER-INSTALLABLE POWER CONSUMPTION MONITORING SYSTEM

(75) Inventors: **Hunter L. Hunt**, Dallas, TX (US); **Daniel G. Price**, Dallas, TX (US); **Hugh D. Baker JR.**, Dallas, TX (US); **David A. White**, Dallas, TX (US)

Correspondence Address:
PATTON BOGGS, L.L.P.
2001 ROSS AVENUE, SUITE 3000
DALLAS, TX 75201 (US)

(73) Assignee: **Hunt Power, L.P.**, Dallas, TX (US)

(21) Appl. No.: **11/311,779**

(22) Filed: **Dec. 19, 2005**

Related U.S. Application Data

(62) Division of application No. 10/123,504, filed on Apr. 15, 2002.

Publication Classification

(51) **Int. Cl.**
G08C 15/06 (2006.01)
G08B 23/00 (2006.01)

(52) **U.S. Cl.** **340/870.02**

(57) **ABSTRACT**

A system and method for remotely monitoring power usage from a watt-hour meter or power meter. The system may include a sensor, sensor terminal, and data collection unit. The sensor may be disposed external from the power meter and be consumer installable in an unobstructive position for direct viewing of power meter registers. The sensor terminal may be coupled to the sensor and include a receiver and transmitter operable to receive and transmit information indicative of motion of a rotating disk in the power meter sensed by the sensor. A data collection unit in communication with the sensor terminal may include a display to display various information to the consumer, such as current bill and power network notification indicators. The data collection unit further may be communicate with a service center that performs power usage analysis to feedback to the data collection unit to display for the consumer.

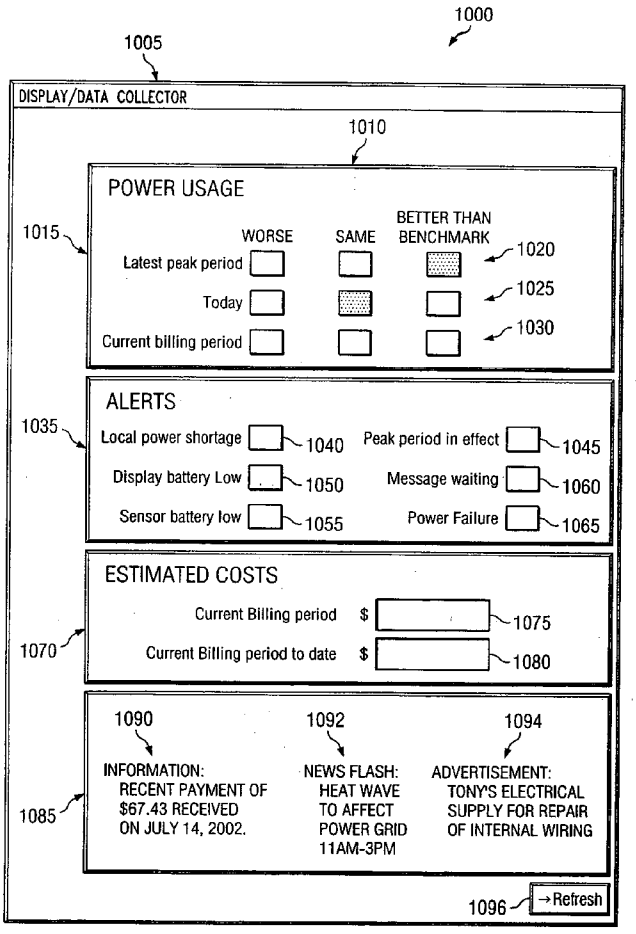

FIG. 1

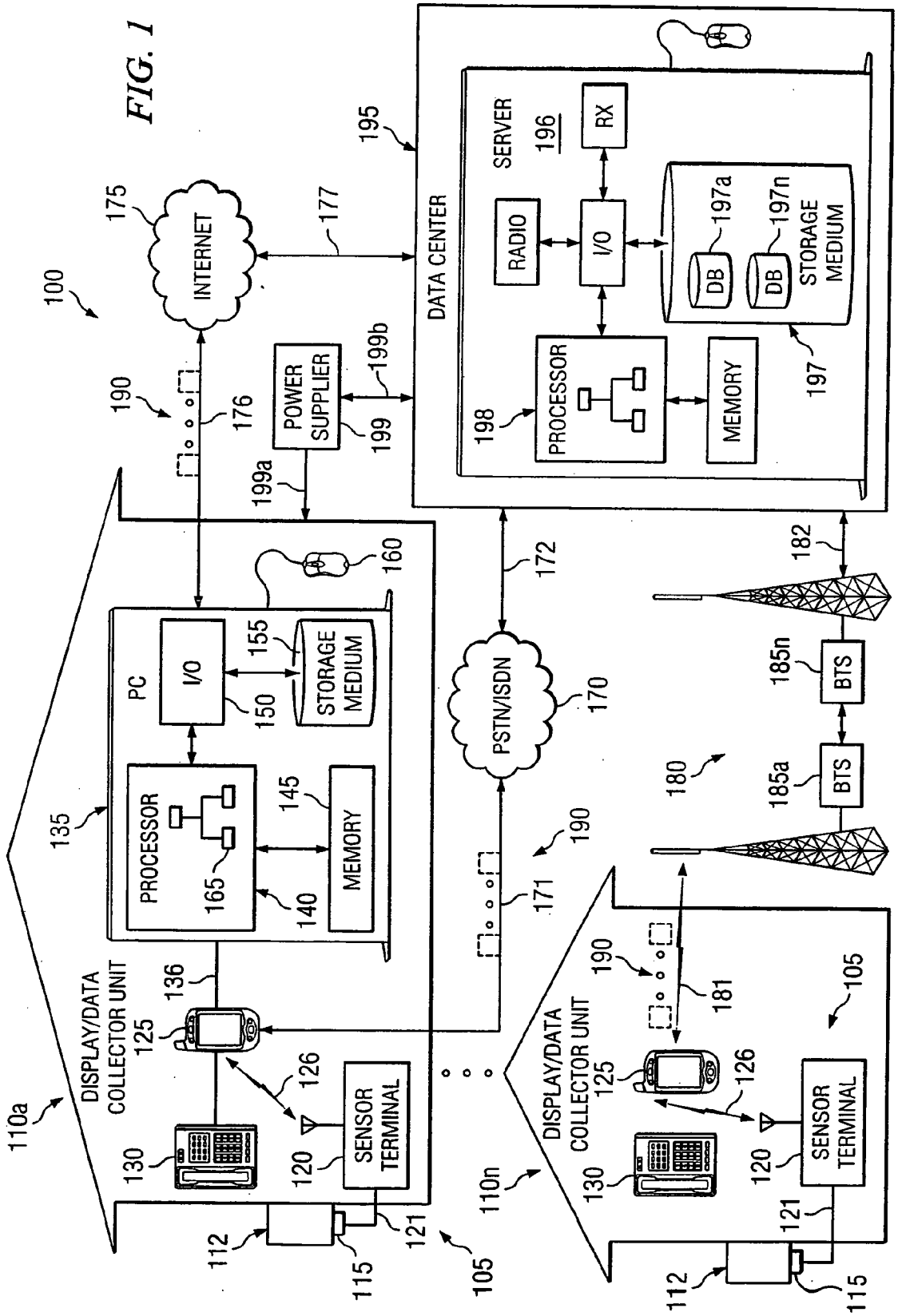
100
INTERNET
175
177
195
DATA CENTER
SERVER
196
RX
RADIO
I/O
197a
197n
DB
DB
STORAGE MEDIUM
197
198
PROCESSOR
MEMORY
190
176
POWER SUPPLIER
199
199b
199a
160
172
182
PC
I/O
155
150
STORAGE MEDIUM
PSTN/ISDN
170
185n
BTS
185a
BTS
180
135
PROCESSOR
165
145
140
MEMORY
190
171
181
105
DISPLAY/DATA COLLECTOR UNIT
125
136
126
SENSOR TERMINAL
120
130
110a
110n
112
115
121
105

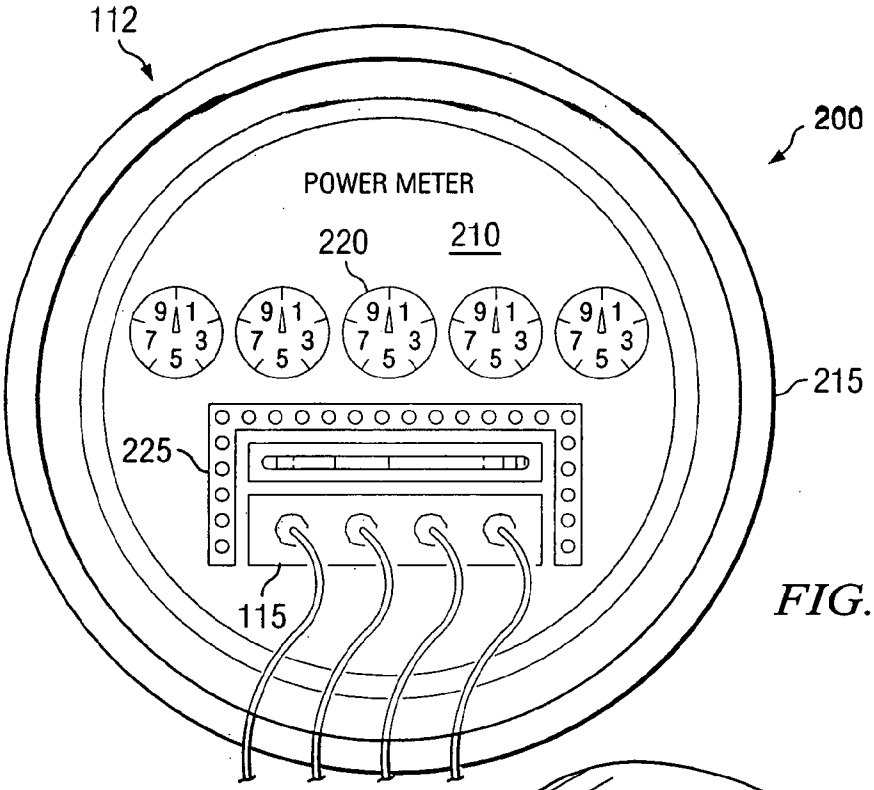
112
200
POWER METER
220
210
215
225
115

FIG. 2A

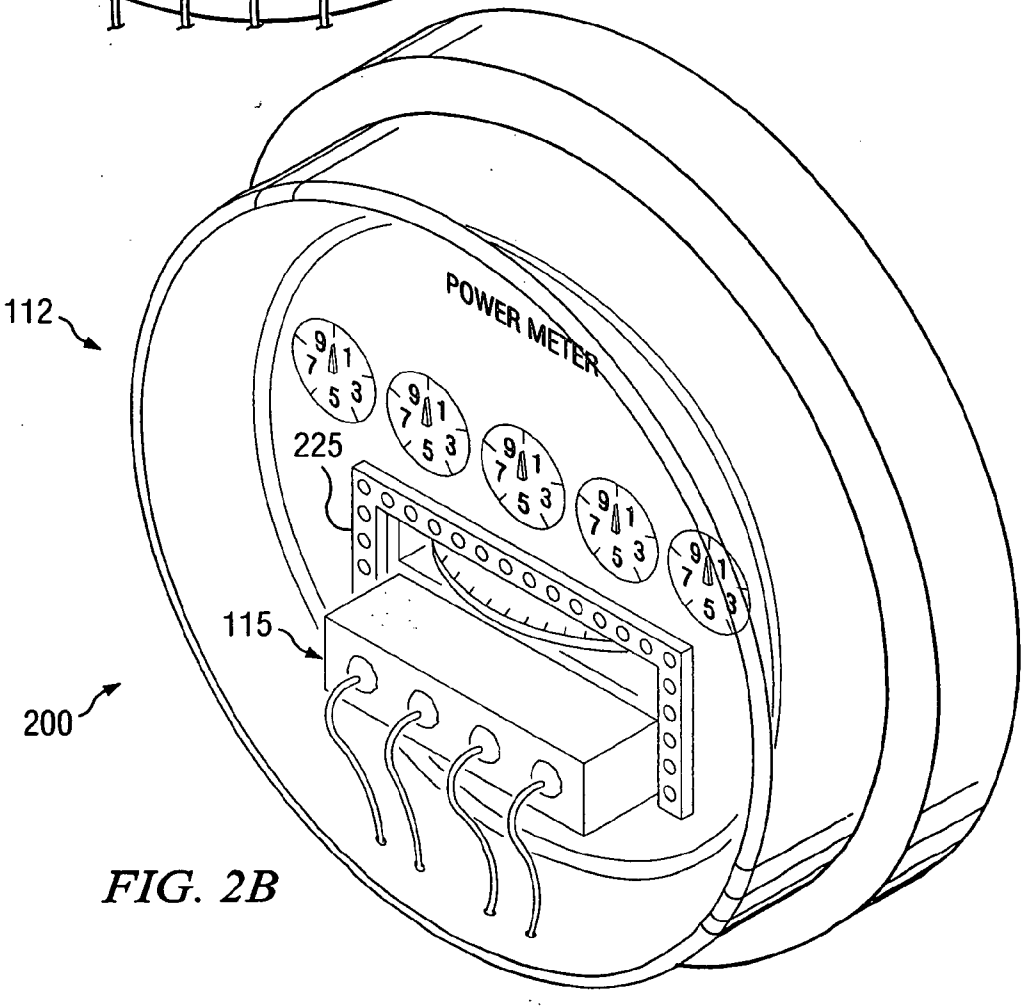
112
POWER METER
225
115
200

FIG. 2B

FIG. 2D

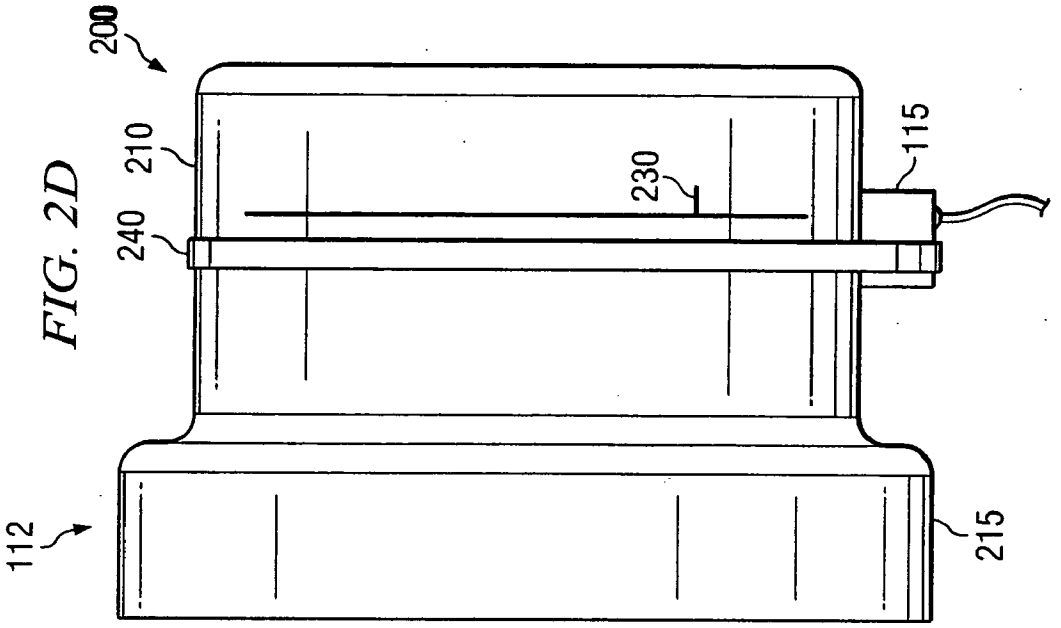
200
210
240
230
115
112
215

FIG. 2C

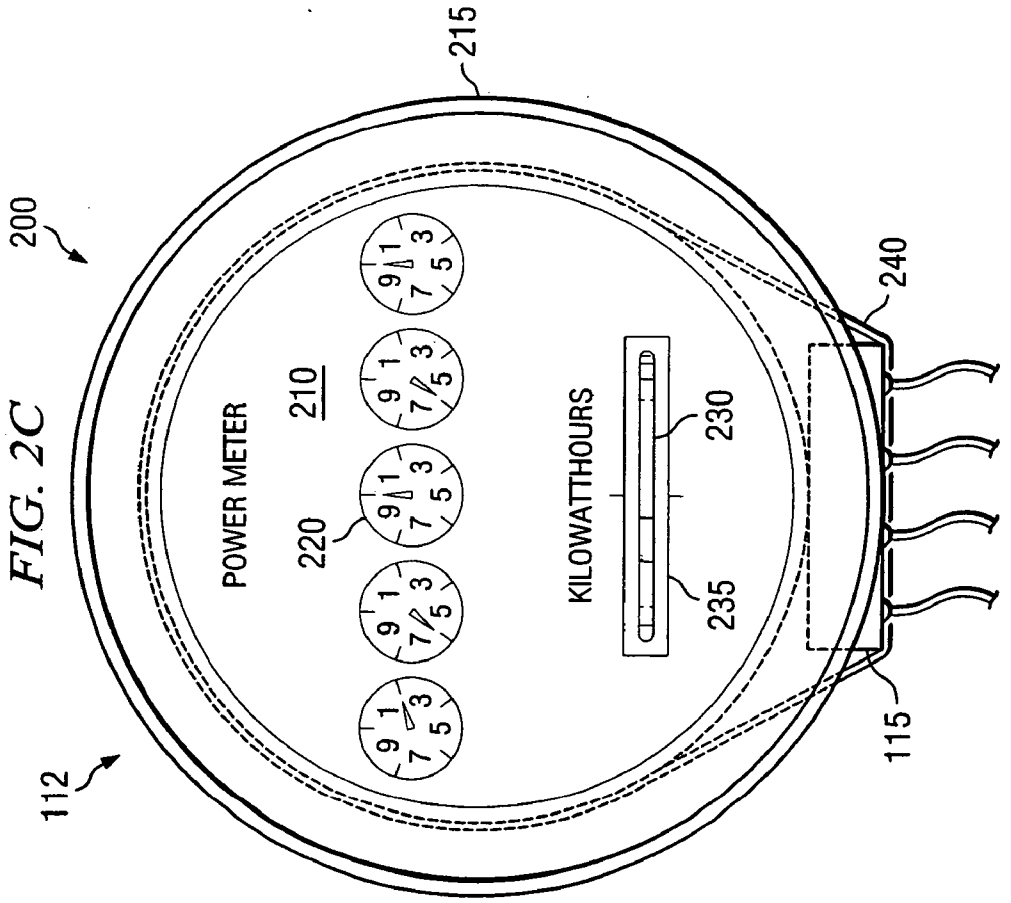
215
200
240
POWER METER
210
220
KILOWATTHOURS
230
235
115
112

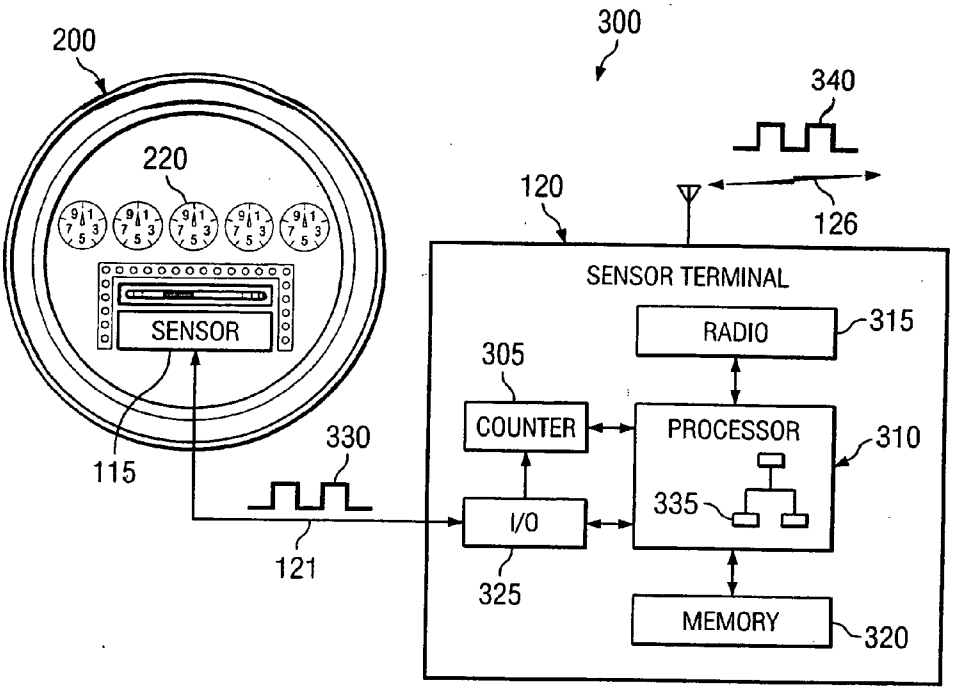
200
300
340
220
120
126
SENSOR TERMINAL
RADIO
315
305
COUNTER
PROCESSOR
310
330
335
I/O
115
121
325
MEMORY
320

FIG. 3

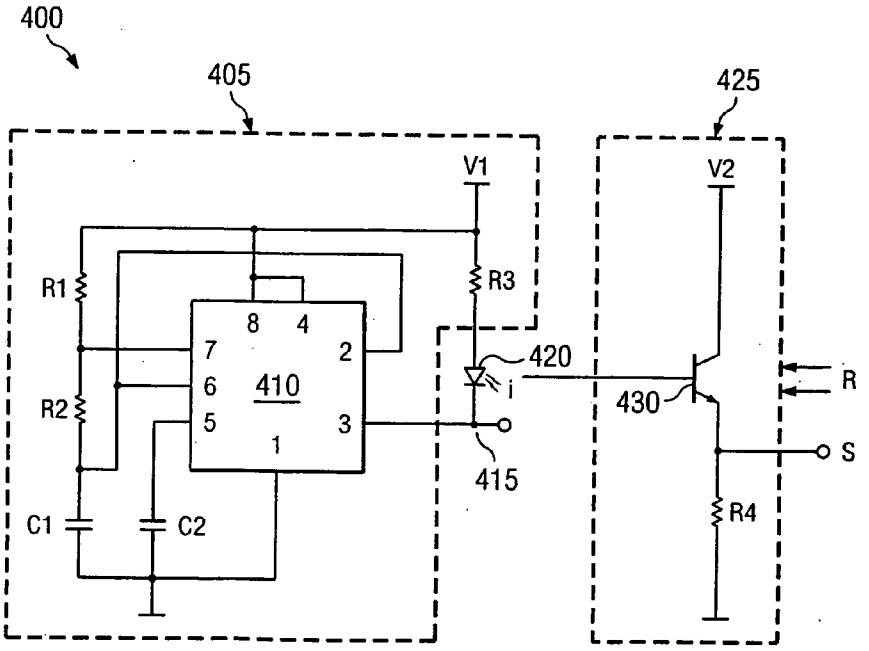
400
405
425
V1
V2
R1
R3
8
4
7
2
420
6
410
i
R2
5
3
430
R
1
S
415
C1
C2
R4

FIG. 4A

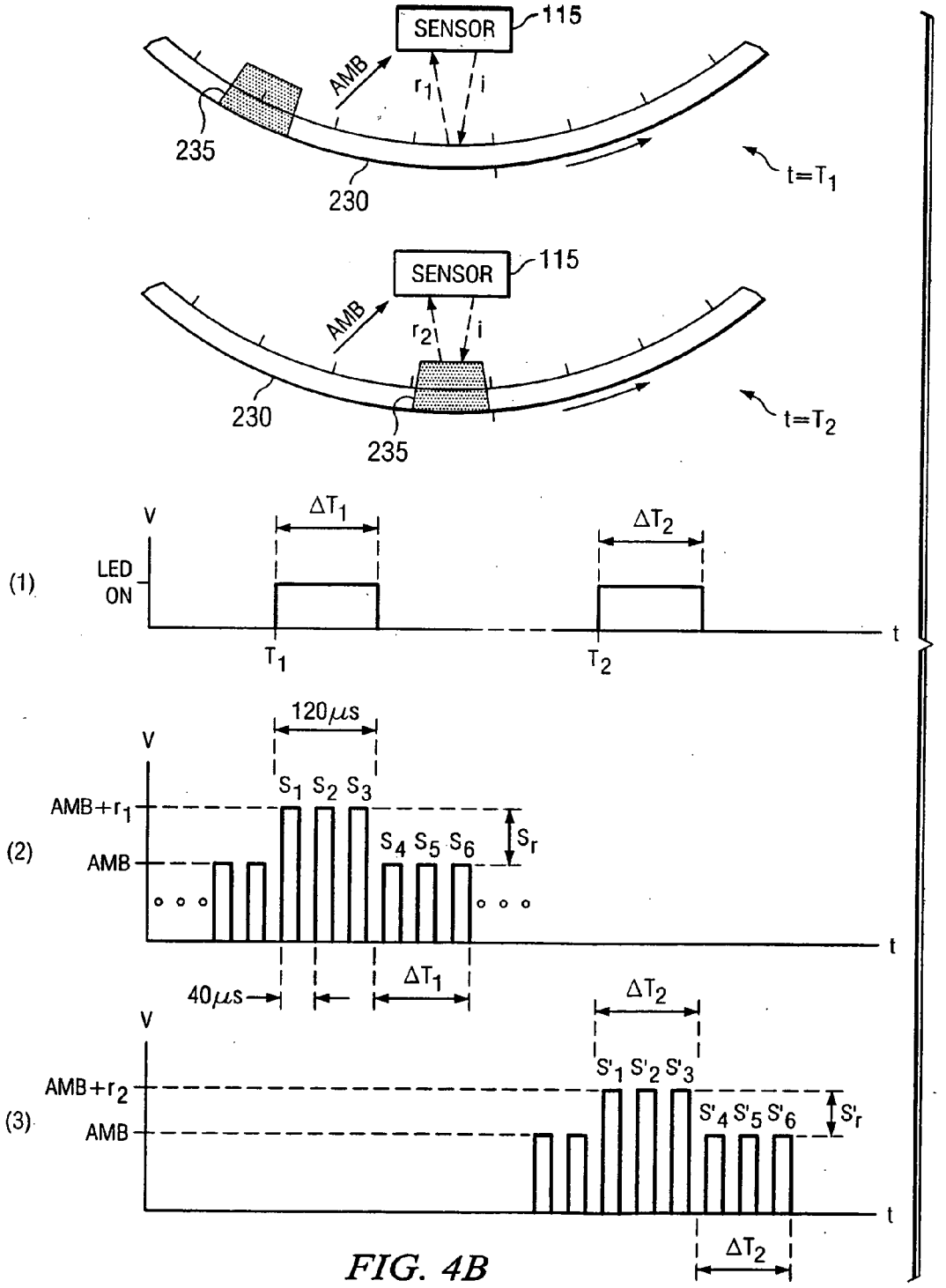
SENSOR
115
AMB
r_1
i
235
230
t=T_1
SENSOR
115
AMB
r_2
i
230
235
t=T_2
(1)
V
LED ON
ΔT_1
ΔT_2
T_1
T_2
t
(2)
V
120μs
S_1 S_2 S_3
AMB+r_1
S_4 S_5 S_6
S_r
AMB
40μs
ΔT_1
t
(3)
V
ΔT_2
S'_1 S'_2 S'_3
AMB+r_2
S'_4 S'_5 S'_6
S'_r
AMB
t
ΔT_2

FIG. 4B

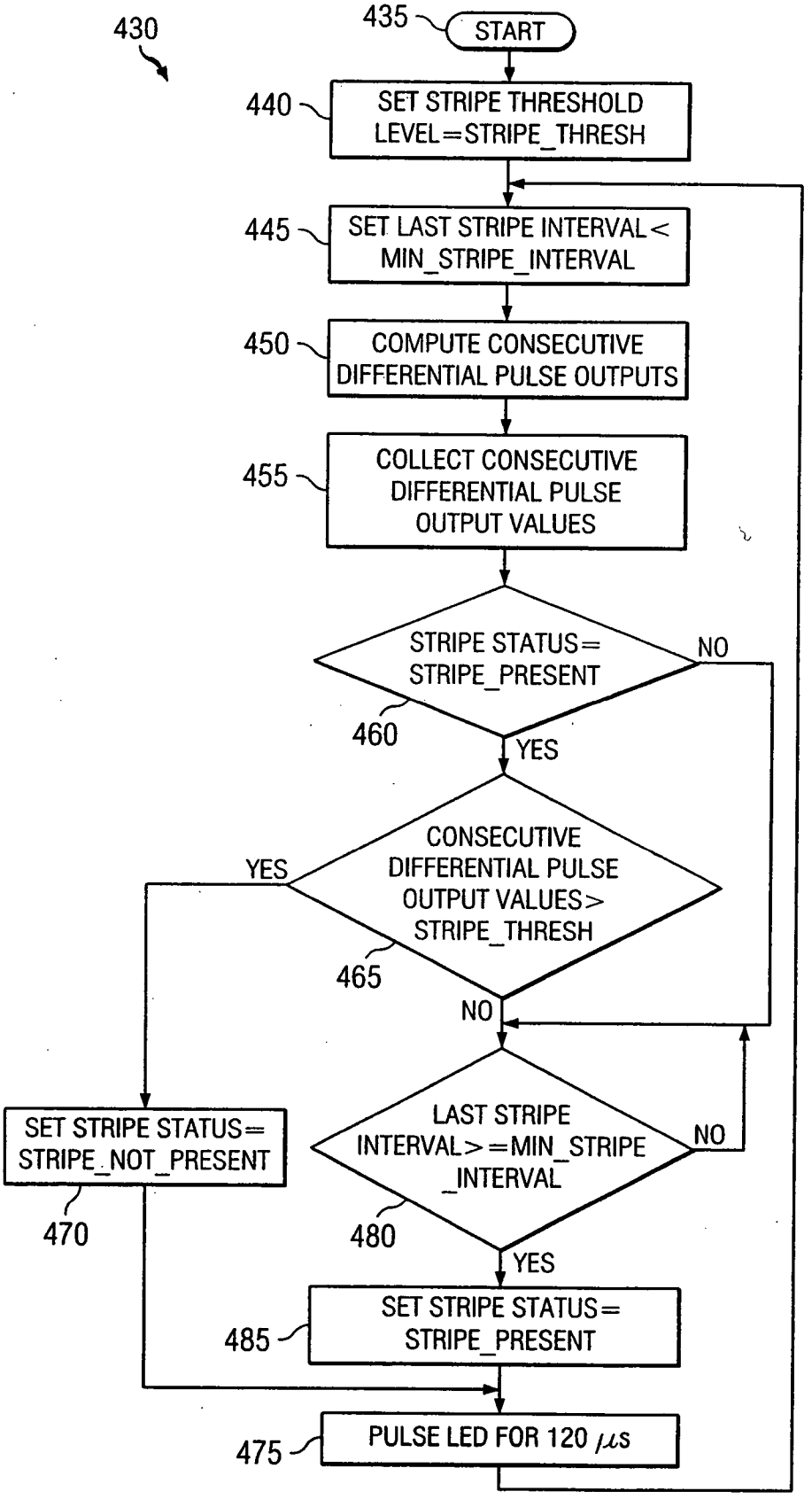
430
435
START
440
SET STRIPE THRESHOLD LEVEL=STRIPE_THRESH
445
SET LAST STRIPE INTERVAL< MIN_STRIPE_INTERVAL
450
COMPUTE CONSECUTIVE DIFFERENTIAL PULSE OUTPUTS
455
COLLECT CONSECUTIVE DIFFERENTIAL PULSE OUTPUT VALUES
STRIPE STATUS= STRIPE_PRESENT
NO
460
YES
CONSECUTIVE DIFFERENTIAL PULSE OUTPUT VALUES> STRIPE_THRESH
YES
465
NO
SET STRIPE STATUS= STRIPE_NOT_PRESENT
470
LAST STRIPE INTERVAL>=MIN_STRIPE _INTERVAL
NO
480
YES
485
SET STRIPE STATUS= STRIPE_PRESENT
475
PULSE LED FOR 120 μs

FIG. 4C

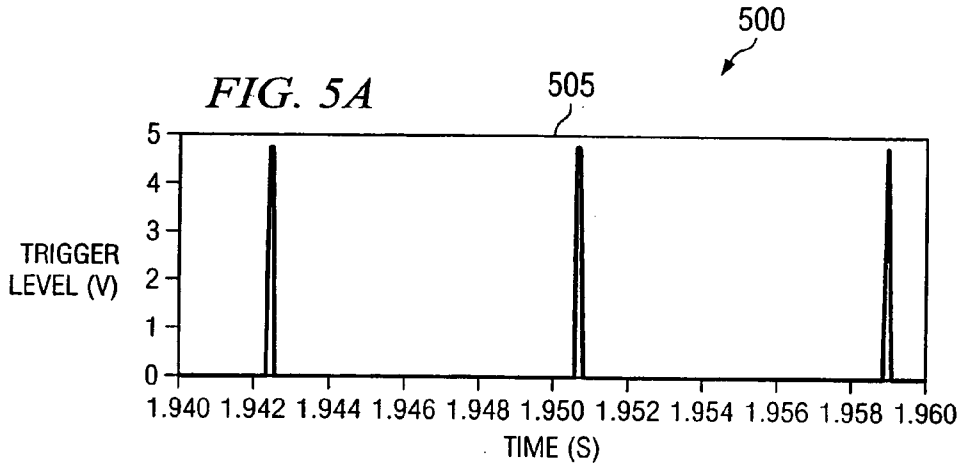
500
505
5
4
3
2
1
0
TRIGGER LEVEL (V)
1.940 1.942 1.944 1.946 1.948 1.950 1.952 1.954 1.956 1.958 1.960
TIME (S)

FIG. 5A

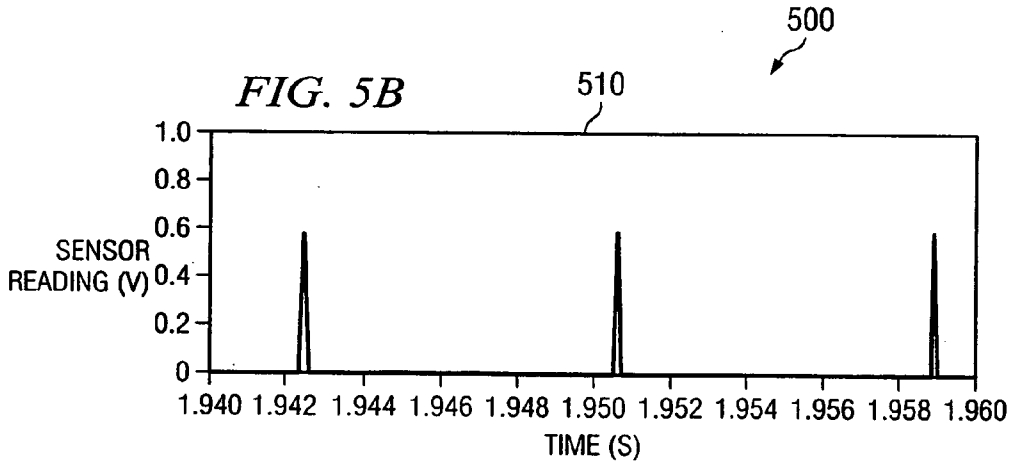
500
510
1.0
0.8
0.6
0.4
0.2
0
SENSOR READING (V)
1.940 1.942 1.944 1.946 1.948 1.950 1.952 1.954 1.956 1.958 1.960
TIME (S)

FIG. 5B

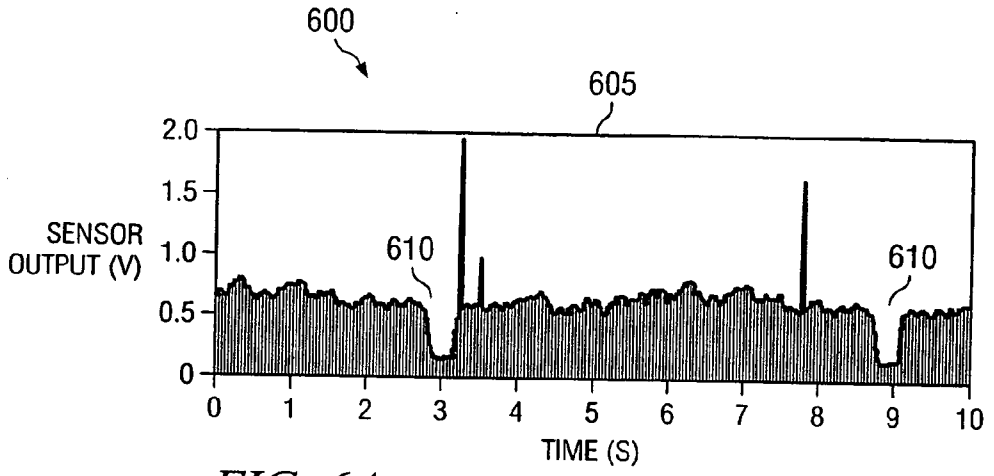
600
605
2.0
1.5
1.0
0.5
0
SENSOR OUTPUT (V)
610
610
0 1 2 3 4 5 6 7 8 9 10
TIME (S)

FIG. 6A

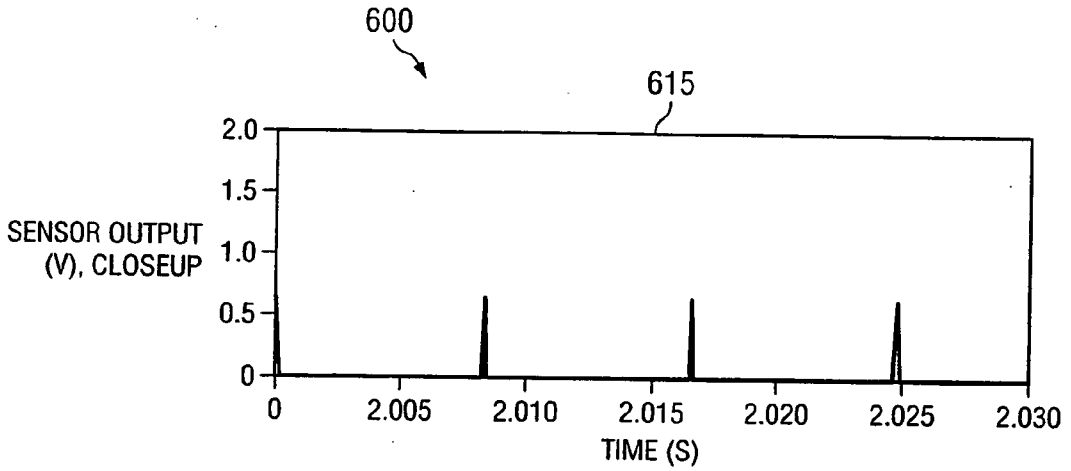
600
615
2.0
1.5
1.0
0.5
0
SENSOR OUTPUT (V), CLOSEUP
0 2.005 2.010 2.015 2.020 2.025 2.030
TIME (S)

FIG. 6B

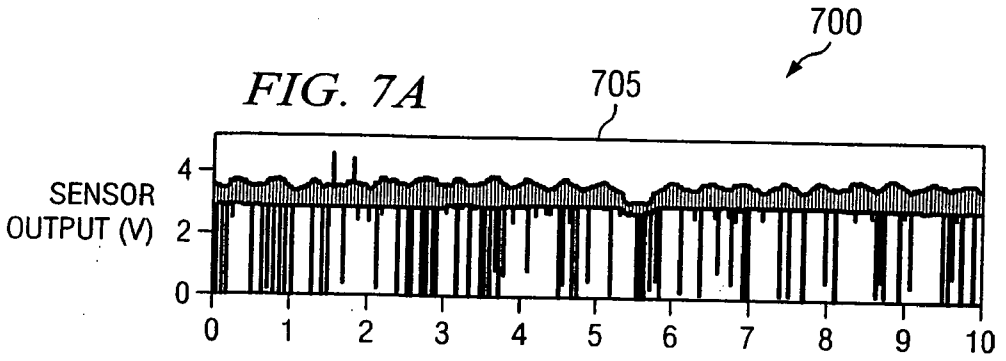

FIG. 7A

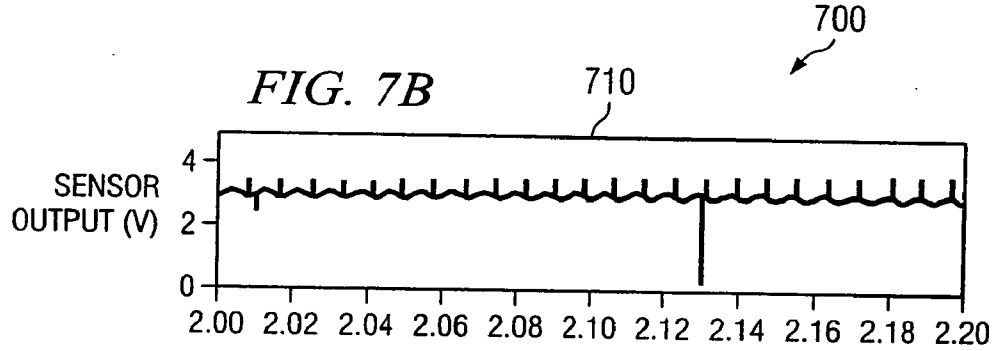

FIG. 7B

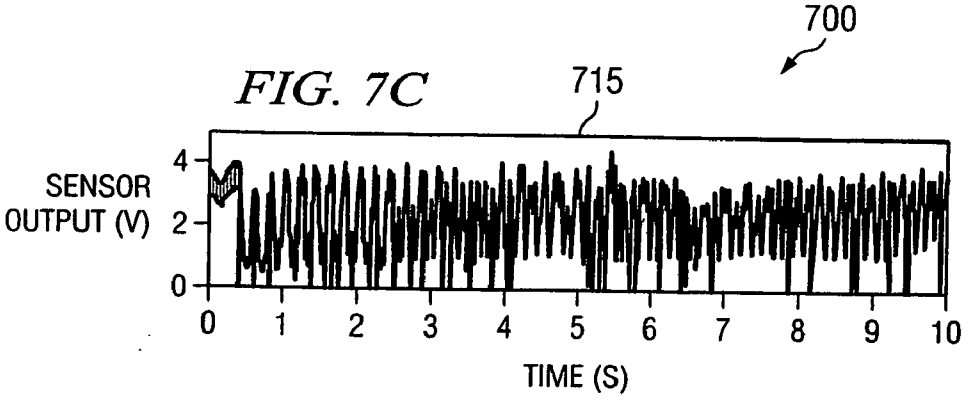

FIG. 7C

FIG. 8

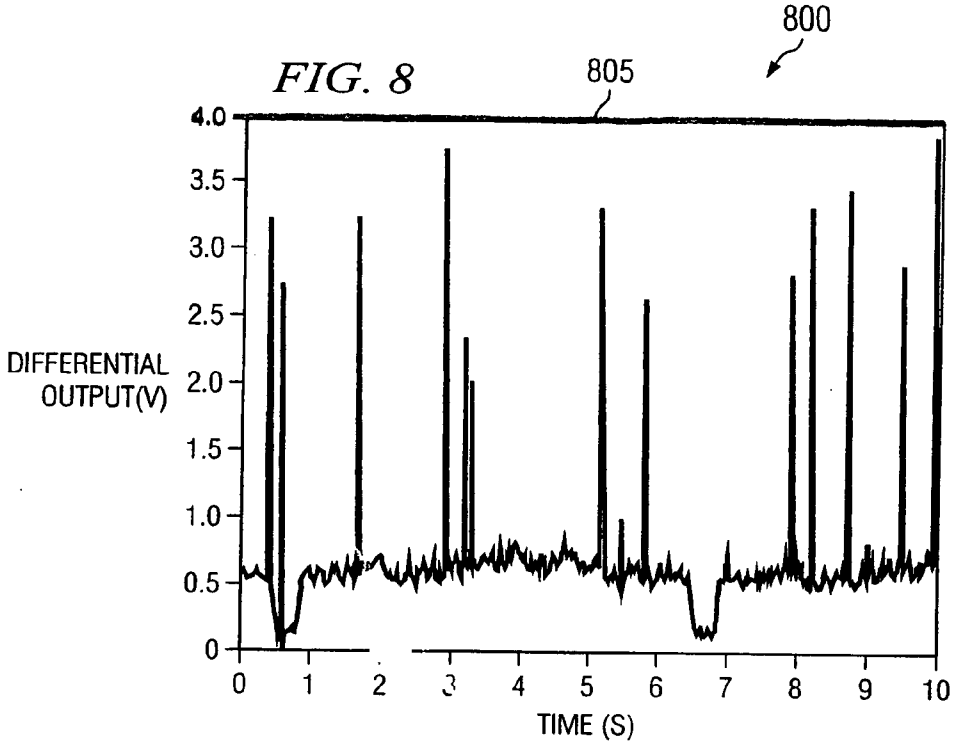
800
805
4.0
3.5
3.0
2.5
2.0
1.5
1.0
0.5
0
DIFFERENTIAL OUTPUT(V)
0 1 2 3 4 5 6 7 8 9 10
TIME (S)

FIG. 9

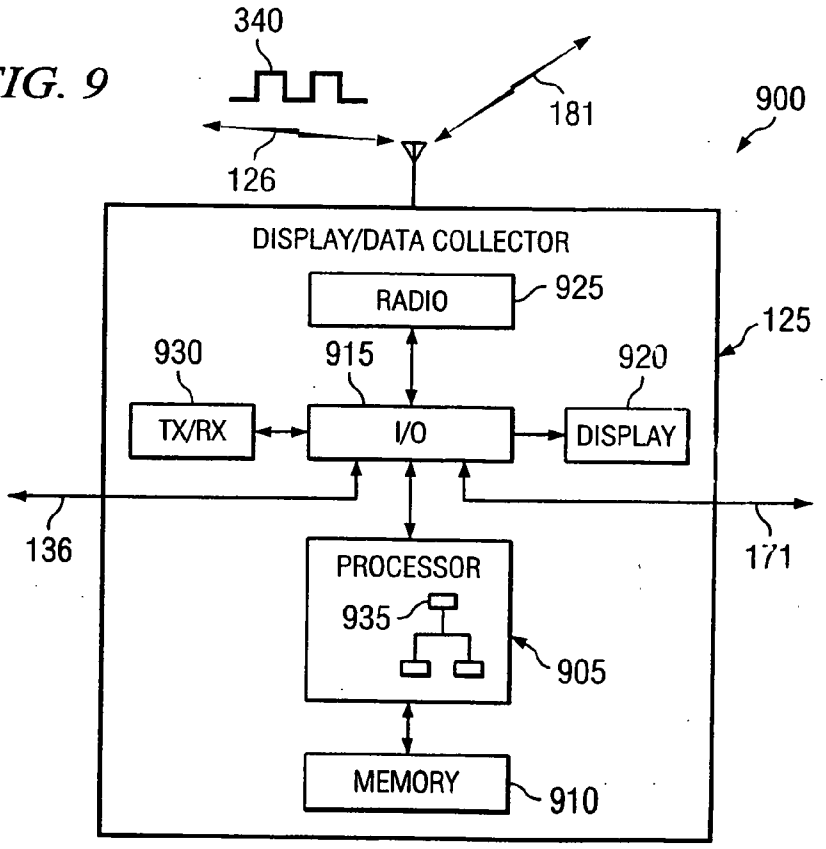
340
181
900
126
DISPLAY/DATA COLLECTOR
RADIO
925
125
930
915
920
TX/RX
I/O
DISPLAY
136
171
PROCESSOR
935
905
MEMORY
910

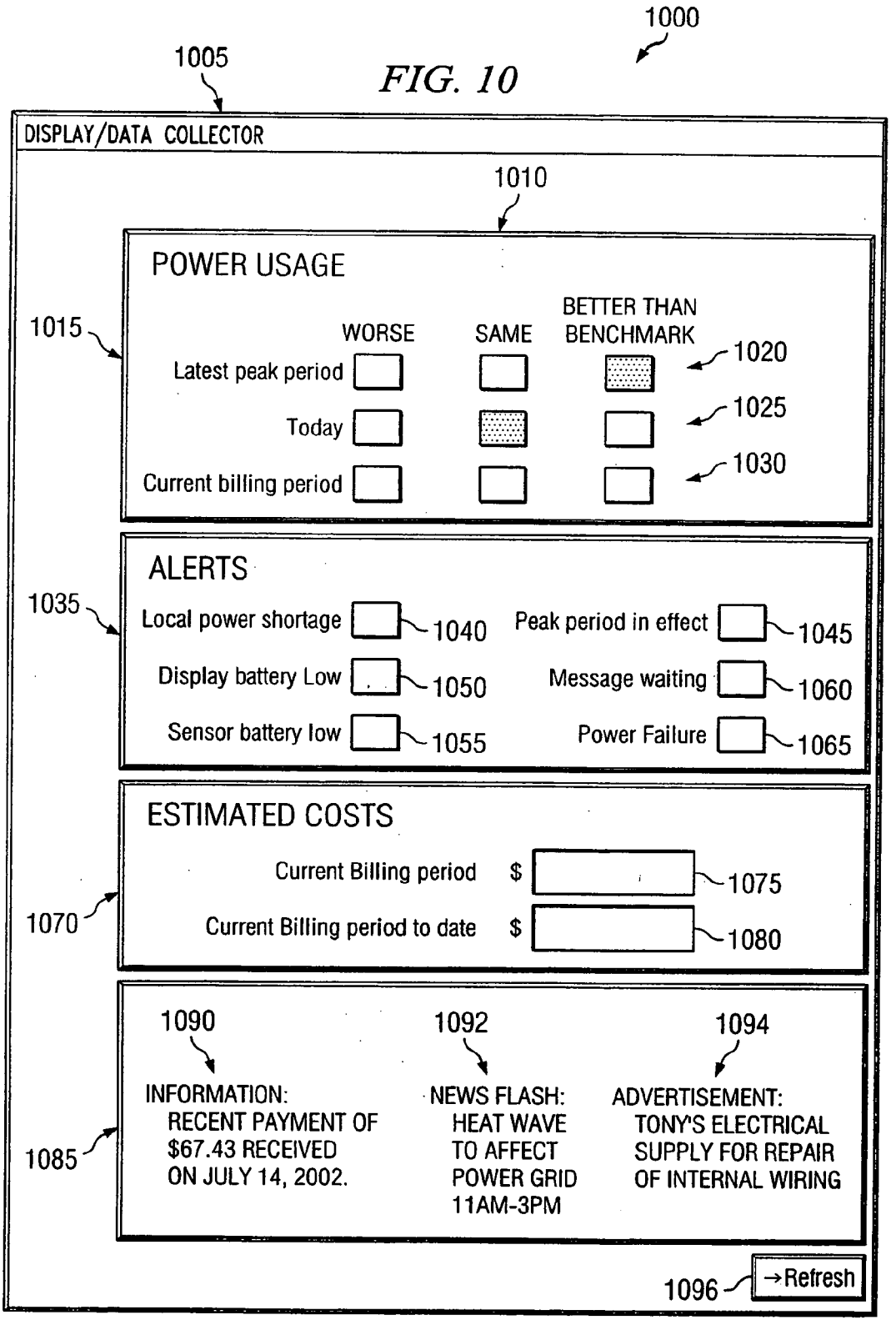
1000
1005
DISPLAY/DATA COLLECTOR
1010
POWER USAGE
1015
WORSE
SAME
BETTER THAN BENCHMARK
Latest peak period
1020
Today
1025
Current billing period
1030
ALERTS
1035
Local power shortage
1040
Peak period in effect
1045
Display battery Low
1050
Message waiting
1060
Sensor battery low
1055
Power Failure
1065
ESTIMATED COSTS
1070
Current Billing period
$
1075
Current Billing period to date
$
1080
1090
1092
1094
1085
INFORMATION: RECENT PAYMENT OF $67.43 RECEIVED ON JULY 14, 2002.
NEWS FLASH: HEAT WAVE TO AFFECT POWER GRID 11AM-3PM
ADVERTISEMENT: TONY'S ELECTRICAL SUPPLY FOR REPAIR OF INTERNAL WIRING
1096
→Refresh

FIG. 10

FIG. 11A

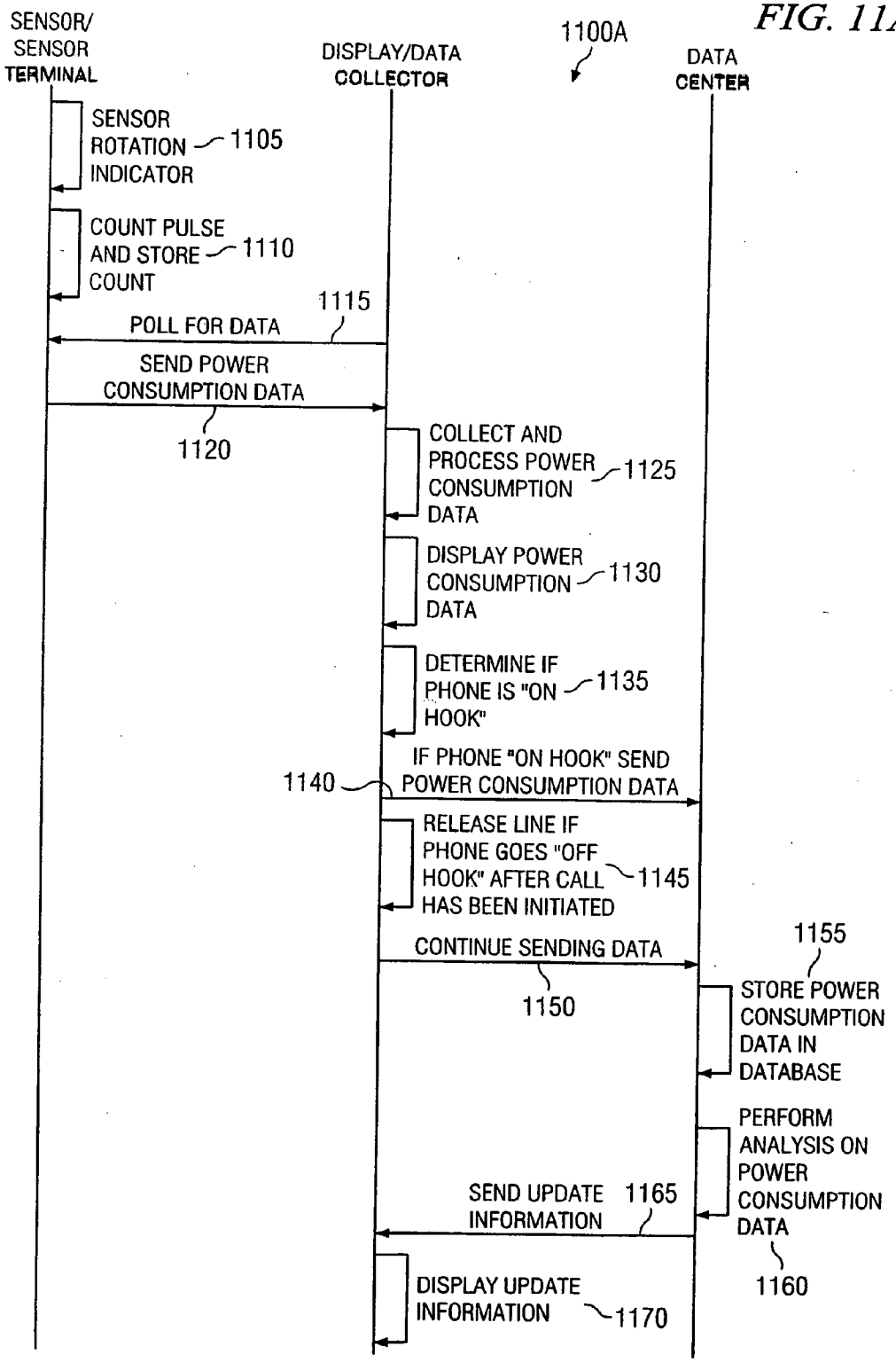
SENSOR/
SENSOR
TERMINAL
DISPLAY/DATA
COLLECTOR
1100A
DATA
CENTER
SENSOR
ROTATION
INDICATOR
1105
COUNT PULSE
AND STORE
COUNT
1110
1115
POLL FOR DATA
SEND POWER
CONSUMPTION DATA
1120
COLLECT AND
PROCESS POWER
CONSUMPTION
DATA
1125
DISPLAY POWER
CONSUMPTION
DATA
1130
DETERMINE IF
PHONE IS "ON
HOOK"
1135
1140
IF PHONE "ON HOOK" SEND
POWER CONSUMPTION DATA
RELEASE LINE IF
PHONE GOES "OFF
HOOK" AFTER CALL
HAS BEEN INITIATED
1145
CONTINUE SENDING DATA
1150
1155
STORE POWER
CONSUMPTION
DATA IN
DATABASE
PERFORM
ANALYSIS ON
POWER
CONSUMPTION
DATA
1160
SEND UPDATE
INFORMATION
1165
DISPLAY UPDATE
INFORMATION
1170

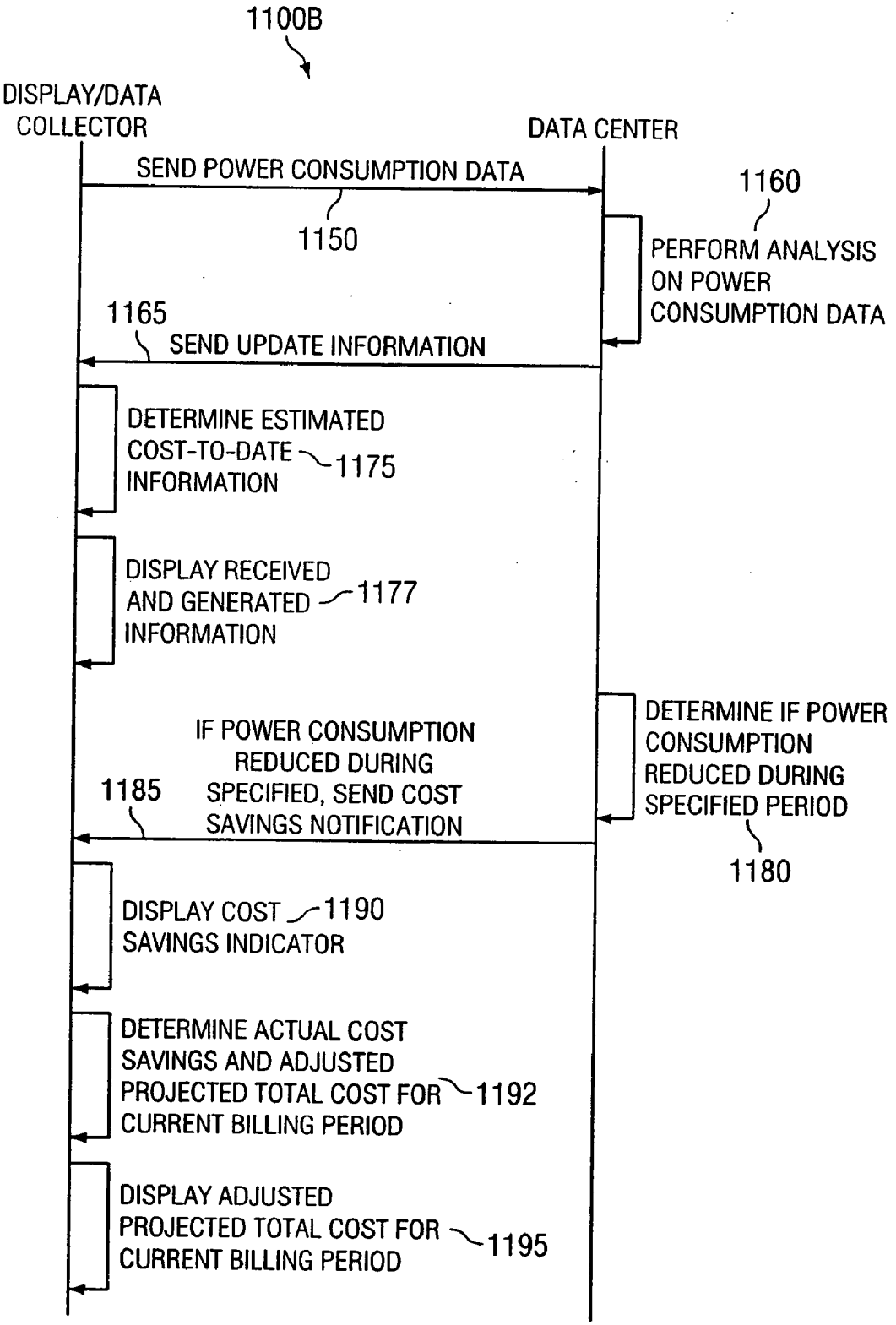
1100B
DISPLAY/DATA COLLECTOR
DATA CENTER
SEND POWER CONSUMPTION DATA
1150
1160
PERFORM ANALYSIS ON POWER CONSUMPTION DATA
1165
SEND UPDATE INFORMATION
DETERMINE ESTIMATED COST-TO-DATE INFORMATION
1175
DISPLAY RECEIVED AND GENERATED INFORMATION
1177
DETERMINE IF POWER CONSUMPTION REDUCED DURING SPECIFIED PERIOD
1180
IF POWER CONSUMPTION REDUCED DURING SPECIFIED, SEND COST SAVINGS NOTIFICATION
1185
DISPLAY COST SAVINGS INDICATOR
1190
DETERMINE ACTUAL COST SAVINGS AND ADJUSTED PROJECTED TOTAL COST FOR CURRENT BILLING PERIOD
1192
DISPLAY ADJUSTED PROJECTED TOTAL COST FOR CURRENT BILLING PERIOD
1195

FIG. 11B

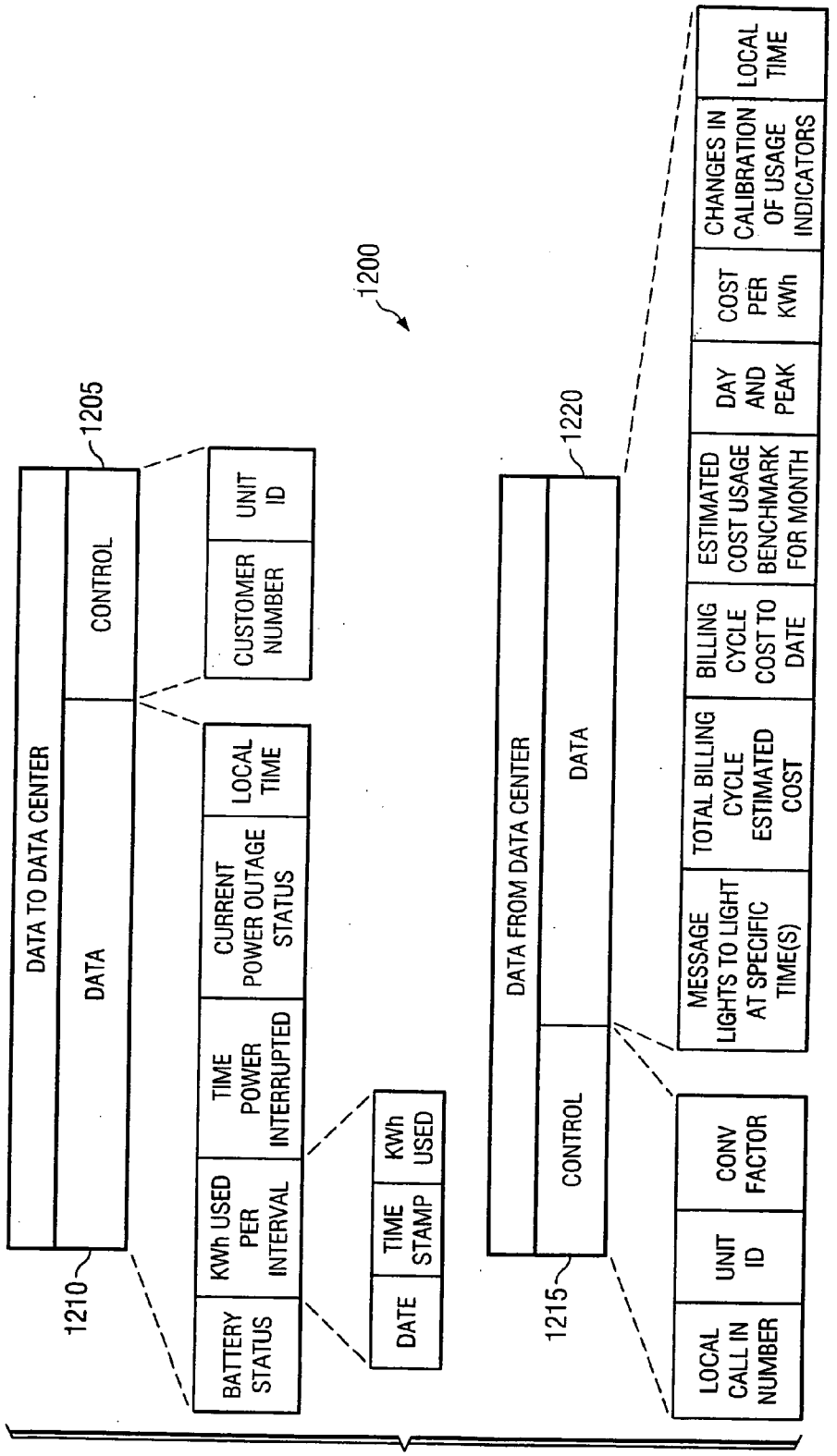
1200
1205
DATA TO DATA CENTER
CONTROL
DATA
1210
BATTERY STATUS
KWh USED PER INTERVAL
TIME POWER INTERRUPTED
CURRENT POWER OUTAGE STATUS
LOCAL TIME
CUSTOMER NUMBER
UNIT ID
DATE
TIME STAMP
KWh USED
1215
LOCAL CALL IN NUMBER
UNIT ID
CONV FACTOR
1220
DATA FROM DATA CENTER
CONTROL
DATA
MESSAGE LIGHTS TO LIGHT AT SPECIFIC TIME(S)
TOTAL BILLING CYCLE ESTIMATED COST
BILLING CYCLE COST TO DATE
ESTIMATED COST USAGE BENCHMARK FOR MONTH
DAY AND PEAK
COST PER KWh
CHANGES IN CALIBRATION OF USAGE INDICATORS
LOCAL TIME

FIG. 12

FIG. 13

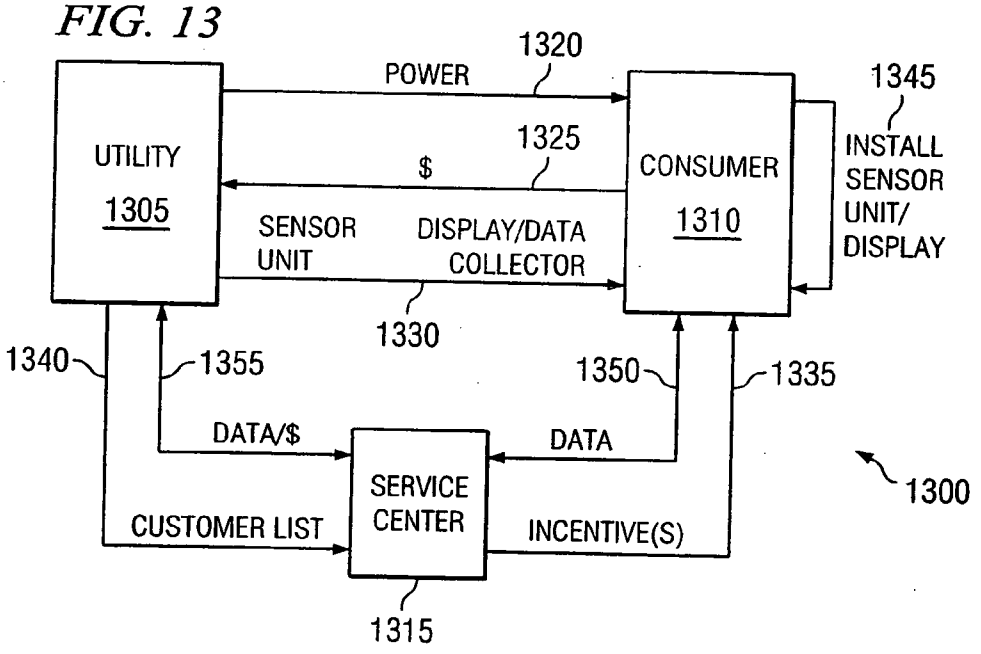
1320
POWER
1345
UTILITY
1305
1325
$
CONSUMER
1310
INSTALL
SENSOR
UNIT/
DISPLAY
SENSOR
UNIT
DISPLAY/DATA
COLLECTOR
1330
1340
1355
1350
1335
DATA/$
DATA
1300
SERVICE
CENTER
CUSTOMER LIST
INCENTIVE(S)
1315

USER-INSTALLABLE POWER CONSUMPTION MONITORING SYSTEM

TECHNICAL FIELD OF THE INVENTION

[0001] The principles of the present invention generally relate to a power consumption or usage monitoring system, and more specifically, but not by way of limitation, to a user installable, interactive power usage monitoring system utilizing a display device.

BACKGROUND OF THE INVENTION

[0002] Energy usage has become more important to consumers or customer, energy producers and governmental bodies over the recent past. Much discussion has occurred regarding energy conservation, especially during peak heavy energy use periods. Generally, however, consumers are unaware of heavy use periods and are unable to assess energy usage until a monthly bill arrives at the end of the billing cycle. Additionally, because a customer has no readily available means to estimate a bill during the billing period, the consumer may be surprised financially when the bill arrives.

[0003] Remote meter reading devices, including electromagnetic field measuring devices, cameras, and optical sensors, have been utilized by power companies to reduce the need for a meter reader to be involved with the billing process and to improve estimates. To date, however, the meter reading devices utilized have had a variety of technical and cost problems and limitations. One typical approach used for installing a meter reading device is to mount the device on the inside of the meter socket (i.e., glass cover of the meter), which requires removal of the meter socket. However, according to most state Public Utilities Commission (PUC) rules, if the meter socket is separated from the meter, the meter has to be recalibrated, which is time consuming and expensive for the power company and/or consumer (generally no less than one-hundred dollars). In addition to recalibrating the meter, the PUC rules state that a person must be legally certified to install the device inside the meter. During the installation process, power to the meter must be turned off and, of course, functional operation of the meter is interrupted. Furthermore, as understood in the art, electronic devices installed inside the meter socket potentially may affect the operation of the meter, which may impose a load or drag on the measurement mechanism of the meter and affect accuracy of the meter.

[0004] Another approach used for designing and installing a meter reading device is to design a device to measure the electromagnetic fields of the power lines or electrical devices of the meter and to mount the device inside the meter-can (i.e., metal casing or base of the meter). This approach is also subject to the aforementioned PUC rules. In order to install the meter reading device, the actual meter may be removed and a sleeve, such as a socket adapter, is inserted. The sleeve is primarily used for mounting the meter reading device. As is apparent, this method of installation requires a certified technician for recalibration of the meter, which, again, is expensive and time consuming.

[0005] Others have designed remote sensors, such as cameras and optical sensors, that may be mounted on the outside of the meter socket. In the case of using a camera, the camera is generally cost, bandwidth, and memory prohibitive for the power company. In the case of using an optical sensor, designers have been required to use an opaque or reflective shield that covers the meter socket to reduce or eliminate shadows and maintain a consistent lighting environment to reduce measurement error. The shield, however, obstructs viewing registers (i.e., dials) located on the front of the meter, thereby making it difficult for a meter reader to perform meter reading duties. As many utilities and/or public utility companies have rules on being able to clearly see the registers, having a shield preventing such direct viewing violates the rules. Additionally, installation for average consumers is generally not possible, thereby requiring a certified technician to install the system and, again, substantially increasing costs for the power company.

[0006] In addition to the meter reading devices, conventional meter reading devices are coupled to data collection units. A data collection unit may independently poll the meter reading device for power usage data and automatically report the power usage data to an affiliated data center. While the automatic data collection aids the power company, a consumer utilizing the data collection units generally still does not have active or passive access to their energy usage prior to the end of the monthly billing period and receive a monthly utility billing statement. And, because the consumer does not have access to interim energy usage, the consumer ultimately becomes complacent and simply relies on the monthly bill. Without having more immediate or up-to-date feedback, the consumer generally does not alter power usage practices.

[0007] Some data collection units may be coupled to a consumer location or an on-site display device, which may be utilized by a service technician or by on-site meter reading personnel when telephone communications are inoperative. The display device may also be used to passively display information received from a data center, including interim power usage and billing information. In addition to receiving power usage data, the display device has been further used to generate utility bills or estimates and/or send home appliance status messages to the data center. Although a consumer may be informed of their current cost-to-date or accumulated energy usage, there is little or no other energy status information available to the consumer. For example, the consumer is generally not privy to power constraints, high cost schedules of the power company, and power grid operational problems. And, without having such information, a consumer may not be able to assist actively in reducing energy load or save money by conserving energy.

SUMMARY OF THE INVENTION

[0008] To overcome (i) expensive and time consuming installation of meter reading devices and (ii) consumers having restricted involvement in energy conservation efforts, a user-installed power usage monitoring system may be utilized by a consumer of a power company. One embodiment according to the principles of the present invention includes a system and method for remotely monitoring power usage from a watt-hour meter (i.e., power meter) utilized to monitor power usage from power usage of a consumer. The system may include a sensor, sensor terminal, and data collection unit. The sensor may be disposed external from the external surface of the watt-hour meter and

be easily installed such that a consumer may perform the installation. The disposition of the sensor may be in an unobstructive position for direct viewing of register(s) located on the front of the watt-hour meter by an individual performing meter reader duties. The sensor terminal may be coupled to the sensor and may include a receiver and transmitter. The receiver may be operable to receive pulses sensed by the sensor and the transmitter may be operable to transmit information indicative of the power usage to the data collection unit. The data collection unit may include a receiver for receiving the information indicative of the power usage from the sensor terminal. Additionally, the data collection unit may include a display to display various information to the consumer, such as intermittent energy costs and notification indicators to alert the consumer of a high cost period or strained power grid, for example. The data collection unit may be coupled to a telephone line for communication with a service center that may perform various levels of analysis to feed-back to the data collection unit for display to the consumer.

BRIEF DESCRIPTION OF THE DRAWINGS

[0009] A more complete understanding of the principles of the present invention and the scope thereof is more readily appreciated by reference to the following Detailed Description of the embodiments presented of the present invention and to the appended claims when taken in conjunction with the accompanying Drawings wherein:

[0010] **FIG. 1** illustrates an exemplary block diagram of a remote power meter monitoring system for operating the principles of the present invention;

[0011] **FIGS. 2A-2D** illustrate exemplary positioning of an optical sensor of the remote power meter monitoring system of **FIG. 1** on a power meter;

[0012] **FIG. 3** illustrates exemplary coupling of a sensor terminal to the optical sensor of **FIG. 2**;

[0013] **FIG. 4A** illustrates exemplary circuit schematics of the optical sensor of **FIG. 2**;

[0014] **FIG. 4B** provides exemplary measurements of the rotating disk of **FIG. 2** starting at two points in time;

[0015] **FIG. 4C** illustrates an exemplary flow diagram for detecting a rotation indicator on a rotating disk of the power meter of **FIG. 2**;

[0016] **FIGS. 5A and 5B** (collectively **FIG. 5**) illustrate an exemplary plot of sensor output with a pulsed LED using the sensing circuit of **FIG. 4**;

[0017] **FIGS. 6A and 6B** (collectively **FIG. 6**) illustrate an exemplary plot of data sampling of a sensor signal while the optical sensor of **FIG. 2** is exposed to indoor bright ambient lighting conditions;

[0018] **FIGS. 7A, 7B** and 7C illustrate an exemplary plots of data sampling of sensor output while the optical sensor of **FIG. 2** is exposed to challenging lighting conditions;

[0019] **FIG. 8** illustrates an exemplary plot of differential output of **FIG. 7**;

[0020] **FIGS. 9 and 10** illustrate an exemplary display/data collector unit of **FIG. 1**;

[0021] **FIGS. 11A and 11B** illustrate exemplary interaction diagrams to perform communication of data functions of the remote power meter monitoring system of **FIG. 1**;

[0022] **FIG. 12** illustrates an exemplary classification of data communicated between the display/data collector unit to a data center to provide billing information to the consumer using the remote power meter monitoring system of **FIG. 1**; and

[0023] **FIG. 13** illustrates an exemplary block diagram for providing commercialization of the remote power meter monitoring system of **FIG. 1**

DETAILED DESCRIPTION OF THE DRAWINGS

[0024] The principles of the present invention will now be described more fully hereinafter with reference to the accompanying drawings, in which exemplary embodiments of the present invention are shown. This invention, however, may be embodied in many different forms and should not be construed as limited to the embodiments set forth herein; rather, these embodiments are provided so that this disclosure will be thorough and complete, and will fully convey the scope of the invention to those skilled in the art.

[0025] The principles of the present invention include utilization of (i) a user-installable sensor coupled to a sensor terminal for sensing a power meter and (ii) an on-site display/data collection unit that may be in communication with an energy provider or data center associated therewith. The display/data collection unit provides a consumer with interface capabilities for viewing power usage, notification messages, and cost estimates. Additionally, the display/data collection unit may provide the consumer with real-time or up-to-date feedback on the power usage. Thus, up-to-date pricing and power constraints may be provided to the consumer to encourage shifting of power usage during peak power usage periods.

[0026] In one embodiment, the sensor may be disposed external of a watt-hour meter. A consumer may install the sensor in an unobstructive position to allow for direct viewing of register(s) located on the front of the watt-hour power meter. The display/data collection unit may poll the sensor terminal for power usage data. Upon receiving the power usage data, the display/data collection unit may then process and/or communicate the power usage data to a server associated with a power provider (e.g., electric company). Results of an analysis performed on the power usage data may be received by the display/data collection unit and displayed as power usage status indicator(s). Notification indicator(s) or alerts may additionally be communicated to the display/data collection unit. The consumer may then use the results to determine billing cost estimates and the notification indicator(s) to selectively conserve energy and save money.

[0027] **FIG. 1** illustrates an exemplary block diagram **100** of a remote power meter monitoring system **105** for operating the principles of the present invention. The remote power meter monitoring system **105**, which monitors power usage of buildings **110***a*-**110***n* (e.g., residences or businesses) each having a power meter **112** for indicating power usage at the specific site, includes an optical sensor **115** associated with the power meter **112**, a sensor terminal **120** electrically connected to the optical sensor **115** via the

connector **121**, and a display/data collector unit **125** that communicates with the sensor terminal **120** via signals **126**. It should be understood that the remote power meter monitoring system **105** may be adapted to also monitor other utility meters, such as gas and water meters. The display/data collector unit **125** may be powered by any internal or external source of power, including, without limitation, a battery, power outlet (not shown), telephone jack **130**, and/or computer **135** via a serial cable **136**. The computer **135** includes a processor **140** coupled to a memory **145**. The processor **140** may be further coupled to an input/output (I/O) device **150**, which may be additionally coupled to a storage medium **155**. A control device **160**, such as a computer mouse, keyboard, joystick, touch screen, and/or voice recognition, may be coupled to the computer **135** for controlling an energy audit software program **165** operating on the processor **140**. The storage medium **155** may provide the energy audit software program **165** with predefined commands and/or power usage data to populate power usage charts (e.g., tables and graphs) discussed in greater detail with regard to **FIG. 10**.

[**0028**] Additionally, the display/data collector unit **125** may be further coupled to (i) a telecommunications network **170** via an internal communications device attached to a phone line **171** of the consumer, (ii) the Internet **175** via the phone line **171** or other interface line **176** to the internal modem or a serial port of the computer **135**, and/or (iii) a wireless communication system **180** via radio signals **181** through a network of base transceiver stations (BTSs) **185***a*-**185***n*; all three of which being operable to communicate data packets **190** from the display/data collector unit **125** to a data center **195** via communication ports **172**, **177**, and **182** respectively. The wireless communication system **180** allows for ease of installing the display/data collector unit **125** conveniently displays up-to-date power usage information on a display (e.g., liquid crystal display) for the consumer.

[**0029**] The data center **195** processes data and performs other functions for communicating between the consumer and a power supplier **199**. As understood in the art, the power supplier **199** generates electricity that is received by the consumer via a power grid **199***a*. The data center **195** handles the bulk of computational and data storage operations on an affiliated server **196** comprising a storage medium **197** and a processor **198**. The storage medium **197** may include a single database or multiple databases (DB) **197***a*-**197***n* for storing the data communicated in the data packets **190** received from the display/data collector unit **125**. The processor **198** processes the data received and stores the results in the databases **197***a*-**197***n*. Such data may include relevant consumer information for specific individuals or aggregate data based on many individuals in a given region or according to other demographic metrics. Using the processed data, the data center **195** provides up-to-date feedback to the display/data collector unit **125** for the consumer to view and use to reduce energy costs.

[**0030**] In an alternative embodiment, the display/data collector unit **125** may be semi or complete stand-alone with capacity to handle some or all the operations of the data center **195**. Using such an embodiment, the display/data collector unit **125** may use an electrically erasable programmable read only memory (EEPROM) to update electrical tariffs (i.e., billing rates), benchmark data (standards used for comparison), and algorithms via a wireless connection with the data center **195** to update various system specific information in the display/data collector unit **125**.

[**0031**] The optical sensor **115** and sensor terminal **120** (forming a sensor unit) may be mounted on the power meter **112** or near it on the wall of the associated building(s) **110***a*-**110***n*. The display/data collector unit **125** may be located in the consumer's building(s) **110***a*-**110***n* or alternatively at a central control location (e.g., management office of building complex). For example, an apartment or building complex may locate the display/data collector unit **125** at a central office to provide a supervisor with power usage information from one or more power meters **112**. The optical sensor **115** collects data regarding the power usage of the consumer by sensing motion of a rotating disk, for example, in the power meter **112**, and may transmit such collected power usage data periodically, aperiodically, or whenever it receives a polling transmit signal from the display/data collector unit **125**. Alternatively, the power usage data may be communicated on an event-driven basis. The display/data collector unit **125** may then transmit this power usage data via data packets **190** to the data center **195** automatically or at predetermined times specified by the consumer or the power supplier. The data center **195** processes the consumer's power usage data and provides up-to-date feedback to the display/data collector unit **125**. Either the display/data collection unit **125** or data center **195** may compare the feedback on the consumer's power usage against a meaningful benchmark profile provided by the data center **195** to generate a power usage benchmark profile. Thereafter, the display/data collector unit **125** may display the power usage benchmark profile and other data from the data center **195** for analysis by the consumer. It should be understood that the display/data collector unit **125** may communicate with the data center **195** on a periodic or non-periodic basis through the consumer's existing phone line or wirelessly as described above, and that the sensor terminal **120** may wirelessly transmit to the display/data collector unit **125** in shorter intervals.

[**0032**] **FIGS. 2A-2D** (collectively **FIG. 2**) illustrate exemplary configurations **200** of the power meter **112** having the optical sensor **115** of the remote power meter monitoring system **105** associated therewith. **FIGS. 2A and 2B** provide front and perspective views of the optical sensor **115** for reading the power meter **112** via a front orientation, and **FIGS. 2C and 2D** provide schematic front and side views of the optical sensor **115** for reading the power meter **112** via a bottom orientation. The power meter **112** comprises a meter-can **215** serving as a base, a meter socket **210** removably mounted on the meter-can **215**, a set of registers or dials **220**, and a revolving disk **230** disposed within and viewable through the meter socket **210**. The optical sensor **115** may be built-in or mounted on the power meter **112** with different types of meter mounts **225** that are user-installable.

[**0033**] As shown, the optical sensor **115** is disposed outside the meter socket **210** so that installation of the optical sensor **115** does not require that the meter socket **210** be removed from the meter-can **215**. Since installation of the optical sensor **115** does not require removal of the meter socket **210**, the power meter **112** does not have to be recalibrated by a technician. Furthermore, the optical sensor **115** is mounted so that the view of the registers **220** is not obstructed. Positioning the optical sensor **115** external from

the meter socket **210** using a meter mount **225**, permits the optical sensor **115** to read the rotating disk **230** of the power meter **112** without being "inside the glass" of the meter socket **210** and without interfering with the view of the registers **220** or other normal operations of the power meter **112**. In one embodiment, the meter mount **225** may be an adhesive coupled to a support for the optical sensor **115**. Alternatively, the meter mount **225** may include a bracket for supporting the optical sensor **115** in a front view relation to the power meter **112**. Additionally, the external positioning of the optical sensor **115** makes it user-friendly in that: (1) little or no wiring is utilized; (2) installation for the average consumer is relatively simple; and (3) the possibility of electrocution during installation is greatly reduced.

[**0034**] The placement of the optical sensor **115** may be relatively imprecise without affecting overall accuracy of reading the power meter **112**. As shown in **FIGS. 2A and 2B**, the optical sensor **115** is mounted on the front face of meter socket **210** by coupling the base of the optical sensor **115** to the sensor mount **225**, which is alignable so that the optical sensor **115** can view the edge of the rotating disk **230**. As shown in **FIGS. 2C and 2D**, the optical sensor **115** may be mounted on the side wall of the meter socket **210** and moved about the meter socket **210** to direct the beam from the optical sensor **115** at either surface or the edge of the rotating disk **230** depending on its orientation within the meter socket **210**. The rotating disk **230** is marked on either its edge or one of its surfaces with a rotation indicator **235** that can be a dark strip or other indicator, having a reflectance different from the rest of the rotating disk **230** that can be viewed from a static position each time the rotating disk **230** makes a complete revolution. The optical sensor **115** is aligned to obtain a correct reading of the rotation indicator **235** from any fixed position outside the meter socket **210** as shown in the embodiments described above. An alternate means for aligning the optical sensor **115** with the rotating disk **230** may include placing a simple optical lens on the meter mount **225** to align and/or focus the optical sensor **115** on the rotation indicator **235**. It should be understood that many different embodiments can be designed for mechanically and/or optically aligning and mounting the optical sensor **115** as long as the view of the registers **220** remains substantially unobstructed for viewing by a meter reader (i.e., a person who visually reads power meters).

[**0035**] In another embodiment shown in **FIGS. 2C and 2D**, a strap **240** may allow the consumer to align the optical sensor **115** in relation to the rotating disk **230** by securing the strap **240** using elastics, clips, hook-and-loop fasteners, etc., to the meter socket **210** or meter-can **215**. Use of the strap **240** provides for the optical sensor **115** to be positioned or oriented in an unobstructive view of the registers **220**, such as below the rotating disk if the rotation indicator **235** is located on the bottom surface of the rotating disk **230**, without utilizing adhesives. The optical sensor **115** may be positioned above the rotating disk **230** if the rotation indicator **235** is located on the top of the rotating disk **230**.

[**0036**] The optical sensor **115** may use an infrared emitter/phototransistor pair to illuminate and detect a change in light reflected off the rotating disk **230** during or in the absence of the rotation indicator **235** being illuminated by the optical sensor **115**. Changes in the reflectance of the rotating disk **230** results in the optical sensor **115** generating pulses having different magnitudes based on the absence or presence of the rotation indicator **235**, respectively. The pulses having different magnitudes result from the rotating disk **230** being of a reflective material, such as aluminum, or having a light colored surface with the exception of the rotation indicator **235**. Reflection from the light portion of the rotating disk **230** is higher than reflection of the rotation indicator **235**, thereby producing the different voltage levels from the optical sensor **115**. The optical sensor **115** may include an emitter/phototransistor pair (e.g., QED 123-ND T1-3/4 880 nm (QT Optoelectronics)/QSC 112-ND T1 880 nm (QT Optoelectronics)) for generating and receiving a narrow beam and having a reception angle of approximately eight degrees. However, it should be understood that other emitter/phototransistor pairs may be used instead and allow for different reception angles. By using the aforementioned emitter/phototransistor, the optical sensor **115** may image the rotation indicator **235** from a distance ranging from at least 13 to 18 mm.

[**0037**] As understood in the art, the distance of the rotating disk **230** from the meter socket **210** varies across power meter models (e.g., Schlumberger J5S and J4FS, ABB AB1R, GE 1-70-S, Sangamo J3 S and JA, Westinghouse D2S, etc.) from at least 13 to 18 mm. Thus, the distance of the background surface (the aluminum plate with the dials and model info) also varies across models from at least 14 to 25 mm. It should be understood that the optical sensor **115** may be designed to operate properly on a large variety of power meter models without the need for tuning or realignment.

[**0038**] **FIG. 3** illustrates as exemplary embodiment **300** of the sensor terminal **120** coupled to the optical sensor **115** of **FIG. 2**. The sensor terminal **120** may be hard-wired to the optical sensor **115** via the connector **121** and mounted on the wall of the associated building(s) **110*a*-110*n*** supporting the power meter **112** or on the power meter **112** itself The sensor terminal **120** may include electronics, such as a counting device **305** coupled to a processor **310** and radio **315**. The processor **310** may be further coupled to a memory **320** and an input/output (I/O) device **325**. The I/O device **325** receives data signals **330**, which may be analog or digital, from the optical sensor **115**. The received data **330** may be time-stamped by a clock or data processing software program **335** operating on the processor **310**. A unique identification number may be assigned to the sensor terminal **120** and stored in the memory **320**.

[**0039**] The electronics of the sensor terminal **120** may include both digital and analog components (including an analog-to-digital (A/D) converter) for receiving the data signals **330**. Alternatively, the sensor terminal **120** may include digital components only and the optical sensor **115** may include an A/D converter. In operation, the data signals **330** may be counted by the counting device **305**. Alternatively, the processor **310** may perform a counting operation to determine power usage by the consumer. In either case, the sensor terminal **120** processes the data signals **330** to generate power usage signals **340** indicative of the power usage data described above and transmit the power usage signals **340** via the radio signals **126** to the display/data collector unit **125** periodically, aperiodically, or upon a polling signal being received by the sensor terminal **120** from the data center **195**.

[**0040**] In addition to transmitting the power usage signals **340**, the sensor terminal **120** further may determine a low

power condition and transmit a low power alert to the display/data collector unit **125** when a battery (not shown) operating the sensor terminal **120** needs to be replaced. It should be understood that the sensor terminal **120** may communicate unidirectionally or bidirectionally. In the case of a bidirectional communication, the sensor terminal **120** may include a receiver in the radio **315** for receiving information, such as time correction or polling requests.

[**0041**] **FIG. 4A** illustrates an exemplary sensing circuit schematic **400** of the optical sensor **115** of **FIG. 2** comprising a sensing circuit **405** including a timer **410**, such as an LM555 timer (i.e., one-shot multivibrator) having a trigger output signal **415**, components R**1**, R**2**, R**3**, C**1** and C**2**, and an infrared (IR) light emitting diode (LED) **420** connected between the resistor R**3** and the trigger output signal **415**. The trigger output signal **415** of the sensing circuit **405** controls the operation of the LED **420** for illuminating the rotating disk **230** (See **FIG. 2**) with an incident beam of light (i) during an adjustable illumination cycle time, ΔT. A phototransistor circuit **425** may be utilized for receiving light reflected (r) by the rotating disk **230**. The phototransistor circuit **425** includes a resistor R**4** and a phototransistor **430** sensitive to the infrared source of light (i). As understood in the art, current flow is reduced when light applied to the phototransistor **430** is reduced. Component values of the sensing circuit **400** are shown in TABLE 1. It should be understood that the component values are exemplary and that other component values may be utilized to produce the same or similar functionality.

TABLE 1

Component	Value
R1	1.1 MΩ
R2	12 KΩ
R3	120 Ω
R4	1 KΩ
C1	0.01 μF
C2	0.01 μF

[**0042**] Resistors R**1** and R**2** are utilized to control the duty cycle of the timer **410** as understood in the art. It is desirable to minimize the current usage of the sensing circuit **400**. Therefore, the components of the sensing circuit **400** have the following ratings: (i) the timer **410** may consume a constant 200 μA, (ii) the LED **420** may consume a peak 30 mA and an average 300 μA, and (iii) the phototransistor **430** may consume 1-3 mA, depending on ambient lighting conditions at the buildings **110***a*-**110***n*. The current consumed by the phototransistor **430** may be reduced further by a factor of 50 percent or more if the phototransistor **430** is turned on by the LED **420**, and kept on for approximately 80 μsec after the LED **420** is turned off, i.e., the ambient cycle time, Δt. As a result, the optical sensor **115** may be capable of measuring light levels both with the LED **420** on and off. In this case, the overall current usage of the phototransistor **430** may be approximately 600 μA on average. Alternatively, this technique may be accomplished by a clock or timer operating on the processor **310**.

[**0043**] Power usage may also be minimized by flashing the LED **420** with a frequency of 120 Hz and a duty cycle of 1% (e.g., 83 μsec out of 8.3 msec), which is set by the values of the resistors R**1** and R**2**. The sampling frequency may be set high enough to sample (i.e., illuminate and measure reflectance) the rotation indicator **235** at least three times (at a maximum speed of one revolution per second (1 rev/sec)). In addition, the LED **420** is chosen to have a higher ON duration than the sampling period of the A/D converter.

[**0044**] Resistor R**3** controls the amount of current used to drive the LED **420**. Resistor R**4** controls the sensor output voltage, S, differential between the ON duration and OFF duration of the LED **420**. Given that current differential is equal to approximately 0.5 mA, and resistor R**4** is equal to 1KΩ, the sensor output voltage differential is approximately 500 mV (0.5V). The sensor output voltage differential may be utilized to determine whether or not the rotation indicator **235** is being sensed at any particular point-in-time.

[**0045**] Both a power supply voltage V**1** and voltage V**2** may be substantially equal to the same voltage of 4.5V. However, in order to minimize energy usage, voltage V**2** may be pulsed in a similar manner as described for the LED **420**. Also, as the voltage V**2** increases, a higher current level flows across the phototransistor **430**. A high current level may cause the phototransistor **430** to saturate. On a typical sunny day in the afternoon, the outside lighting may cause the current on the phototransistor **430**, with the LED **420** on, to become about 2.5 mA. Specifically, when voltage V**2** equals 4.5V and resistor R**4** equals 1KΩ, the saturation current is about 3.8 mA. As mentioned earlier, one way to increase the saturation current is to raise voltage V**2**. Another way to increase the saturation current is to measure the current on the phototransistor **430** with an operational amplifier instead of a simple resistor as understood in the art. It should be noted that the sensing circuit **405** may also operate properly in the presence of rapidly changing lighting conditions, which is discussed in further detail with regard to **FIG. 7**.

[**0046**] **FIG. 4B** includes partial schematic views of the optical sensor **115** and the rotating disk **230** at two different times, t=T_1 and T_2, with the rotation indicator **235** becoming present shortly before the time T_2. The LED **420** of the optical sensor **115** illuminates the rotating disk **230** with the incident beam of light (i) at both times, T_1 and T_2, for the illumination cycle time ΔT_1 in response to the trigger output signal **415** as shown in **FIG. 4B(1)**. The LED **420** is triggered or pulsed at a frequency of about 120 Hz for a cycle time ΔT_1 or about 120 μs. The phototransistor circuit **425** of the optical sensor **115** senses both the ambient light (amb) and the light reflected (r_1 and r_2) by the rotating disk **230** from the incident beam of light (i) at both times, T_1 and T_2, respectively, during the illumination cycle times ΔT_1 and ΔT_2 and the ambient cycle times ΔT_1 and ΔT_2 as shown in FIGS. **4B(2)** and **4B(3)**.

[**0047**] Referring more specifically to **FIG. 4B(2)**, the output voltage, S, of the phototransistor circuit **425** is sampled at a rate of about 25 KHz or every 40 μs. Thus, during the first illumination cycle time ΔT_1 of the LED **420**, three sample "illumination" voltages S_1-S_3 are measured and indicative of the ambient light (amb) and the light reflected (r_1) by the rotating disk **230** from the incident beam of light (i) without the rotation indicator **235** being present. After the first cycle time ΔT_1 the LED **420** is turned off during the first ambient cycle time Δt_1, but the phototransistor circuit **425** continues to sample the ambient light (amb)

to generate additional sample "ambient" voltages S_4-S_6 indicative of the ambient light (amb). The difference between the illumination and ambient sample voltages S_1-S_3 and S_4-S_6, respectively, i.e., non-indicator reflection voltage difference S_r, represents the voltage or intensity of the light reflected (r_1) by the rotating disk **230** without the rotation indicator **235** being present, thus neutralizing the effect of the ambient light (amb) on the reflected light (r_1).

[**0048**] The same process occurs for the second illumination cycle time ΔT_2 of the LED **420** and the ambient cycle time Δt_2 to generate another set of voltage samples S'_1- S'_3 and S'_4-S'_6 as described above and shown more specifically in **FIG. 4B**(**3**), where the difference between the illumination and ambient sample voltages, S'_1-S'_3 and S'_4 -S'_6, respectively, i.e., indicator reflection voltage difference S'_r, represents the voltage or intensity of the light reflected (r_2) by the rotating disk **230** in the presence of the rotation indicator **235**. In this embodiment, the rotation indicator **235** is a dark marking as described above reflecting much less of the incident beam of light (i) so that the voltage or intensity of the light reflected (r_2) is much less than that of the light reflected (r_1) by the rotating disk **230** during the first cycle time ΔT_1. Thus, each time the rotating disk **230** makes a complete revolution, the rotation indicator **235** passes the sensor **115** and generates an indicator reflection voltage S'_r different from the non-indicator reflection voltage difference S_r so that a rotation detect signal R (not shown) is generated for each resolution of the indicator **235**. The rotation detect signal R may be generated by comparing successive non-indicator reflection voltage differences S_r for each illumination cycle ΔT or by any other signal detection means. The sensor **115** transmits the rotation detect signals R to the sensor terminal **120** via the connector **121** as a series of data signals that are counted and processed over time to generate power usage signals **340** indicative of power usage by a consumer. These measurements and comparisons are accomplished even though the ambient light (a) varies because sampling continues after the LED **420** is cycled off during the ambient cycle time, Δt_1. Pulse and sampling rates of the LED **420** and the phototransistor circuit **425** may be varied as required by different meters **112**.

[**0049**] The data processing software program **335** of the sensor terminal **120** performs a variety of functions including determining whether the rotation indicator **235** is present based on whether the indicator S_r or non-indicator S'_r reflection voltage difference is measured. Because of the differential measurement, the measurement is substantially invariant to ambient light level and fluxuations due to momentary shadows. Any measurement errors may be filtered out using signal processing techniques as understood in the art. Specifically, to compute the differential output for each pulse, the sensor terminal **120** and optical sensor **115** may perform the following operations:

[**0050**] 1. Responsive to a trigger signal, the LED **420** is pulsed (i.e., turned on) to illuminate the rotating disk **230** for a predetermined time duration (e.g., 120 μs), and the output sensor (e.g., phototransistor **430**) may be sampled over a time duration (e.g, 240 μs) at a particular interval rate (e.g., 40 μs). For example, sampling at 25 KHz produces six samples, a first three while the LED is on (e.g., ΔT_1) to measure the ambient light (amb) plus the reflected signal r_1 and a second three while the LED is off (ΔT_1) to measure the ambient light level (amb) (see, **FIG. 4B**, sample voltages S_1-S_3 and S_4-S_6).

[**0051**] 2. Set a variable V_max equal to the maximum sampled value of the first three sample voltages (e.g., S_1-S_3), and set a variable V_min equal to the minimum sampled value of the second three sample voltages (e.g., S_4-S_6). It should be understood that the order of the first and second samples may be switched. It should further be understood that other sampling schemes, such as alternating the LED **420** on and off, may be utilized.

[**0052**] 3. The differential output signal, having an approximate magnitude of either the indicator S_r or non-indicator S'_r reflection voltage difference, may be computed by: V_d= V_max−V_min. Because a differential sampling of light levels is performed very quickly, 40 μs apart over a span of 240 μs, and shadows are unlikely to start or stop within such a narrow interval (i.e., altering lighting conditions are substantially invariant), the optical sensor **115** is robust to the ambient light level (amb) and also to momentary shadows and reflections. It should be understood that the pulse duration of the LED **420** and sampling of the phototransistor **430** may be altered. The result of such processing for the case where strong, variable shadows are present (see **FIG. 7C**) is illustrated in **FIG. 8**. Despite occasional errors (mostly due to errors in A/D conversion), the rotation indicator **235** is clearly present at t=0.8 s and t=6.8 s in **FIG. 8**.

[**0053**] **FIG. 4C** illustrates an exemplary flow diagram **430** for detecting the rotation indicator **235** on the rotating disk **230** of the power meter **112**. The process starts at step **435**. At step **440**, the software program **335** operating on the processor **310** may assign an optimal threshold level, such as 0.2 volts (V), to a rotation indicator threshold variable, STRIPE_THRESH. This threshold level may work over an entire range of ambient lighting conditions (i.e., dark to intense lighting). It should be understood that if a more robust threshold is desired, the optical sensor **115** may be calibrated so that the indicator reflection voltage difference S_r is below approximately 0.1V and the non-indicator reflection voltage difference S'_r is above approximately 0.3V. The values are arbitrary and may be altered by altering the component values of the sensing circuit **405**. If intensely bright ambient light levels cause the sensor output voltage S to saturate (i.e., sensor output voltage S nearly equals power supply voltage V**2**) and it becomes substantially difficult for the optical sensor **115** to obtain valid power readings, the software program **335** operating on the processor **310** has the capacity to detect this condition and alert the consumer. Alternatively, a more sophisticated circuit may be used to keep the sensor output voltage S within a valid range.

[**0054**] At step **445**, the software program **335** may assign a minimum interval length value, such as one second, to a last stripe interval variable, MIN_STRIPE_INTERVAL. This may be based on a calculation of a maximum rotating disk **230** spin rate, which may be further based on an expected maximum instantaneous power. At step **450**, the software program **335** may compute the differential sensor output (i.e., either the indicator or non-indicator reflection voltage difference) for each LED pulse generated. In order to produce data that is relatively invariant to ambient light level and fluctuations due to momentary shadows, the dif-

ferential sensor output for each LED pulse may be computed as previously discussed (i.e., take six samples (three with and without the LED **420** turned on and generate a differential output signal)).

[**0055**] At step **455**, the software program **335** may collect a sequence of differential pulse output values at a pulse rate of 120 Hz. This procedure may be performed in order to determine if the stripe is present or not. If a status of the stripe was previously determined, the status becomes the current stripe status until a further determination is made. At step **460**, a determination is made whether the current stripe status corresponds to the status STRIPE_PRESENT. If the current stripe status is equal to STRIPE_PRESENT, at step **465**, a determination is made whether the consecutive differential pulse output values are greater than the threshold STRIPE_THRESH (e.g., 0.2V). If the consecutive differential pulse output values are greater than STRIPE_THRESH, at step **970**, the current stripe status is assigned the status STRIPE_NOT_PRESENT. At step **975**, the trigger signal pulses the LED for 120 μs. The process continues at step **445**.

[**0056**] Conversely, if the current stripe status does not equal STRIPE_PRESENT at step **460**, then at step **480**, a determination is made whether the last stripe interval is greater than or equal to MIN_STRIPE_INTERVAL. If the last stripe interval is greater than or equal to MIN_STRIPE_INTERVAL at step **485**, the current stripe status is assigned the status STRIPE_PRESENT. If, however, the last stripe interval is less than MIN_STRIPE_INTERVAL, step **480** is repeated. At step **475**, the trigger signal pulses the LED for 120 μs. The process continues at step **445**.

[**0057**] It should be noted that the above described process may robustly detect the presence of the rotation indicator **235**, and may accurately estimate cumulative power usage. The estimated accuracy may be well below an error rate of 1%. It should be understood that alternative algorithms may be utilized to perform a similar functionality to improve robustness in measuring the rotating disk **230** without use of a shield to cover the meter socket **210**. As previously mentioned, the optical sensor **115** may be capable of operating properly on a wide variety of power meter models without any tuning or realignment, particularly on the Schlumberger J5S, ABBAB 1R, and GE 1-70-S models. In one embodiment, the sensor mount **225** may have a dial that allows a consumer to finely adjust the beam angle to ensure that the light beam hits the rotating disk **230**. A correct reading may be obtained from the optical sensor **115** without any adjustment if horizontal axes of the optical sensor's frame are aligned with the rotating disk **230**.

[**0058**] **FIGS. 5A and 5B** (collectively **FIG. 5**) illustrate exemplary operational plot of the optical sensor **115** with a pulsed LED **420** using the sensing circuit **400** of **FIG. 4** with no ambient light (amb). In operation, according to the principles of the present invention, a trigger signal on the output **415** of the timer **410** controls the pulsing of the LED **420**. The trigger signal may pulse the LED **420**"ON" for 120 μs at a 120 Hz rate, as seen in the plot **505**. As previously stated, since the phototransistor **430** is sensitive to the light emitted by the LED (i.e., incident beam of light (i)) light reflected (r_1) by the rotating disk **230** onto the phototransistor **430** generates a sensor reading, which may be averaged over multiple non-indicator reflection voltage difference S_r, as illustrated in plot **510**. The sensor readings in plot **510** being 0.6V indicate that the rotating indicator **235** was not present during pulsing of the LED **420**. If, however, a low indicator reflection voltage difference (approximately 0.1V, not shown) is measured during the LED pulse, that would indicate that the rotation indicator **235** was present (i.e., illuminated by the LED **420**).

[**0059**] **FIGS. 6A and 6B** (collectively **FIG. 6**) illustrate an exemplary plots **600** of data sampling of the signal S generated by the phototransistor **430** while being exposed to indoor bright ambient lighting (amb) conditions. Plot **605** illustrates sensor signal data being sampled over a ten second period with an indoor ambient lighting (amb) condition. When the rotation indicator **235** is present over a time span **610**, the sensor reading goes down to an average of approximately 0.1V ($S'_r=(\overline{S'_1S'_2S'_3})-(\overline{S'_4S'_5S'_6})$) from an average of approximately 0.6V ($S'_r=(\overline{S'_1S'_2S'_3})-(\overline{S'_4S'_5S'_6})$) during the LED pulse. It is apparent that the rotation indicator **235** was illuminated by the LED **420** and measured by the sensing circuit **405** at the two time spans **610** at approximately three and, nine seconds (t=3 s and t=9 s). Again, the high sensor reading of 0.6V indicates that the rotation indicator **235** is not present. It should be understood that circuitry or software may be utilized to invert or alter the values of the sensed signals, but that the functionality of the sensor terminal **120** may be substantially the same.

[**0060**] Plot **615** (**FIG. 6B**) illustrates a close-up of the sensor signal data. The LED **420** is pulsed every $\frac{1}{120}$ seconds (i.e., 120 Hz) for 120 μs. The frequency at which the sensor signal data is sampled (e.g., 25 KHz) during the pulse of the LED (i.e., during the 120 μs) allows the sensing circuit **405** to robustly detect the presence of the rotation indicator **235**—even under challenging lighting conditions.

[**0061**] **FIGS. 7A, 7B** and 7C (collectively **FIG. 7**) illustrate exemplary plots **700** of data sampling by the optical sensor **115** while exposed to challenging ambient lighting (amb) conditions. While the plots provide for an indication as to the effectiveness of the optical sensor **115**, these plots are illustrative of various ambient lighting (amb) conditions that the sensor may be exposed while in operation. These ambient lighting conditions generally define the environment that use of the optical sensor **115** according to the principles of the present invention, and provide design guidelines for design of the optical sensor **115** and sensor terminal **120**.

[**0062**] Plot **705** (**FIG. 7A**) illustrates sensor signal data being sampled while exposed to a simulated outdoor brightness level (i.e., ambient lighting (amb)) by showing a bright light, held 10 cm away from optical sensor **115**, on the optical sensor **115**. The bright light causes the baseline sensor output to be 3V, which may be better observed on plot **710** (**FIG. 7B**) between times 2.0 and 2.2 seconds. However, the LED pulse still increases the sensor outputs by approximately 0.6V when the rotation indicator **235** is not present and only by approximately 0.1 V when the rotation indicator **235** is present. Thus, it is still apparent that the rotation indicator **235** was present at around t=5.8 s.

[**0063**] Plot **710** illustrates yet a more challenging lighting condition. In this example, the optical sensor **115** is exposed to simulated fluctuating shadows produced by waving a hand quickly and repeatedly between the sensor and the incandescent light. From this plot **710**, it is not easy to

visually discern the presence of the rotation indicator **235**. Plot **715** (**FIG. 7C**) illustrates strong, variable shadows on the optical sensor **115**.

[**0064**] **FIG. 8** illustrates an exemplary differential output **800** to provide the ability to measure the various simulated lighting conditions of **FIG. 7**. Despite occasional errors (mostly due to errors in A/D conversion), the rotation indicator **235** is clearly present at t=0.8 s and t=6.8 s. The software program **335** operating on the processor **310** of the sensor terminal **120** may use a measurement technique and/or an algorithm to make the detection of the rotation indicator **235** more robust with regard to difficult lighting conditions (see, **FIGS. 7B and 7C**). The algorithm may take into account: (i) changes in ambient lighting (amb) (especially if the power meter **205** is mounted outdoors and subject to bright sunlight), (ii) momentary shadows and reflection that might simulate the presence of a rotation indicator **235**, and (iii) other noise sources (such as electromagnetic generating devices).

[**0065**] **FIG. 9** illustrates exemplary electronics **900** of the display/data collector unit **125** of **FIG. 1**. The display/data collector unit **125**, which may wirelessly communicate with the sensor terminal **120** via the signals **126** for receiving the power usage signals **340**, includes a processor **905** coupled to a non-volatile memory **910**. The processor **905** is further coupled to an input/output (I/O) device **915**, which may be further coupled to a display device **920**. The I/O device **915** may be further coupled to a radio **925** and still further be coupled to a radio **930** capable of transmitting and receiving. The radio **930** receives updated information from the data center **195**, which may operate an energy audit software program **935** operating on the processor **905**.

[**0066**] The display/data collector unit **125** may be in communication with the data center **195** via the telecommunications network **170**, the Internet **175**, or the wireless communication system **180** as described above. The display/data collector unit **125** may access the data center **195** on a real-time, up-to-date, or non-real-time basis. In one embodiment, the display/data collector unit **125** may be enclosed in a plastic casing. Additionally, the display/data may be powered by the consumer's house power or by batteries, which may be primarily used as backup power in the event of a power outage or accidental disconnection.

[**0067**] The non-volatile memory **910** may store many hours of data, including device number, current date, power usage signals **340**, and may be driven by an internal clock within the processor **910**. The radio **925** may transmit a wireless polling signal to the sensor terminal **120**. Thereafter, the display/data collector unit **125** may (i) collect a pulse count (i.e., number of indicator counts per time period) from the sensor terminal **120**, (ii) convert the pulse count to a kilowatt per hour (KWh) power usage value, and/or (iii) store a record of this power usage value in the processor **905**.

[**0068**] The display/data collector unit **125** may initiate a call to the data center **195** based on transmission schedules, power failure, and/or when the consumer depresses a "Send Data" button on the face of an interactive display interface. The display/data collector unit **125** may communicate with the data center **195** on at least a daily basis through (i) the existing phone line **171** of the consumer using a telecommunications network **170**, (ii) a computer **135** via the Internet **175** or other network, and/or (iii) wirelessly via base transceiver stations (BTSs) **185***a*-**185***n*. Alternatively, the display/data collection unit **125** may transmit data to the data center **195** on a nightly basis between the hours of 12:00 A.M. and 5:00 A.M., for example.

[**0069**] TABLES 1 and 2 are exemplary data elements uploaded and downloaded, respectively, between the display/data collector unit **125** and data center **195**. It should be undestood that other data elements associated with monitoring power usage may additionally and/or alternatively be communicated between the display/data collector unit **125** and data center **195**. The uploading and downloading of the data elements are further discussed in relation to **FIG. 12**.

TABLE 1

Upload Data
Consumer Number
Unit Identifier
Battery Status
Date
Time Stamp
KWh Used Per Time Period
Total KWh Used
Time Power Interrupted
Current Power Outage Status
Local Time

[**0070**]

TABLE 2

Download Data
Local Call In Number
Unit Identifier
Conversion Factor
Message (Indicators to Activate)
Total Billing Cycle Estimate Cost
Billing Cycle Cost To Date
Estimate Cost Usage Benchmark For Month
Day and Peak
Cost Per KWh
Changes in Calibration of Usage Indicators
Local Time

[**0071**] **FIG. 10** is an exemplary illustration **1000** of an interactive display interface of the display/data collector unit **125**. The interactive display interface **1005** may include a monitor or display **1010** that is X-lines long and Y-characters wide. The monitor **1010** may use a series of indicators to inform a consumer of the power usage. Alternatively LEDs may be utilized. For example, the monitor **1010** may display appropriate indicators (e.g., alert, peak time, and message indicators) during times defined by the data center **195** and/or power supplier **199**. The indicators may provide the consumer with accurate power usage benchmark profiling and/or alerts and messages.

[**0072**] Power usage indicators **1015** may include: (i) latest peak period indicators **1020**, (ii) day peak indicators **1025**, and (iii) current billing period indicators **1030**. The latest peak period indicators **1020** may be calculated using a variance of kilowatts per hour (KWh) actually used during the latest peak period. The KWh may be compared to benchmark data, which is provided by data center **195** for that point-in-time (e.g., peak period). The display/data collector unit **125** may display the variance in a display

indicator in response to calibration information from data center **195**. For example, the monitor **1010** may be instructed to illuminate or activate one indicator rather than two indicators for a certain percentage of power usage that falls below a benchmark. The day and current billing period indicators **1025** and **1030**, respectively, may be calculated in a similar manner as the latest peak indicators **1020**.

[**0073**] Notification indicators or alerts **1035** may include: (i) power network status indicators (**1040**, **1045**), (ii) low battery indicators (**1050**, **1055**), (ii) message indicator **1060**, and (iv) power failure indicator **1065**. The power network status indicators (**1040**, **1045**) provide up-to-date feedback to the consumer concerning peak hours and special times. This feedback information from a power company or service center allows the consumer to interactively decrease their monthly power bill by reducing power usage by being more informed about a change in a status of the power network and higher power costs associated with power constraints of the power network.

[**0074**] The low battery indicator **1055** may be displayed if the display/data collector unit **125** (i) receives a low battery signal from the sensor terminal **120** or (ii) does not receive data from the sensor terminal **120**. Similarly, the low battery indicator **1050** may be displayed if a low battery signal is generated by the display/data collector unit **125**. Additionally, a notification indicator may be provided to notify the consumer of inefficient or malfunctioning equipment, including appliances, on-site.

[**0075**] The message indicator **1060** is displayed upon instruction from the data center **195** that is intended to notify the consumer that a message is waiting at the data center **195** or at a website associated with the data center **195**. If the display/data collector unit **125** reports a power failure (e.g., the display/data collector unit **125** becomes disconnected), the display/data collector unit **125** may display the power failure indicator **1065** to inform the consumer that the power failure has been reported to the data center **195**.

[**0076**] Estimated costs indicators **1070** may be included on the monitor **1010** to allow the consumer to view real-time or up-to-date power pricing. For example, by parsing information received from the data center **195**, the display/data collector may determine or display (i) an estimated projected cost **1075** for the current billing cycle, and (ii) forecast an estimated billing cycle to date cost **1080**. It should be noted that the data center **195** may determine the estimated total cost and estimated cost for billing the cycle to date and communicate the information to the display/data collector unit **125**. The display/data collector unit **125** may use an algorithm operating on the processor **905** to project the estimated cost for the billing cycle to date. The results of the algorithm may be based on data received from data center **195**, such as: (i) cost of KWh used and (ii) benchmark power usage for the day. In addition, the algorithm may use data computed by display/data collector unit **125**, such as (i) variance from the power usage benchmark profile so far during the billing period, and (ii) variance from the power usage benchmark profile for the time of day, where the benchmark profiles may be developed from past performance or estimated based on the profile of the consumer, for example.

[**0077**] The energy audit software program **935** may allow the consumer to view the KWh power usage and dollar usage in table and graph formats on a monitor of a computer **135**. The consumer may also forecast the current month's power bill and run "what-if" scenarios. Alternatively, the consumer may access a website (not shown) associated with the data center **195** to view more detailed information on the Internet. For instance, the website may provide the consumer with (i) highly customizable hourly, daily and monthly energy usage graphs, and (ii) personalized suggestions on how to conserve power.

[**0078**] The data center **195** or utility provider may give the consumer a rebate if they reduce demand during a power constraint, such as a peak period. If the consumer reduces their power usage during the power constraint by a specified amount, the data center **195** may notify the consumer through the display/data collector unit **125** by the alerts **1040** and **1045**, for example. Thereafter, the display/data collector unit **125** may use an algorithm to determine actual power reduced during the power constraint and approximate cost savings that the consumer is entitled to receive based on a current billing rate for KWh used. In addition, the algorithm deducts the cost savings from the estimated total cost for the current billing cycle **1075**. Thereafter, an adjusted estimated total cost for the current billing cycle **1075** may be displayed in the estimated costs section **1070**. It should be understood that the consumer may not receive a cost savings if a specified amount of power, which may be determined by the data center **195**, is not conserved.

[**0079**] An information section **1085** may display both text and images in providing information to the consumer. In one embodiment, the information section **1085** may provide information **1090**, new flash **1092**, and an advertisement **1094**. The information **1090** may be personal information and provide the consumer with recent payment information. The new flash **1092** may provide information to the consumer regarding the affect of a heat wave on the power grid. The advertisement **1094** may provide the consumer with information of a local, regional, or national company that may offer products and/or services to consumers. Finally, a refresh button or area **1096** may allow the consumer to refresh the display. It should be understood that the display/data collector unit **125** may include buttons or other selectors to allow the consumer to interact with the interactive display interface **1005**. Still yet, the interactive display interface **1005** may be a touch screen to allow the consumer to touch an area, such as the advertisement, via a stylus or otherwise to prompt for additional advertisement information to be downloaded as understood in the art.

[**0080**] In an alternative embodiment, the display/data collector unit **125** may have the capacity to allow the consumer to conduct a transaction between the data center **195** or power supplier **199**. In addition the display/data collector unit **125** may be upgraded with communication electronics (e.g., wireless, household wiring, etc.) to automatically control certain household devices, such as thermostat, washer, dryer, and water heater, during times of high power cost or power constraints on the power grid.

[**0081**] **FIG. 11A** illustrates an exemplary interaction diagram **1100**A to perform communication of data functions of the remote power meter monitoring system **105** (**FIG. 1**). The process may include interaction between the optical sensor **115**/sensor terminal **120** combination, display/data collector unit **125**, and data center **195**. It should be under-

stood that a utility service provider (e.g., power supplier **199**) and/or data center **195** may simultaneously process power usage data, and that the display/data collector unit **125** may be a stand-alone unit.

[**0082**] At step **1105**, the optical sensor **115** may measure power usage by detecting light reflected off the rotation indicator **235** on the rotating disk **230** of the power meter **205**. The sensor terminal **120** may count pulses over a duration of time generated by the optical sensor **115** and store the pulse count at step **1110** so that a rate of usage may be computed. Upon a polling request from the display/data collector unit **125** at step **1115**, the sensor terminal **120** may transmit the pulse count over the duration of time to the display/data collector unit **125** at step **1120**. At step **1125**, the display/data collector unit **125** may collect and process the power usage data for the consumer to view at step **1130**.

[**0083**] At step **1135**, a determination may be made as to whether the consumer's telephone line **171** is "On Hook". If the telephone line is "On Hook", the display/data collector unit **125** may initiate a call (possibly based on transmission schedule) to the data center **195** at step **1140**. Otherwise, if telephone line **171** is "Off Hook", the display/data collector unit **125** delays initiation of the call until "On Hook". At step **1145**, the display/data collector unit **125** hangs up the telephone line **171** if the telephone line goes "Off Hook" during the call. The display/data collector unit **125** may check the telephone line **171** periodically for an "On Hook" status. Once the "On Hook" status has been established, the display/data collector unit **125** may make another call to the data center **195** and continue transmitting the power usage data at step **1150**. At step **1155**, the data center **195** may store the power usage data in a database. The data center **195** may then perform analysis on the power usage at step **1160**. Upon completing the analysis, the data center **195** may transmit updated information to the display/data collector unit **125** at step **1165**. Additionally and/or alternatively, the updated information may be communicated to the display/data collector unit **125** upon next call by the display/data collector unit **125** to the data center **195**. The updated information may be automatically displayed on the interactive monitor for the consumer to view at step **1170**.

[**0084**] **FIG. 11B** illustrates an exemplary interaction diagram **1100**B to forecast monthly power usage costs for a billing period using the power meter monitoring system (**FIG. 1**). As previously described in **FIG. 11A**, data usage information may be communicated between the display/data collector unit **125** and the data center **195** at steps **1150**, **1160**, and **1165**. The display/data collector unit **125** may receive updated information from the data center **195**, such as cost-to date estimated cost, billing rate changes, notification of alerts and messages, updated peak period data, substantial weather changes, usage data, and projected total cost for a current billing period. At step **1175**, the display/data collector unit **125** may to determine the cost-to-date estimated information, such as cost for the current billing period, projected total cost for the current billing period, and power usage benchmark profile(s). Thereafter, the generated data may be displayed for the consumer to view at step **1177**.

[**0085**] At step **1180**, the data center **195** may determine whether the consumer has reduced their power usage during a specified time, such as during a peak period that is in effect. If the consumer has actually reduced their power usage during the specified time, the data center **195** may transmit a cost savings notification to the display/data collector unit **125** at step **1185**. Upon receiving the cost savings notification, the display/data collector unit **125** may display a cost savings indicator at step **1190**. At step **1192**, the display/data collector unit **125** may determine actual savings to be credited to the consumer's projected total cost for the current billing period. Thereafter, at step **1195**, the display/data collector unit **125** may display an adjusted projected total cost for the billing for the consumer to view.

[**0086**] **FIG. 12** illustrates an exemplary classification **1200** of data communicated between the display/data collector unit **125** to a data center **195** to provide billing information to the consumer using the remote power meter monitoring system **105**. The display/data collector unit **125** may transmit control data **1205** to the data center **195**, such as (i) a unique identifier for the display/data collector unit **125** and (ii) a consumer number. As understood in the art, the control data also may include communication data based on industry communication standards. Additionally, the display/data collector unit **125** may transmit standard data **1210** to the data center **195**, such as (i) kilowatts per hour (KWh) used in specific time intervals (e.g., 5 minute intervals), which may further include a date and timestamp for each interval (e.g., power usage data), (ii) battery status for the display/data collector unit **125** and sensor terminal **120**, (iii) current power outage status, (iv) time power interrupted, and (v) local time.

[**0087**] The display/data collector unit **125** may be set-up to receive control data **1215** from the data center **195**, such as a unique identifier for the sensor terminal **120**, conversion factor, and local call-in number, if available. Moreover, the display/data collector unit **125** may receive standard data **1220** from the data center **195**, such as (i) indication of which message indicators to display and during particular times of the day, (ii) current billing cycle estimated total cost, (iii) changes in calibration of power usage message indicators, (iv) latest power usage benchmark data, and (v) local time. It is understood that the data communicated in the data packets are exemplary. Furthermore, the data packets may be communicated utilizing techniques known in the art over terrestrial and satellite communication networks. Upon receipt of the data packets, the display/data collector unit **125** may parse the data packets to extract the data **1220** using techniques known in the art.

[**0088**] **FIG. 13** is an exemplary block diagram **1300** for providing commercialization of the remote power meter monitoring system **105**. As shown, there exists three parties involved in the commercialization process including (i) a utility **1305**, (ii) consumer **1310**, and (iii) service center **1315**. These three parties are basically ones that are involved with marketing, sales, and use of the remote power meter monitoring system **105**. However, there may be other parties involved, including sales people, external marketing firms, etc. Additionally, the service center **1315** may be owned by, a subsidiary of or a licensee of the utility **1305**, for example.

[**0089**] Each of the parties benefits from the commercialization of the remote power meter monitoring system **105**. The utility **1305** collects a monthly fee or a portion thereof, sales fees for the optical sensor **115**, sensor terminal **120**, and display/data collector unit **125**, and potentially reduces demand on the power grid. The consumer **1310** potentially

saves money on a monthly basis by having up-to-date information (e.g., alerts) regarding pricing and power grid capacity, rebates, and projected monthly costs. The service center **1315** may collect a monthly fee and possibly sales fees for the sensor and display/data collector units **120** and **125**.

[**0090**] In one embodiment, a mutually beneficial relationship between the parties exists. Generally, the consumer **1310** receives power from the utility **1305** and communicates with the service center via the remote power meter monitoring system **105**, specifically via the display/data collector unit **125**. The service center **1315** may provide services for the utility **1305** to service the consumer and collect power usage fees. Alternatively, the service center **1315** may report power usage fees to the utility **1305** to collect from the consumer **1310**. Specifically, the utility **1305** provides power to the consumer **1310** at **1320** and the consumer pays the utility **1305** for the power usage at **1325**. The utility **1305** may provide the optical sensor **115**, sensor terminal **120** and display/data collector unit **125** to the consumer **1310** at **1330**. In another embodiment, a consumer list of the utility **1305** may be provided to the service center **1315** at **1340** to market the sensor unit and display/data collector unit **120** and **125**. The service center **1315** may provide the consumer **1310** with the optical sensor **115**, sensor terminal **120** and display/data collector unit **125**. The providing of the units **115**, **120**, and **125** may include selling, distributing, licensing, and installing, for example. In providing the units, incentive(s) at **1335** may be offered to the consumer **1310** by the utility **1305** and/or service center **1315**, where the incentive(s) may include forming an agreement for a discount on power usage (present and/or future), providing discounted or free units, providing a rebate on goods and/or services. According to the principles of the present invention, the consumer **1310** may install the optical sensor **115** and sensor terminal **120** at **1345** without the aid of a certified technician. Alternatively, a technician may install the optical sensor **115** and sensor terminal **120**. An incentive may be provided for self installation, including providing the optical sensor **115** and sensor terminal **120** for free or providing a rebate on a future power usage bill.

[**0091**] In operation, the service center **1315** may collect status information of the power grid and utility **1305**, including: up-to-date cost of electric energy, energy supply shortage (e.g., brownout and blackout), and power grid operational status (e.g., under repair, malfunction). The service center **1315** may transmit the status information in the form of a notification or alert to the consumer **1310** at **1350** and receive power usage information from the consumer at **1350**. The notification or alert may be displayed on the display/data collector unit **125**. Alternatively, other devices may be utilized to output the information to the consumer **1310**. The information from the consumer **1310** may be indicative of the consumer **1310** altering energy usage in response to the notification. The service center **1350** may provide data and/or money received from the consumer **1310** to the utility **1305** at **1355**. The data may include information indicative of altering energy usage in response to the notification or rebate due based on utilization of the remote power meter monitoring system **105**. Additionally, the utility may provide relevant data to the service center **1350**, which may be communicated to the consumer **1310**.

[**0092**] The previous description is of an embodiment for implementing the invention, and the scope of the invention should not necessarily be limited by this description. The scope of the present invention is instead defined by the following claims.

1-15. (canceled)

16. A power usage monitor for displaying power usage information at an on-site location, said power usage monitor comprising:

a receiver operable to receive data from a server associated with a power provider, the received data including at least one data element being indicative of status of a power network;

a display operable to display the at least one data element of the received data; and

a processor coupled to said receiver and said display, said processor having software executing thereon to:

receive the data from said receiver;

parse the data including the at least one data element being indicative of the status of the power network; and

communicate the at least one data element to said display to notify a user at the on-site location of the status of the power network.

17. The power usage monitor according to claim 16, wherein the on-site location includes at least one of the following: residential and commercial property.

18. The power usage monitor according to claim 16, wherein the at least one data element includes at least one of the following: local power shortage, peak power usage period in effect, brownout, rolling blackouts, and times of scheduled blackouts.

19. The power usage monitor according to claim 16, wherein the received data further includes at least one of the following: billing rate changes, alert notifications, message notifications, power usage benchmark data, total current billing cycle estimated cost, projected current monthly total power bill, and advertisements.

20. The power usage monitor according to claim 19, wherein the power usage benchmark data includes at least one of the following benchmarks for: day, month, and latest peak period.

21. The power usage monitor according to claim 16, further comprising at least one of the following: an LED and a tone generator for notifying the user of the received data.

22. The power usage monitor according to claim 21, wherein said processor communicates to the LED or tone generator upon a power network status being received to notify the user of the power network status.

23. A method for displaying power usage information to a consumer of an energy provider of a power network, said method comprising:

receiving data from the energy provider, the data including at least one data element being indicative of a status of the power network;

parsing the data including the at least one data element being indicative of the status of the power network; and

displaying the at least one data element to notify the consumer of the status of the power network.

24. The method according to claim 23, wherein the at least one data element includes at least one of the following: local power shortage, peak power usage period in effect, brown-out, rolling blackouts, and times of scheduled blackouts.

25. The method according to claim 23, wherein the received data further includes at least one of the following: billing rate changes, alert notifications, message notifications, power usage benchmark data, total current billing cycle estimated cost, projected current monthly total power bill, and advertisements.

26. The method according to claim 25, wherein the power usage benchmark data includes at least one of the following benchmarks for: day, month, and latest peak period.

27. A power usage monitor for displaying power usage information to a consumer of an energy provider of a power network, said power usage monitor comprising:

means for receiving data from the energy provider, the data including at least one data element being indicative of a status of the power network;

means for parsing the data including the at least one data element being indicative of the status of the power network status; and means for displaying the at least one data element to notify the consumer of the status of the power network.

28-75. (canceled)

76. The power usage monitor according to claim 16, further configured to communicate with a sensor terminal utilized to sense power usage as indicated by a power meter, store power usage data information received from the sensor terminal, and communicate the power usage data to a remote location to compute billing information.

77. The power usage monitor according to claim 16, wherein the received data further includes news.

78. The power usage monitor according to claim 16, wherein the received data further includes at least one of billing and payment information.

79. The power usage monitor according to claim 16, wherein said processor is further configured to determine and notify the user of inefficient or malfunctioning equipment at the on-site location.

80. The method according to claim 23, further comprising receiving sensed power usage data as indicated by a power meter, storing the received power usage data, and communicate the power usage data to a remote location to compute billing information.

81. The method according to claim 23, wherein said displaying further includes displaying news.

82. The method according to claim 23, wherein said receiving data includes receiving at least one of billing and payment information and said displaying includes displaying at least one of the billing and payment information.

83. The method according to claim 23, further comprising determining and notifying the user of inefficient or malfunctioning equipment at a location of the consumer.

* * * * *