(12) INTERNATIONAL APPLICATION PUBLISHED UNDER THE PATENT COOPERATION TREATY (PCT)

(19) World Intellectual Property Organization
International Bureau

(43) International Publication Date
29 March 2001 (29.03.2001)

PCT

(10) International Publication Number
WO 01/22702 A1

(51) International Patent Classification[7]: H04M 1/725, 1/66, 11/04

(21) International Application Number: PCT/US00/26191

(22) International Filing Date:
22 September 2000 (22.09.2000)

(25) Filing Language: English

(26) Publication Language: English

(30) Priority Data:
09/405,443 23 September 1999 (23.09.1999) US

(71) Applicant: **QUALCOMM INCORPORATED** [US/US]; 5775 Morehouse Drive, San Diego, CA 92121-1714 (US).

(72) Inventors: **CHMAYTELLI, Mazen**; 1752 Linwood Street #G, San Diego, CA 92110 (US). **KHAZAKA, Samir, K.**; 1621 Hotel Circle South #E209, San Diego, CA 92108 (US). **KIRBAS, Bilhan**; 242 Rosemont Street, Apt. C, La Jolla, CA 92037 (US).

(74) Agent: **WADSWORTH, Philip, R.**; Qualcomm Incorporated, 5775 Morehouse Drive, San Diego, CA 92121-1714 (US).

(81) Designated States *(national)*: AE, AG, AL, AM, AT, AU, AZ, BA, BB, BG, BR, BY, BZ, CA, CH, CN, CR, CU, CZ, DE, DK, DM, DZ, EE, ES, FI, GB, GD, GE, GH, GM, HR, HU, ID, IL, IN, IS, JP, KE, KG, KP, KR, KZ, LC, LK, LR, LS, LT, LU, LV, MA, MD, MG, MK, MN, MW, MX, MZ, NO, NZ, PL, PT, RO, RU, SD, SE, SG, SI, SK, SL, TJ, TM, TR, TT, TZ, UA, UG, UZ, VN, YU, ZA, ZW.

(84) Designated States *(regional)*: ARIPO patent (GH, GM, KE, LS, MW, MZ, SD, SL, SZ, TZ, UG, ZW), Eurasian patent (AM, AZ, BY, KG, KZ, MD, RU, TJ, TM), European patent (AT, BE, CH, CY, DE, DK, ES, FI, FR, GB, GR, IE, IT, LU, MC, NL, PT, SE), OAPI patent (BF, BJ, CF, CG, CI, CM, GA, GN, GW, ML, MR, NE, SN, TD, TG).

Published:
— *With international search report.*
— *Before the expiration of the time limit for amending the claims and to be republished in the event of receipt of amendments.*

[Continued on next page]

(54) Title: METHOD AND APPARATUS FOR A PERSONAL SAFETY ALARM WITHIN A WIRELESS PHONE

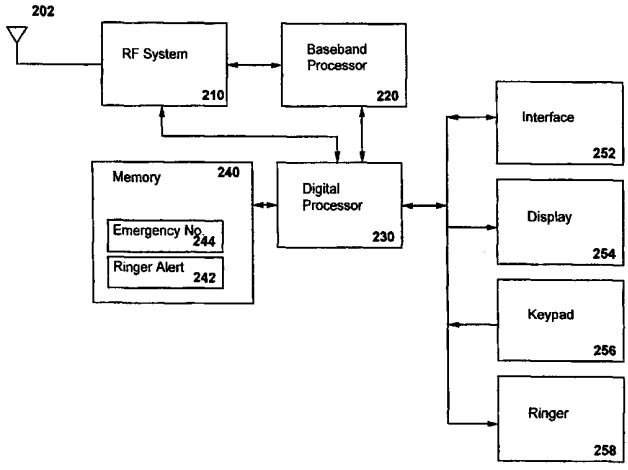

(57) Abstract: A personal safety alarm implemented within a wireless phone (200) emits a loud shrill sound using the phone ringer (258) and simultaneously initiates a connection to a predefined emergency phone number (244) when activated. If the wireless phone (200) is inactive when the user activates the alarm the phone will automatically activate, emit the audible alarm and initiate the emergency call. If the wireless phone (200) is within an established call at the time the user activates the alarm, the wireless phone (200) will activate the audible alarm, disconnect the present phone connection, and initiate the emergency call. The user is provided an indication once the connection to the emergency number is completed. The user is then able to silence the audible alarm with the knowledge that there is a connection to the emergency number. If desired, the user is able to reactivate the audible alarm while the link to the emergency number is active without disconnecting the call.

WO 01/22702 A1

For two-letter codes and other abbreviations, refer to the "Guidance Notes on Codes and Abbreviations" appearing at the beginning of each regular issue of the PCT Gazette.

METHOD AND APPARATUS FOR A PERSONAL SAFETY ALARM WITHIN A WIRELESS PHONE

BACKGROUND OF THE INVENTION

I. Field of the Invention

The present invention relates to wireless communication. More particularly, the present invention relates to a novel and improved personal safety alarm implemented within a wireless phone.

II. Description of the Related Art

Wireless phones provide remote users the opportunity to communicate with others. The wireless phone allows all wire based phone functions without the mobility limitations inherent in a wire based phone. Decreases in the cost of wireless phones and wireless phone service have made wireless phone service affordable for a large portion of the population. Moreover, service providers are constantly increasing the size of coverage areas such that wireless phone service is available almost anywhere.

A wireless phone integrates numerous complex circuits. An RF transceiver is used to provide the wireless communication link with base stations. The RF transceiver is comprised of a receiver and a transmitter. The receiver receives the RF transmission from the base station via an antenna interfaced to the mobile unit. The receiver amplifies, filters, and downconverts to basedband the received signal. The baseband signal is then routed to a baseband processing circuit. The baseband processing circuit demodulates the signal and conditions it for broadcast through a speaker to the user.

User input via keypad presses or voice input to a microphone is conditioned in the baseband processing circuit. The signal is modulated and routed to the transmitter. The transmitter takes baseband signals generated at the mobile unit and upconverts, filters, and amplifies the signal. The

upconverted RF signal is transmitted to the base station through the same antenna as used for the receiver.

Additional interface devices, such as a ringer and a display, are used to provide more specific information to the user. The number of additional interface devices is only limited by design constraints such as physical size and maximum power consumption.

As stated earlier, signals from the mobile phone interface to one or more base stations. The base stations in turn are linked to a base station controller. The base station controller provides the interface to the Public Switched Telephone Network (PSTN). The base station controller routes the land based phone signals to the appropriate base station for transmission to the wireless phone. Transmission from the base station to the wireless phone is designated the forward link. Transmission from the wireless phone to the base station is designated the reverse link. The base station receives the reverse link signal transmitted by the wireless phone and converts the signal to the signal format used by the PSTN. The base station controller routes the signal from the base station to the corresponding land based phone connection.

Because the wireless link does not affect the operation of the phone the user of a wireless phone is able to access all functions of a land line phone with the added convenience of portability. The portable nature of a wireless phone in conjunction with widely available phone service provides a level of safety for a wireless phone user. The wireless phone minimizes times when the inability to communicate creates risk or uncertainty. Users can make calls on the wireless phone to provide updates on their arrival times. Wireless phone users that experience a vehicle breakdown can conveniently call for road service without having to make a potentially dangerous trek along a busy roadway. In more serious personal safety situations, a wireless phone user can call for emergency assistance in the form of police, fire, or medical support. In the United States the readily available emergency phone number is 911. Other nations have similar emergency numbers.

Wireless phones are an important element in providing a degree of personal safety but certainly are not the only personal safety devices available.

Small personal alarms are available that can be carried or worn by the user. The personal alarms are small battery powered devices that emit an extremely loud alarm when activated by the user. The intent of the extremely loud audible alarm is to draw attention to the alarm user. The alarm is intended to have a deterrent effect on any would be aggressor. Pulling out a pin attached to a lanyard easily activates the alarm. This method of activation also minimizes unintentional deactivation by requiring the pin to be reinserted into the alarm device to reset the alarm.

Both the wireless phone and the personal alarm have associated disadvantages when used as emergency personal safety devices. The wireless phone can provide affirmative help in the form of police, fire, or medical personnel but requires a relatively high level of user interaction. The user must dial the emergency number and speak with someone on the phone in order to summon help. If the phone is initially in the inactive or OFF state the user must activate the phone and wait for it to acquire service in the wireless system before attempting a call. Additionally, if the user has the wireless phone configured such that a password must be entered at power-up before a call can be initiated, the user will need to enter the password prior to attempting a call. Each of these user requirements is detrimental to the user in an immediate emergency situation.

The major drawback of the personal alarm is the passive nature of an alarm. Although the personal alarm is easily activated and the alarm can serve as a deterrent, the personal alarm is incapable of actively summoning emergency assistance. The personal alarm relies solely on the loud audible alarm as a means for summoning assistance.

What is required is a device that is easily activated, acts as a personal alarm to immediately deter aggressors, and assists in actively summoning emergency help.

SUMMARY OF THE INVENTION

The present invention is a novel and improved personal safety alarm integrated into a wireless phone. The user can activate the alarm function by simultaneously pressing two buttons on the keypad for a predetermined amount of time. In an alternate embodiment additional hardware is implemented into the wireless phone such that the alarm can be initiated by pulling out a pin that can be attached to a lanyard. The wireless phone will emit a loud audible alarm when the alarm is activated. The wireless phone stores one or more alarm sounds in its non-volatile memory. When the alarm is activated the digital processor within the phone retrieves the sounds and plays them through an audio transducer within the wireless phone. The audio transducer emitting the alarm may be the phone ringer. In the alarm condition the ringer plays the alarm sound at the maximum volume level regardless of the level the user has set the ringer volume for ordinary incoming phone call alerts.

The user is able to activate the alarm regardless of the current state of the phone. If the phone is powered ON and in the idle state the phone immediately plays the alarm sound once the user activates the alarm. If the phone is currently in the OFF state the phone will automatically power up and immediately play the alarm sound. If the phone is powered ON and currently in an active phone call the phone will disconnect the current call and immediately play the alarm sound.

When the user activates the alarm the phone simultaneously attempts to connect to a predetermined emergency phone number in addition to playing the alarm sound. The phone first automatically resets itself to the idle state before attempting the phone call to the emergency number. If the phone is in the OFF state when the user activates the alarm, the phone powers up and acquires the current wireless communication system. The system may be based on AMPS, CDMA cellular, CDMA PCS or any commonly available wireless phone system that the phone is configured to support. The system acquisition is in accordance with the applicable specification for the communication system

that supports the particular wireless phone. The type of wireless phone service and the applicable specifications associated with acquiring service within the system are not factors limiting the present invention.

If the phone is powered ON and currently in an active phone call the phone will disconnect the current call and momentarily return to the idle state. The wireless phone may already be powered ON and in the idle state in which case the phone is immediately ready to make the automated attempt to connect to a predetermined emergency number.

Once the phone is in the idle state it attempts to connect with a predetermined emergency number. Once the phone has completed the emergency number connection it notifies the user that the connection has been completed. The notification may be accomplished by flashing an indicator on the phone or by changing the alarm sound that is currently being played. Once the user receives the call connection notification the user can silence the alarm sound with the knowledge that an emergency call operator will already be connected. The user is then able to talk on the phone as in any phone call and is able to terminate the phone call in the same manner as for an ordinary call. If required, the user can reactivate the alarm sound without disconnecting the emergency call.

BRIEF DESCRIPTION OF THE DRAWINGS

The features, objects, and advantages of the present invention will become more apparent from the detailed description set forth below when taken in conjunction with the drawings in which like reference characters identify correspondingly throughout and wherein:

FIG. 1A - 1B are flow charts illustrating the operation of the present invention; and

FIG. 2 is a block diagram of the hardware used to implement the present invention.

DETAILED DESCRIPTION OF THE PREFERRED EMBODIMENTS

The present invention is a personal alarm integrated within a wireless phone such that when the personal alarm is activated the wireless phone emits a loud audible alarm and simultaneously attempts to make a connection to a predetermined emergency phone number. The method followed by the invention is illustrated in the flow charts of FIGS. 1A and 1B.

Referring to FIG. 1A, the user initiates the personal alarm feature by simultaneously pressing two predetermined keys on the keyboard for greater than three seconds **102**. In the preferred embodiment two keys that are physically near each other are assigned to activate the alarm. The two keys could be the PWR key in conjunction with the # key. The two keys ideally are physically close to each other to enable operation with the thumb on one hand. However, any two keys or combination of keys could be used. Three seconds is an arbitrary number that represents an estimate of a reasonable alarm activation time while balancing concerns over false alarms. The three second number establishes a minimal time threshold to minimize false alarms. Any time threshold could be used with the knowledge that the shorter time thresholds produce the likelihood of greater number of false alarms. Longer thresholds are undesirable because they require too great of a sustained effort by the user.

An alternative embodiment implements the alarm activation in additional hardware not present on a typical wireless phone. In the alternative embodiment removing a designated pin from the wireless phone activates the alarm. This has the advantage of allowing for quick activation of the alarm. The activation of the alarm can be made even more convenient by attaching a lanyard to the pin to enable easy grasping and removal. As with any method of activation, the easier it is to activate the alarm the higher the probability of false alarm.

Once the user has activated the alarm the routine proceeds to state **104** where the routine checks to see if the phone is powered ON. The phone does

not need to be in the powered up state in order for the method of activation to be active. When the phone is in the OFF state, the phone can remain in an extremely low power monitoring state that only serves to monitor alarm activation. Of course, if the battery or other power supply is removed from the wireless phone any alarm monitoring will be inactive.

If the routine senses the phone is not powered up then the routine advances to state **106** where the phone automatically powers ON without any further user action. Once the phone is instructed to power ON the routine proceeds to state **120** described below.

If the phone is already powered up the routine proceeds to state **110**. In state **110** the routine checks to see if the phone is currently communicating in an active call. If a call is currently active the routine proceeds to state **112** where the currently active call is ended. The current active call is ended in order to make the communication link available for the emergency call. Since the alarm is activated in presumably emergency situations the user should not be required to interactively end any current phone calls prior to the routine initiating an emergency call. Once the current active call is ended the routine proceeds to state **120** described below.

If at state **110** the routine determines that the phone is not currently engaged in an active call, the routine advances to state **120**. At state **120** the routine instructs the phone to play the alarm sound. The alarm sound is played on an alert mechanism. In the preferred embodiment the alarm sound is a predetermined ringer tone played through the ringer at maximum volume. This implementation is preferred because all components are readily available in the wireless phone. The ringer is a highly efficient audio transducer typically used in the wireless phone for incoming call alerts. A special ringer tone for the alarm is saved in phone memory. Once the alarm is activated this tone is retrieved from memory and played through the ringer.

After the wireless phone begins to play the ringer tone at maximum volume **120,** the phone advances to state **122** where the phone initiates a call to a predetermined emergency number. In the United States the predetermined emergency number is 911. This emergency number is preprogrammed into

phones having a service provider located in the United States. The emergency number can be preprogrammed by the manufacturer or may alternatively be programmed by the service provider at the same time the phone number is programmed into the wireless phone.

The routine depicted in FIG. 1A proceeds from state **122** to point **125**. The flow chart utilizes point **125** to link the flow charts of FIG. 1A with FIG 1B. There is no other functionality associated with point **125**.

Referring to FIG. 1B, from point **125** the routine continues to state **130** where the wireless phone is instructed to continue playing the alert. If the phone is already playing the alert then there is no change. If the phone is not currently playing the alert when this state is reached, the phone begins playing the alert.

The routine next proceeds to state **134** to check to see if the user is attempting to silence the alert. The user will attempt to silence the alert once the wireless phone successfully connects with the emergency number. An inability to silence the alarm would make it difficult to communicate with an emergency number operator. A predetermined button on the keyboard is used to silence the ringer. Instructions on silencing the ringer may also be shown on the phone display. In the preferred embodiment, a hard key on the keypad showing an envelope, which is normally used to access a voice mailbox, is designated as the button used to silence the ringer.

If the user does not choose to silence the alarm the routine proceeds to state **136** to check to see if the user wishes to terminate the emergency call. Although a user may seek to terminate a valid emergency call prior to speaking with the operator, a false alarm is the most likely reason for terminating a call prior to speaking with an emergency number operator. The user can terminate the call in the same manner as one would end an ordinary call. However, the routine may integrate some affirmative means for verifying the user's intent to terminate the call. This can be accomplished by requiring the user to enter some predetermined password prior to terminating a call. Alternatively, the routine can be configured such that the user can terminate the call by following instructions that appear on the wireless phone display. The latter method may

be preferable over a password especially if someone has borrowed the phone and accidentally activated the alarm. If the user chooses to terminate the call the routine proceeds to state **138** where the call to the emergency number is ended. The phone then returns to a normal operating idle state as it would at the termination of an ordinary call. No affirmative user action is required if the user does not wish to terminate the call. The routine returns to state **130** to continue the loop that checks to see if the ringer should be silenced or if the call should be terminated.

If at state **134** the user chooses to silence the ringer the routine proceeds to state **140** where the ringer is shut off. However, the following state, state **142**, ensures the emergency call remains active even if the phone ringer is silenced. This allows the user to shut off the ringer alert in order to communicate with the emergency number operator.

The routine then proceeds to state **150** to check to see if the user wishes to reactivate the ringer alert. If the user chooses to reactivate the ringer alert the routine returns to state **130**. If the ringer has not chosen to reactivate the ringer alert the routine advances to state **160** to check if the user wishes to terminate the call. The user will eventually need to terminate the call. Even a valid emergency call will be terminated once assistance arrives.

If the user chooses to terminate the call the routine advances to state **162** where the call is terminated and the phone returns to an idle state where it is prepared to receive and initiate calls.

If the user has made no affirmative effort to terminate the call the routine returns to state **142**. The routine then repeats the loop where it checks to see if the ringer should be reactivated or if the user wishes to terminate the call.

The hardware required to implement the preferred embodiment is illustrated in the block diagram of FIG. 2. All of the elements to implement the preferred embodiment are already present within some existing wireless phones. FIG. 2 illustrates a block diagram of a wireless phone **200** implementing the preferred embodiment.

An antenna **202** serves as the transition between the wireless phone **200** hardware and electromagnetic radiation. The antenna **202** receives

electromagnetic radiation and transfers the signal to the RF system **210**. Similarly, the RF system **210** provides transmit signals to the antenna **202** to be broadcast to a base station.

In the receive signal path the RF system **210** filters and amplifies the received signal. The received signal is then downconverted to a baseband signal. This baseband signal is provided to the baseband processor **220**. A digital processor **230** works in conjunction with the baseband processor **220** to extract and format the information in the received signal. The digital processor then provides the extracted and formatted information to the appropriate hardware. The digital processor **230** processes incoming call alerts by retrieving a predetermined ringer sound from memory **240** and playing it on the ringer **258**. Textual information is shown on the phone display **254**. Other information, such as voice signals, is sent to its appropriate interface device **252**. Received voice signals are sent to a speaker to be played to the user.

In the transmit path, user input is received by the phone through the keypad **256** or interface device **252** such as a microphone. The digital processor **230** conditions and formats the input signals in conjunction with the baseband processor **220**. The baseband signals are then provided to the RF system **210** where the baseband signals are upconverted to the transmit frequency and sent to the antenna **202** to be broadcast.

In the present invention the user activates the alarm by simultaneously pressing two predetermined keys on the keypad **256**. In an alternate embodiment the user extracts a pin from the wireless phone to activate the alarm.

The digital processor **230** monitors the keypad **256** to verify activation of the alarm. Since the alarm can be activated when the phone is in the OFF state the digital processor **230** must always remain in a low power active state even when the phone is OFF in order to continually monitor the keypad **256**. If the wireless phone **200** is in the OFF state when the alarm is activated, the digital processor **230** initiates an automatic power up.

Once the digital processor **230** has determined that the alarm has been activated the digital processor **230** retrieves the emergency ringer tone **242** from memory **240** and plays it at maximum volume on the ringer **258**. The emergency ringer tone **242** represents a special ringer tone that the user cannot select as an optional ringer alert sound. Its only function is to serve as the alarm sound in an emergency situation. At least one emergency ringer tone **242** must be saved in memory **240**. A second emergency ringer tone may be used to provide a notification to the user that the connection to the emergency number is complete.

At the same time as that the emergency ringer tone **242** is played on the ringer **258**, the digital processor **230** retrieves the emergency phone number **244** from memory **240** and attempts to make a connection to that number. As an example, in the United States the emergency number is 911. The emergency phone number **244** needs to be saved in an area of non-volatile memory such that the number is not lost if the phone loses power for any significant portion of time. Additionally, it is preferable to save the emergency phone number in rewritable memory such that the number can be updated if the phone is changed to a service area having a different emergency phone number.

The wireless phone **200** attempts the connection to the emergency phone number **244** using the standard phone hardware. The phone notifies the user once the phone completes the connection to the emergency number. The notification can be in the form of an audio alert or a visual alert shown on the phone display **254**. The audio alert can be a change in the sound of the emergency ringer tone **242**. The phone must store at least two emergency ringer tones in order for this method of alert to be used. The phone plays one emergency ringer tone immediately upon activation of the alarm and switches to a second emergency ringer tone once the connection to the emergency phone number is complete. The notification allows the user to silence the ringer with the knowledge that the emergency phone call is connected. If a visual alert is used the phone can either flash the display **254** or provide text on the display **254** that indicates the emergency phone number connection is complete.

Once the user is notified of the connection to the emergency phone number the user can silence the alarm and talk with the emergency number operator. The phone call then proceeds as in the case of an ordinary phone call.

The previous description of the preferred embodiments is provided to enable any person skilled in the art to make or use the present invention. The various modifications to these embodiments will be readily apparent to those skilled in the art, and the generic principles defined herein may be applied to other embodiments without the use of the inventive faculty. Thus, the present invention is not intended to be limited to the embodiments shown herein but is to be accorded the widest scope consistent with the principles and novel features disclosed herein.

WE CLAIM:

CLAIMS

1. A personal alarm comprising:

a wireless phone;

a digital processor;

a memory device containing a predetermined emergency phone number and a predetermined emergency alert sound;

an audio transducer; and

means for activating the personal alarm;

wherein the digital processor is constructed to retrieve the predetermined emergency alert sound from memory and to play it on the audio transducer and to direct the wireless phone to make a phone call to the predetermined emergency phone number when the personal alarm is activated.

2. The personal alarm of claim 1 wherein the personal alarm is constructed to be activated by simultaneously depressing two predetermined keys on a keypad of the wireless phone for a predetermined period of time.

3. The personal alarm of claim 1 wherein the personal alarm is constructed to be activated by removing a pin inserted into the wireless phone.

4. The personal alarm of claim 1 further comprising an alert constructed to notify the user when the phone call to the predetermined emergency phone number is connected.

5. The personal alarm of claim 4 wherein the alert comprises a visual notification shown on a wireless phone display.

6. The personal alarm of claim 4 wherein the alert comprises a change of the sound played on the audio transducer from the predetermined emergency alert sound to a second emergency alert sound stored in memory.

7. A method of implementing a personal alarm within a wireless phone comprising the steps of:

a) monitoring the wireless phone for an alarm activation;

b) playing an audible alert upon the alarm activation; and

c) initiating a call on a wireless phone system to a predetermined emergency phone number upon alarm activation.

8. The method of claim 7 further comprising an additional step performed between steps a) and b) of:

directing the wireless phone to power on upon alarm activation if the wireless phone is presently in the power down state.

9. The method of claim 7 wherein the alarm activation comprises pressing two predetermined keys on a wireless phone keypad for a predetermined period of time.

10. The method of claim 7 wherein the predetermined emergency phone number is 911.

11. The method of claim 7 further comprising an additional step performed between steps b) and c) of:

terminating any active phone call upon alarm activation.

12. The method of claim 7 further comprising the additional step of:

notifying the user when a connection to the emergency phone number is complete.

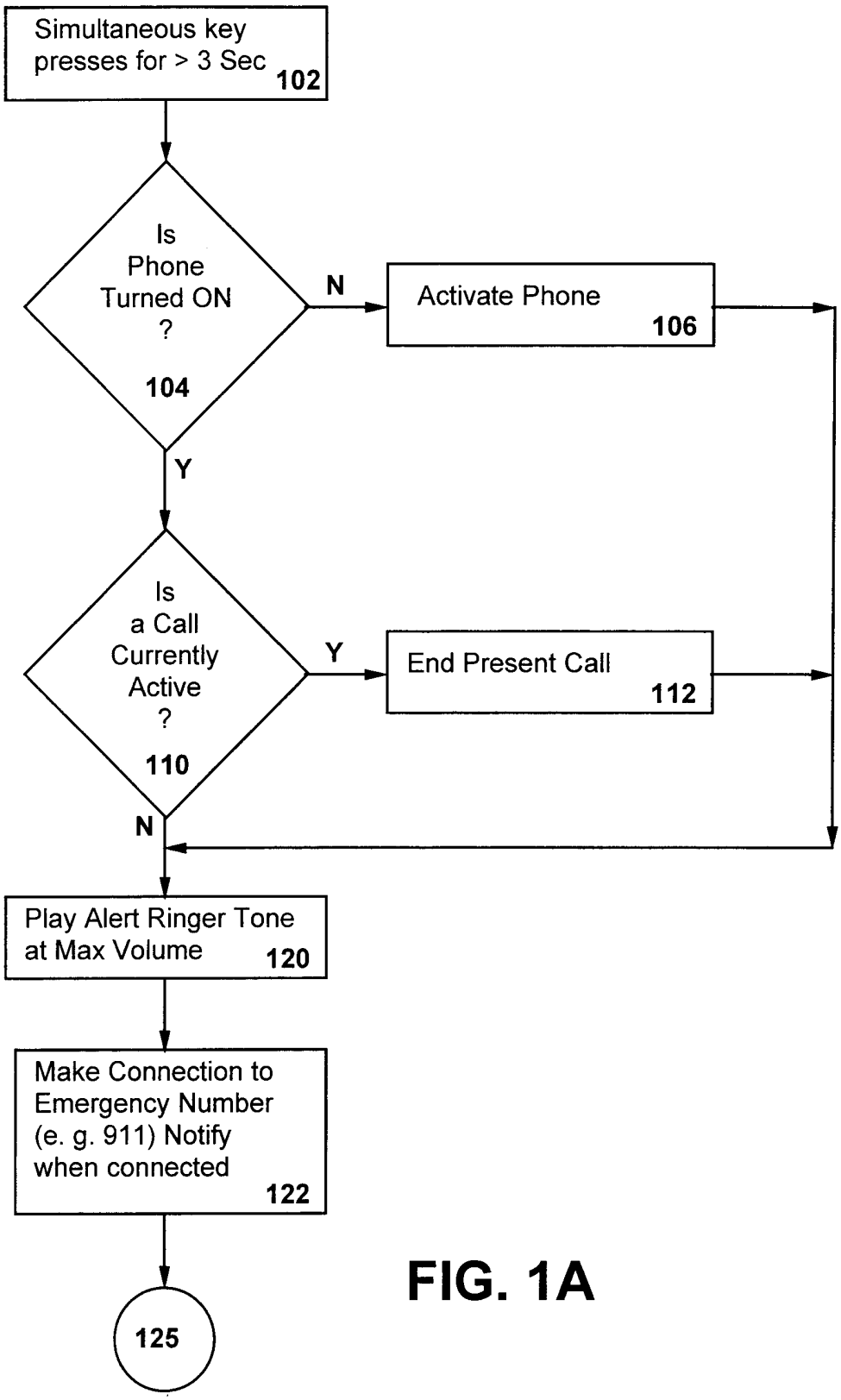
Simultaneous key presses for > 3 Sec
102
Is Phone Turned ON ?
104
N
Activate Phone
106
Y
Is a Call Currently Active ?
110
Y
End Present Call
112
N
Play Alert Ringer Tone at Max Volume
120
Make Connection to Emergency Number (e. g. 911) Notify when connected
122
125

FIG. 1A

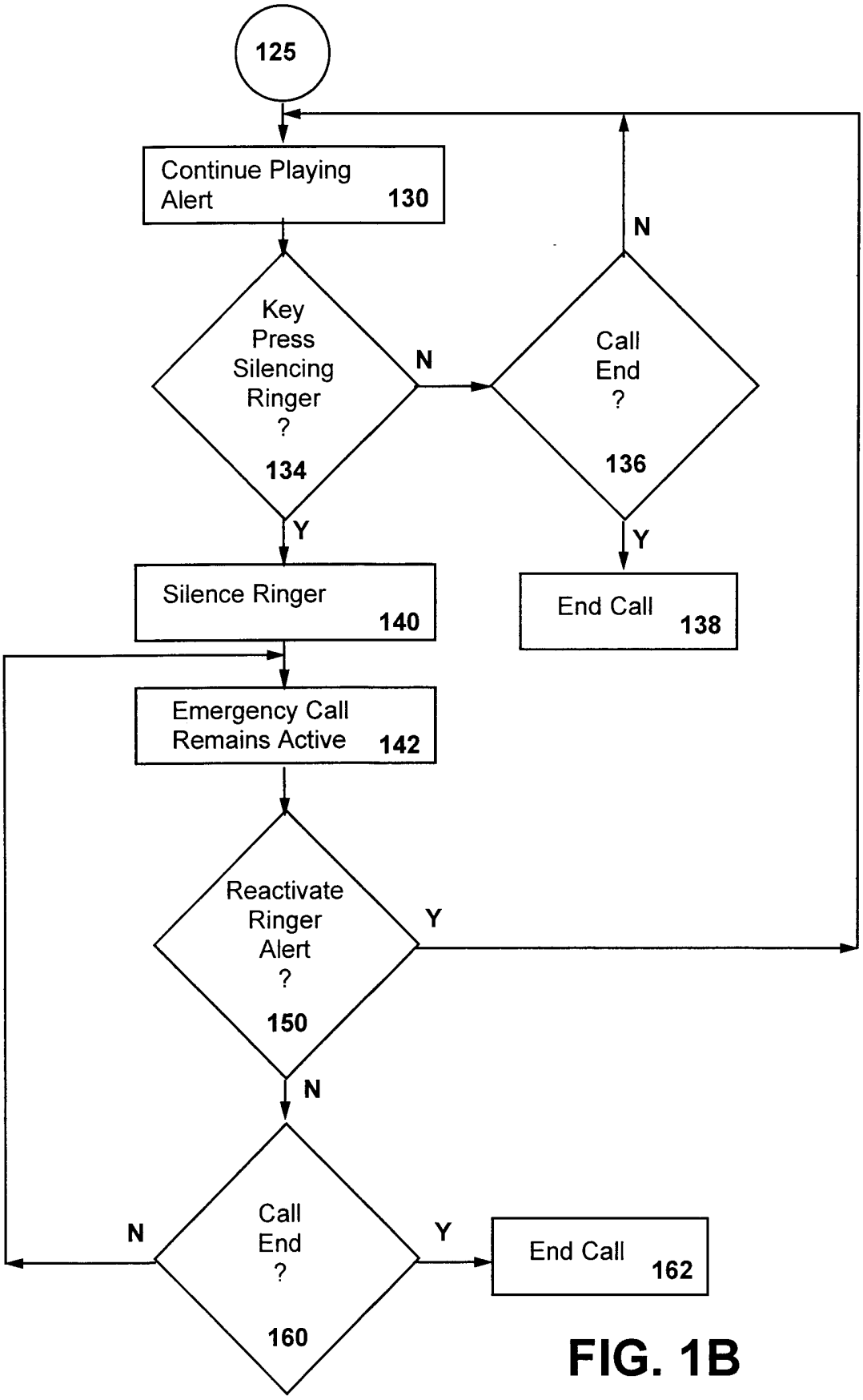
125
Continue Playing Alert 130
Key Press Silencing Ringer ? 134
N
Call End ? 136
N
Y
Y
Silence Ringer 140
End Call 138
Emergency Call Remains Active 142
Reactivate Ringer Alert ? 150
Y
N
Call End ? 160
N
Y
End Call 162

FIG. 1B

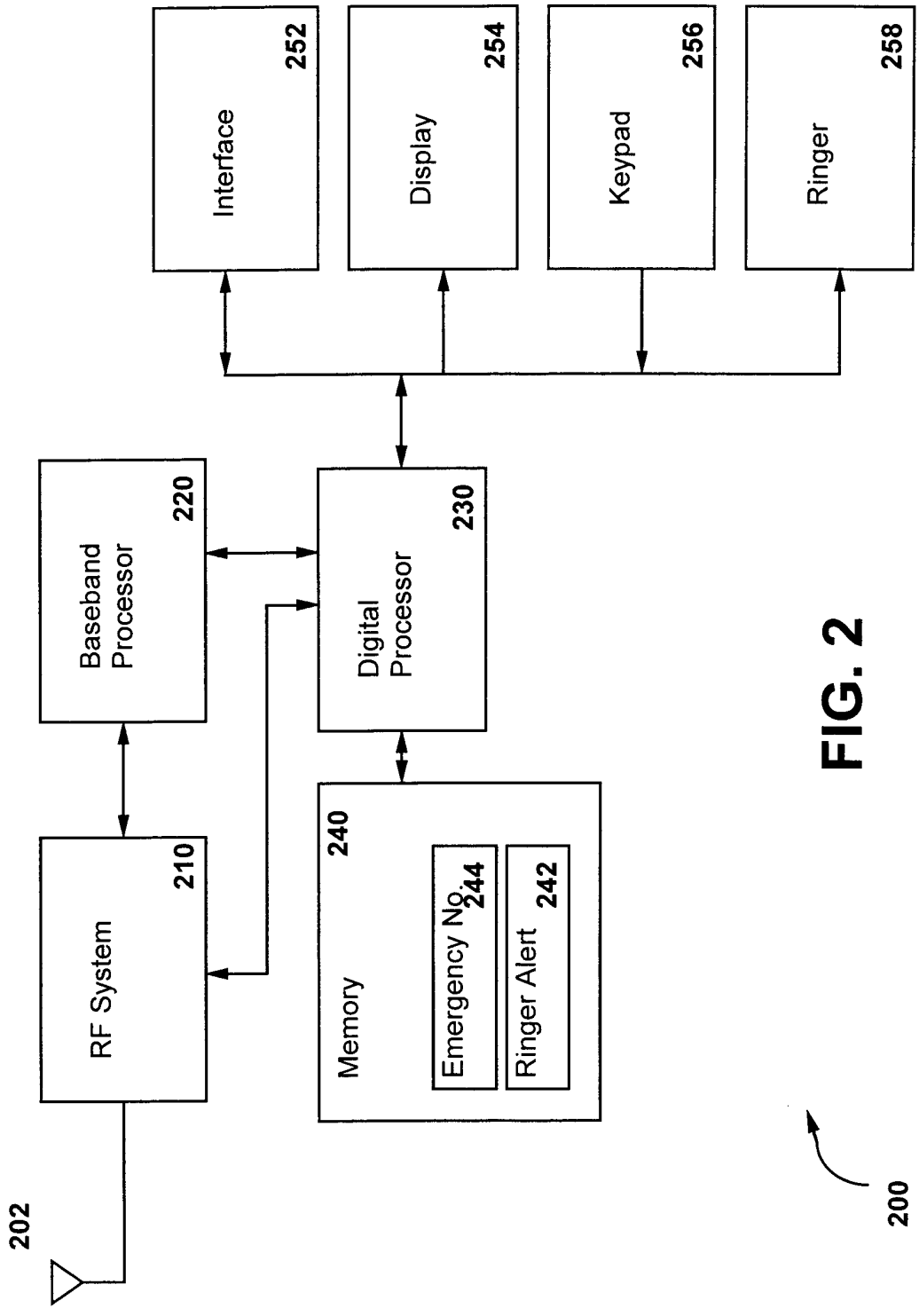
Interface
252
Display
254
Keypad
256
Ringer
258
Baseband Processor
220
Digital Processor
230
RF System
210
Memory
240
Emergency No.
244
Ringer Alert
242
202
200

FIG. 2

INTERNATIONAL SEARCH REPORT

In. ational Application No
PCT/US 00/26191

A. CLASSIFICATION OF SUBJECT MATTER
IPC 7 H04M1/725 H04M1/66 H04M11/04

According to International Patent Classification (IPC) or to both national classification and IPC

B. FIELDS SEARCHED

Minimum documentation searched (classification system followed by classification symbols)
IPC 7 H04M

Documentation searched other than minimum documentation to the extent that such documents are included in the fields searched

Electronic data base consulted during the international search (name of data base and, where practical, search terms used)
EPO-Internal

C. DOCUMENTS CONSIDERED TO BE RELEVANT

Category °	Citation of document, with indication, where appropriate, of the relevant passages	Relevant to claim No.
X	EP 0 920 225 A (MATSUSHITA ELECTRIC IND CO LTD) 2 June 1999 (1999-06-02)	1,3,7
Y	column 1, line 45 -column 2, line 24	4,5,10, 12
A	column 2, line 33 -column 3, line 5 column 3, line 44 - line 56 column 4, line 50 -column 6, line 10 column 7, line 8 - line 58 figures 1,2,5	2,9

Y	US 5 894 591 A (TAMAYO) 13 April 1999 (1999-04-13)	4,5,10, 12
A	abstract column 2, line 31 - line 64 column 4, line 5 - line 29 figures 3-6	1,2,7

	-/--	

[X] Further documents are listed in the continuation of box C.

[X] Patent family members are listed in annex.

° Special categories of cited documents :

"A" document defining the general state of the art which is not considered to be of particular relevance

"E" earlier document but published on or after the international filing date

"L" document which may throw doubts on priority claim(s) or which is cited to establish the publication date of another citation or other special reason (as specified)

"O" document referring to an oral disclosure, use, exhibition or other means

"P" document published prior to the international filing date but later than the priority date claimed

"T" later document published after the international filing date or priority date and not in conflict with the application but cited to understand the principle or theory underlying the invention

"X" document of particular relevance; the claimed invention cannot be considered novel or cannot be considered to involve an inventive step when the document is taken alone

"Y" document of particular relevance; the claimed invention cannot be considered to involve an inventive step when the document is combined with one or more other such documents, such combination being obvious to a person skilled in the art.

"&" document member of the same patent family

Date of the actual completion of the international search	Date of mailing of the international search report
26 February 2001	05/03/2001

Name and mailing address of the ISA	Authorized officer
European Patent Office, P.B. 5818 Patentlaan 2 NL – 2280 HV Rijswijk Tel. (+31-70) 340-2040, Tx. 31 651 epo nl, Fax: (+31-70) 340-3016	Fragua, M

1

Form PCT/ISA/210 (second sheet) (July 1992)

INTERNATIONAL SEARCH REPORT

In. ational Application No
PCT/US 00/26191

C.(Continuation) DOCUMENTS CONSIDERED TO BE RELEVANT

Category °	Citation of document, with indication,where appropriate, of the relevant passages	Relevant to claim No.
A	US 5 305 370 A (KEARNS ET AL) 19 April 1994 (1994-04-19) abstract column 3, line 7 - line 48 column 4, line 3 - line 6 column 5, line 15 - line 56 figures 1,3	1,2,7,9, 10
A	US 5 555 286 A (TENDLER) 10 September 1996 (1996-09-10) abstract column 2, line 20 - line 40 column 2, line 60 - line 67 column 3, line 60 -column 4, line 4 column 5, line 50 -column 6, line 12 figure 1	1,2,7,9, 10

1

Form PCT/ISA/210 (continuation of second sheet) (July 1992)

INTERNATIONAL SEARCH REPORT

Information on patent family members

International Application No
PCT/US 00/26191

Patent document cited in search report	Publication date	Patent family member(s)	Publication date
EP 0920225 A	02-06-1999	JP 11164057 A	18-06-1999
		CN 1218360 A	02-06-1999
US 5894591 A	13-04-1999	NONE	
US 5305370 A	19-04-1994	NONE	
US 5555286 A	10-09-1996	WO 9806229 A	12-02-1998
		AU 7008396 A	25-02-1998