Dec. 4, 1934.

O. H. FRANK

1,983,449

SWITCH BOX

Filed Sept. 10, 1931

3 Sheets-Sheet 1

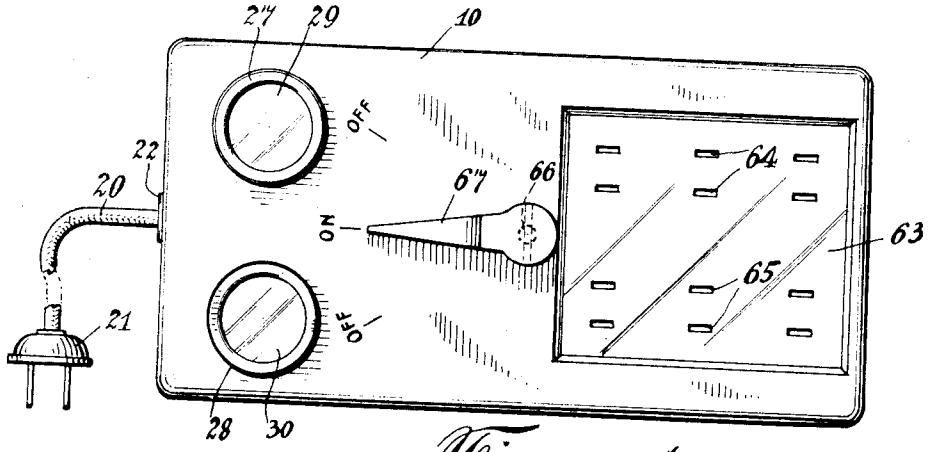

Figure 1.

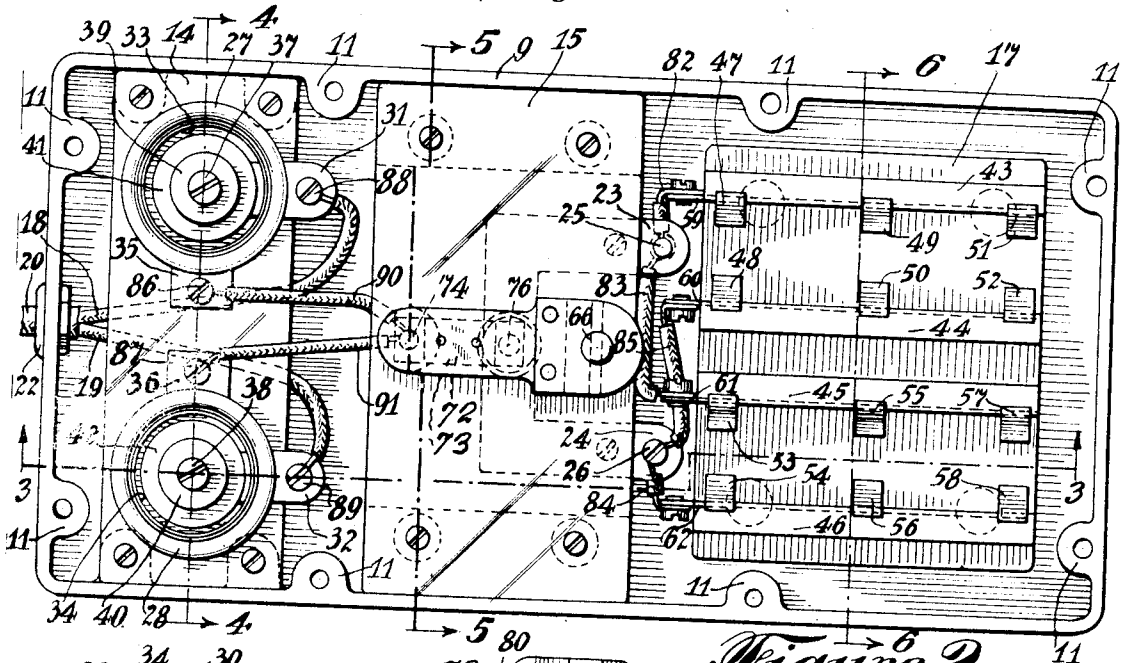

Figure 2.

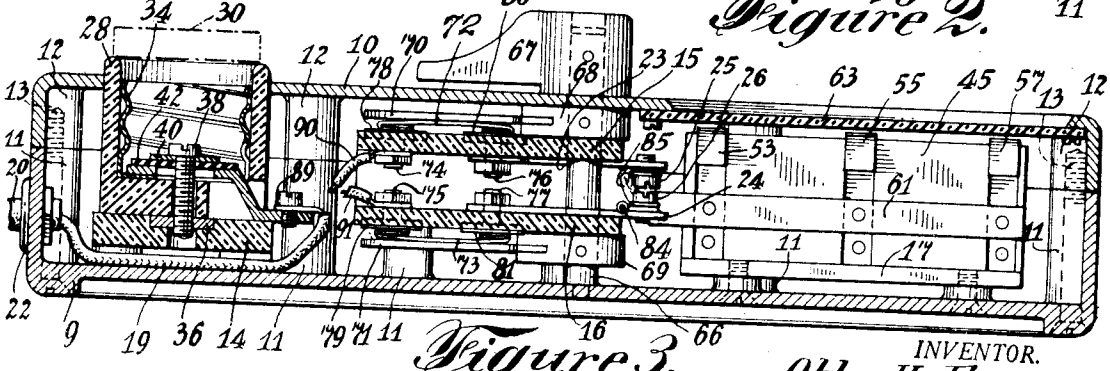

Figure 3.

INVENTOR.
Otto H. Frank
BY
his ATTORNEY

Dec. 4, 1934. O. H. FRANK 1,983,449

SWITCH BOX

Filed Sept. 10, 1931 3 Sheets-Sheet 2

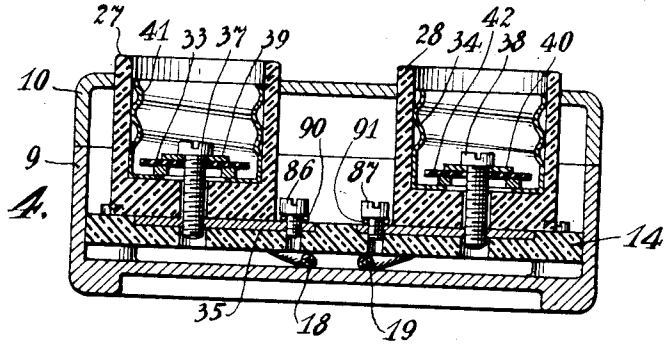

Figure 4.

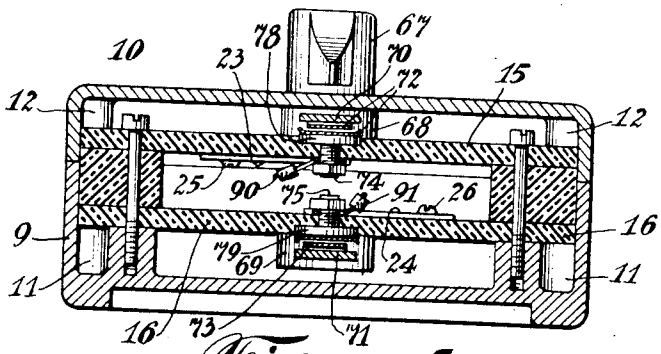

Figure 5.

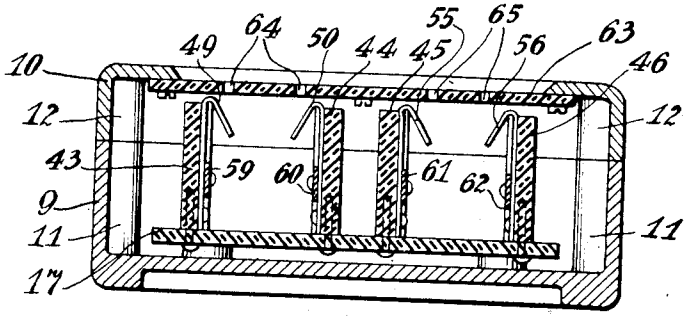

Figure 6.

INVENTOR.
Otto H. Frank
BY
his ATTORNEY

Dec. 4, 1934. O. H. FRANK 1,983,449

SWITCH BOX

Filed Sept. 10, 1931 3 Sheets-Sheet 3

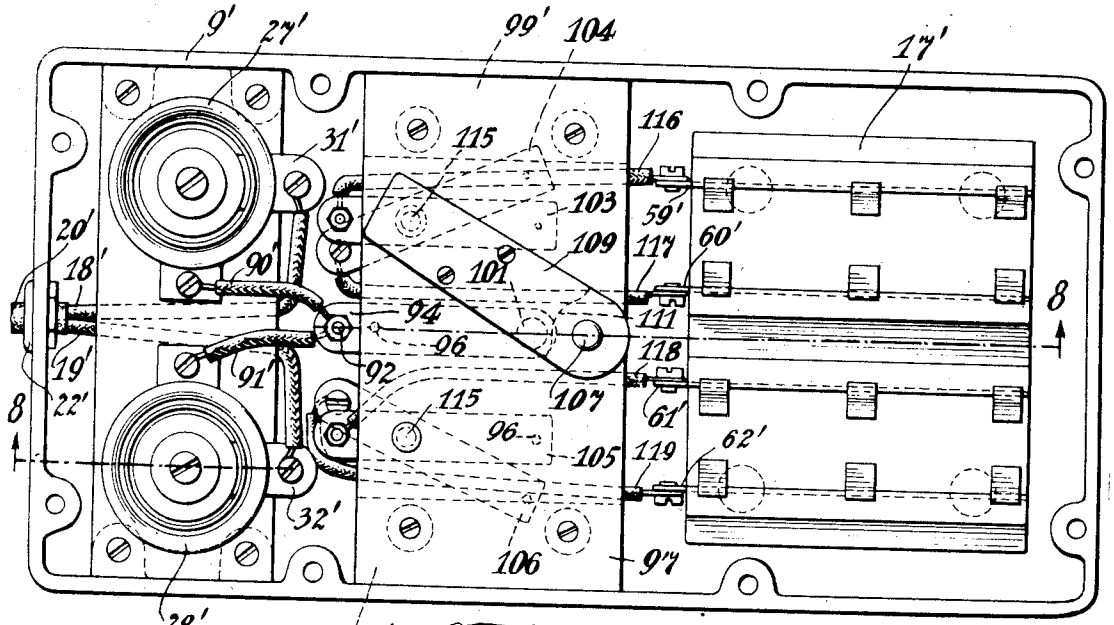

Figure 7.

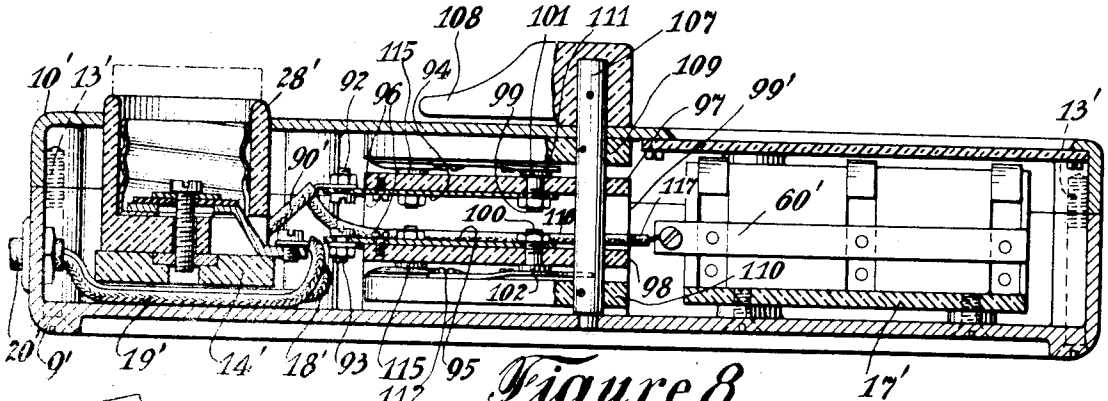

Figure 8.

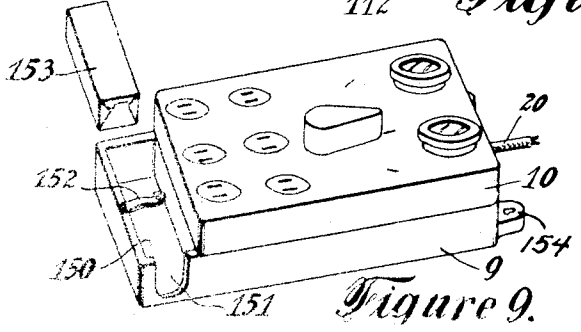

Figure 9.

INVENTOR.
Otto H. Frank
BY
L. Gerstad Hauder
his ATTORNEY

Patented Dec. 4, 1934

1,983,449

UNITED STATES PATENT OFFICE

1,983,449

SWITCH BOX

Otto H. Frank, Brooklyn, N. Y.

Application September 10, 1931, Serial No. 562,001

2 Claims. (Cl. 200—115.5)

This invention relates to switch boxes and more particularly to a switch box containing fuses and plug-in sockets.

An object of the invention is to provide a neat, compact, safe and simple structure such as may be carried loosely at the end of a cord conductor, and which may preferably be laid flat upon a table, and which will serve as a fused switch-controlled junction box for the easy, convenient and releasable plugging-in of any desired number of electrical appliances in parallel onto the conductor circuit for simultaneous operation.

A further object is to so construct the device that the fuses may be visible at all times and so that the fuses may be quickly and easily removed and replaced whenever required.

A further object is to so construct the device that its various parts are easily accessible for inspection and for the making of repairs.

A further object is to so construct the device that it may include a conveniently arranged receptacle for containing a supply of renewal fuses.

A further object is to so construct the device that it may provide two separate banks of plug-in sockets selectively controlled by a conveniently arranged switch handle.

Other objects and aims of the invention, more or less specific than those referred to above, will be in part obvious and in part pointed out in the course of the following description of the elements, combinations, arrangements of parts and applications of principles constituting the invention; and the scope of protection contemplated will be indicated in the appended claims.

In the accompanying drawings which are to be taken as a part of this specification, and in which I have shown merely a preferred form of embodiment of the invention:—

Figure 1 is a plan view of one form of my improved switch box with its cover in place.

Figure 2 is a plan view of the device, cover being omitted.

Figure 3 is a longitudinal section on the line 3—3 of Figure 2, looking in the direction indicated by the arrows.

Figure 4 is a cross section on the line 4—4 of Figure 2, looking in the direction indicated by the arrows.

Figure 5 is a section on the line 5—5 of Figure 2, looking in the direction indicated by the arrows.

Figure 6 is a section on the line 6—6 of Figure 2, looking in the direction indicated by the arrows.

Figure 7 is a plan view of another form of my device, the cover not being shown.

Figure 8 is a longitudinal section on the line 8—8 of Figure 7, looking in the direction indicated by the arrows, and

Figure 9 is a perspective view of a modified form of the device.

Referring to the drawings for describing in detail the exemplary structures illustrated therein, and referring first particularly to the form shown in Figures 1 to 6, the reference character 9 indicates a casing having the general form of a longitudinal box and provided with a detachable cover 10. This casing serves as a container for all the other parts.

The casing and its cover may be made of any suitable material, such as molded bakelite or the like and lugs as 11, 11, 12, 12, and screws 13, 13 may be employed to hold the cover securely in place. Molded metal may be used.

Housed within the casing 9 and extending cross-wise thereof are four shelves 14, 15, 16 and 17, each made of insulating material, the shelf 15 being located directly above the shelf 16, as shown in Figure 3. These four shelves are for the purpose of supporting other parts.

Two cord conductors are shown at 18, 19 and are united into a double cord 20, the latter terminating in a double plug 21, shown in Figure 1.

The double cord 20 extends through an eye 22, of insulating material, into the casing.

Secured to the underside of the shelf 15 is a conducting plate 23 and a similar conducting plate 24 is secured to the upper side of the shelf 16.

The shelf 14 carries two fuse sockets 27, 28, for holding fuses 29, 30 detachably fitted thereinto. The fuse sockets 27, 28 are exactly alike, each having the cross section shown in Figure 3.

The fuse sockets are provided with terminal strips 31, 32, connected with screw shells 33, 34, and also have terminal strips 35, 36, to which are secured contact screws 37, 38. These contact screws engage metallic washers 39, 40, which are insulated from the terminal strips 31 and 32 by means of washers 41, 42 of insulating material.

Binding screws 86 and 87 engage the terminal strips 35 and 36 respectively. To the terminal strips 31 and 32 are secured the cord conductors 18 and 19 respectively as by the binding screws 88 and 89.

To the terminal strips 35 and 36 are secured

wires 90 and 91 respectively as by the binding screws 86 and 87.

Mounted upon the shelf 17 and extending upwardly therefrom are plates 43, 44, 45, 46 of insulating material, in this instance four in number.

Carried by these plates are a number of contact fingers, numbered 47 to 58, arranged in pairs as shown. These contact fingers have the form of leaf springs.

For the purpose of energizing the contact fingers I use metallic connecting strips 59, 60, 61 and 62, arranged in pairs as may be understood from Figure 6.

The cover 10 carries a socket plate 63, made of insulating material and provided with plug holes 64, 65, arranged in pairs as may be understood from Figure 1.

These plug holes are for the insertion of double plugs, like the one shown at 21 in Figure 1, and thus making certain connections as hereinafter more fully explained.

A shaft 66 extends through holes in the shelves 15 and 16, and is journaled to turn. This shaft extends upwardly through a hole in the cover 10, and is provided with a pointer 67 which serves also as a handle, as may be understood from Figure 1.

The top 10 is provided with legends Off, On, Off, as indicated in Figure 1. These legends co-act with pointer 67 for the purpose of indicating the condition of the switch mechanism.

Mounted rigidly upon the shaft 66 are two blade holders 68, 69, carrying blades 70, 71. These blades carry two spring contact shoes 72, 73, each made of a leaf spring with its ends bent backwardly and serving as contact feet, of the form indicated in Figures 3 and 5.

Mounted upon the shelves 15 and 16, and extending therethrough, are four binding posts 74, 75, 76, 77, carrying contact plates 78, 79, 80, 81. The binding posts 76 and 77 are connected respectively with the conducting plates 23 and 24, while the binding posts 74, 75 are connected to the terminal strips 35 and 36 by the wires 90 and 91.

These parts are so arranged that when the pointer 67 is in its middle position, indicated by the legend On, as indicated in Figures 1 and 5, the contact shoe 72 extends from the contact plate 78 to the contact plate 80, and similarly the contact shoe 73 extends from the contact plate 79 to the contact plate 81.

When, however, the pointer 67 occupies either of its two positions indicated by the legends Off, the two contact shoes 72 and 73 have no connection with the contact plates 78 and 79 and no current can flow to the contact fingers 47 to 58 in the plug receptacles.

Secured to the plates 23 and 24 respectively are binding screws 25 and 26. Leading from the binding screw 25 are wires 82 and 83 which are connected to the terminal strips 59 and 61 respectively. In a like manner wires 84 and 85 leading from the binding screw 26 are connected to the terminal strips 60 and 62. Thus the contact fingers connected to the strips 59 and 61 will be of like polarity while those connected to the stops 60 and 62 will be of like polarity but of opposite polarity to the former.

The operation of the device as shown in Figs. 1 to 6 is as follows:

When the plug 21 is connected to a source of current supply the current flowing through the double cord 20 will be distributed first through the fuses 29, 30 and through the connections leading therefrom to the binding posts 74, 75.

If the pointer 67 is in the "On" position connection will be made through the contact shoes 72, 73 and conducting plates 23, 24 to the contact fingers 47 to 58 as described. Various electrical appliances may be plugged-in in the usual manner into the holes 64, 65 and complete the circuit between the contact fingers of opposite polarity.

Movement of the pointer or handle 67 into either of its "Off" positions will cut off the supply of current to all of the appliances plugged-in on the device.

Replacement of a fuse may be easily and conveniently accomplished in view of the incorporation of the fuse sockets within the switch box structure and recourse to the main fuse box is rendered unnecessary.

In the modification shown in Figures 7 and 8 a different wiring system has been employed in order to obtain two "On" positions and one "Off" position as distinguished from the one "On" position and two "Off" positions described in connection with Figures 1 to 6 inclusive, thereby also to provide for the independent control of two separate banks of plug-in sockets.

The cord conductors 18' and 19' leading to the fuse sockets 27' and 28' are attached, as in the previously described embodiment, to terminal strips 31', 32' connected with the socket shells and the current after passing through the fuses is conducted by means of the wires 90' and 91' to terminal screws 92, 93. The connections from the double cord 20' through the fuses may therefore be precisely similar to those described in connection with the embodiment illustrated in Figures 1 to 6 inclusive.

The terminal screws 92, 93 are connected respectively to upper and lower bus bars 94, 95 secured, as by the screw 96, to upper and lower shelves 97, 98 of insulating material.

The shelves 97, 98 may be supported in the box by side insulating members 99'. Extending through the shelves 97, 98 and the bus bars 94, 95 are binding posts 99, 100 carrying contact plates 101, 102.

Secured to the shelves 97, 98 on either side of the bus bars are four conducting plates 103, 104, 105, 106 each carrying a contact plate 115.

Rotatably mounted in the shelves 97, 98 and extending through the cover of the switch box is a shaft 107. The shaft is provided with a pointer 108 which also serves as a handle, and the pointer may co-act with a center legend "Off" and side legends "On" (not shown) to indicate the condition of the switch mechanism.

Mounted on the shaft 107 are two blade holders 109, 110 carrying blades 111, 112 which are adapted to frictionally engage the contact plates 101, 102, 115 as the pointer is moved from one position to another.

The right hand end of the box as viewed in Figure 7 is of similar construction to the embodiment shown in Figures 1 to 6 inclusive, and is provided with a shelf 17' carrying similar contact fingers arranged in pairs as plug receptacles and energized by the metallic connecting strips or bus bars 59', 60', 61' and 62'.

The bus bars 59', 60', 61', 62' are connected to the conducting plates 103, 104, 105 and 106 respectively by wires 116, 117, 118, 119 as will be seen from Figure 7.

The operation of the embodiment shown in Figures 7 and 8 is distinguished from that in Figures 1 to 6 inclusive inasmuch as movement of

the pointer 108 to the central position will break connection between the blades 111, 112 and the contact plates 115 and current will cease to flow to the contact fingers.

Upon movement of the pointer and therefore the blades 111, 112 to frictionally engage the contact plates 115 on either side of the center the contact fingers on the corresponding side will be energized and adapted to operate any appliances plugged-in thereon, the appliances plugged-in on the opposite side being meanwhile dead.

From the foregoing it will be apparent that a compact and economical structure has been provided whereby several electrical appliances may be operated from a single unit and disconnected individually or as a whole from the source of current supply.

By throwing the pointer to one side or the other the operator may selectively operate either group or bank of appliances at will according to which bank of plug-in sockets is brought into circuit by the particular position of the pointer.

In Figure 9 a further modification is shown wherein the base of the casing 9 is lengthened to provide a chamber 150. One end of the chamber as at 151 may be cut away to form a finger-hole and a clip 152 may be secured across the chamber midway between its ends.

A suitable form of spare fuse box 153 may be provided to contain two or more fuses, so that in the event of fuse failure a replacement may quickly be made. The clip 152 is easily movable to facilitate removal of the container 153.

In the modification Fig. 9 the casing 9 is shown as having a hanger extension 154 thereon by which if desired, the casing may be hung upon a suitable wall peg as will be readily understood.

As many changes could be made in this construction without departing from the scope of the invention as defined in the following claims, it is intended that all matter contained in the above description, or shown in the accompanying drawings, shall be interpreted as illustrative only and not in a limiting sense.

Having thus described my invention, what I claim as new and desire to secure by Letters Patent is:—

1. A switch box having a plurality of plug-in sockets, means to lead current into said box, a pair of spaced shelves in the box, contact plates secured to the shelves on opposite sides thereof and connected to said means, conducting members secured to said shelves on opposite sides thereof and spaced from the contact plates, contact fingers in said plug-in sockets, bus bar members connecting the contact fingers to said conducting members, said fingers being connected in pairs of opposite polarity, a rotatable shaft extending through said shelves and projecting from the box, a pointer on the projecting end of the shaft, and contact blades secured to the shaft and rotatable therewith into engagement with the conducting members and the contact plates to energize said contact fingers.

2. A switch box having a plug-in socket, means to lead current into said box, a pair of spaced shelves in the box, contact plates secured to the shelves on opposite sides thereof and connected to said means, conducting members secured to said shelves on opposite sides thereof and spaced from the contact plates, opposite contacts in said plug-in socket connected with the conducting members respectively, a rotatable shaft extending through said shelves and projecting from the box, a handle on the projecting end of the shaft, and contact plates secured to the shaft and rotatable therewith into engagement with the conducting members and with the contact plates to energize the contacts in the plug-in socket.

OTTO H. FRANK.