(12) UK Patent (19) GB (11) 2 252 789 (13) B

(54) Title of Invention

Hinge device

(51) INT CL[5]; E05D 11/00

(21) Application No
9202030.4

(22) Date of filing
30.01.1992

(30) Priority Data

(31) 03090652
03003596

(32) 22.04.1991
04.02.1991

(33) JP

(43) Application published
19.08.1992

(45) Patent published
24.05.1995

(72) Inventor(s)
Syuuji Saeki
Narumi Nakajima

(73) Proprietor(s)
Mitsubishi Denki Kabushiki Kaisha

(Incorporated in Japan)

2-3 Marunouchi 2-chome
Chiyoda-ku
Tokyo
Japan

(74) Agent and/or
Address for Service
Marks & Clerk
57-60 Lincoln's Inn Fields
London
WC2A 3LS
United Kingdom

(52) Domestic classification
(Edition N)
E2F FPA
U1S S1966

(56) Documents cited
None

(58) Field of search

As for published application
2252789 A *viz:*
UK CL(Edition K) E2F FCM
FPA FPX
INT CL[5] E05D, F25D
updated as appropriate

FIGURE 1

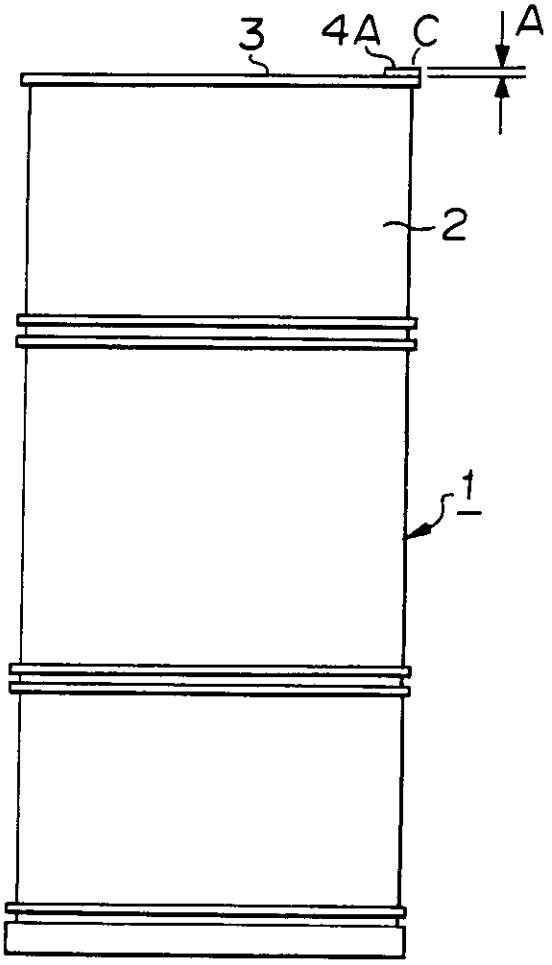

FIGURE 2

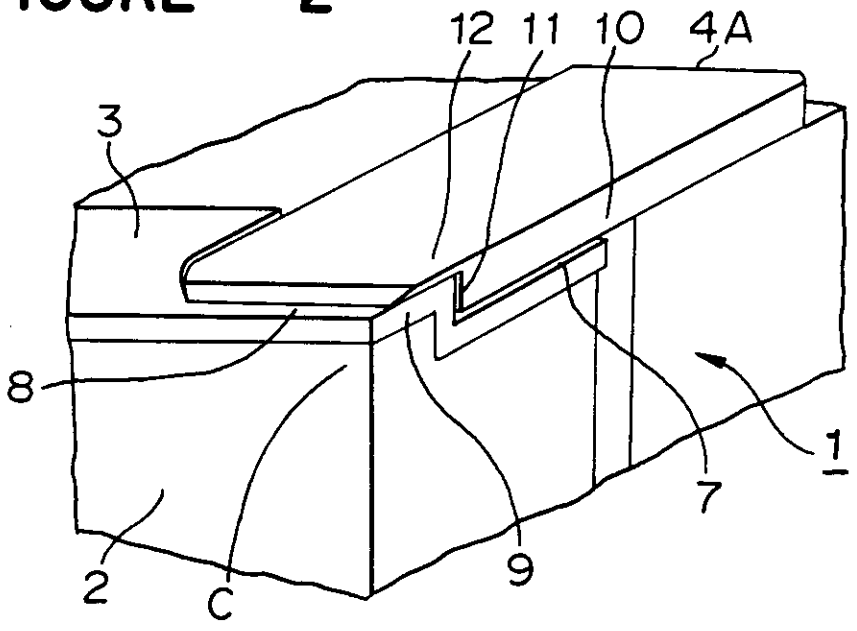

FIGURE 3

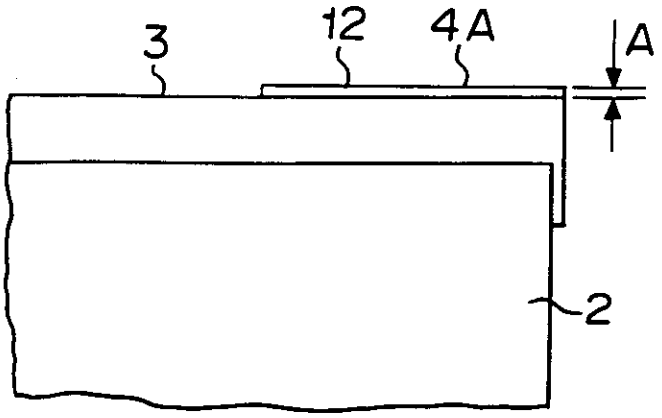

FIGURE 4

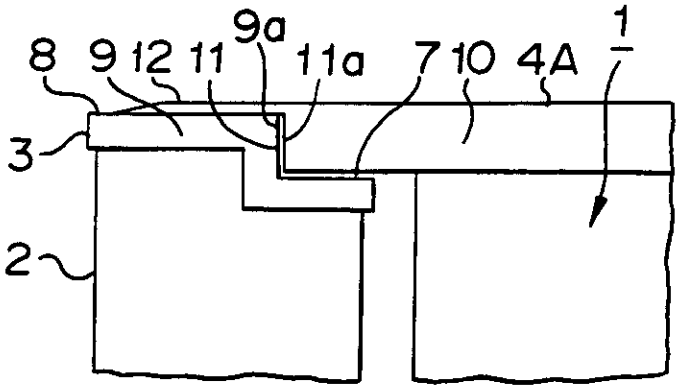

FIGURE 5

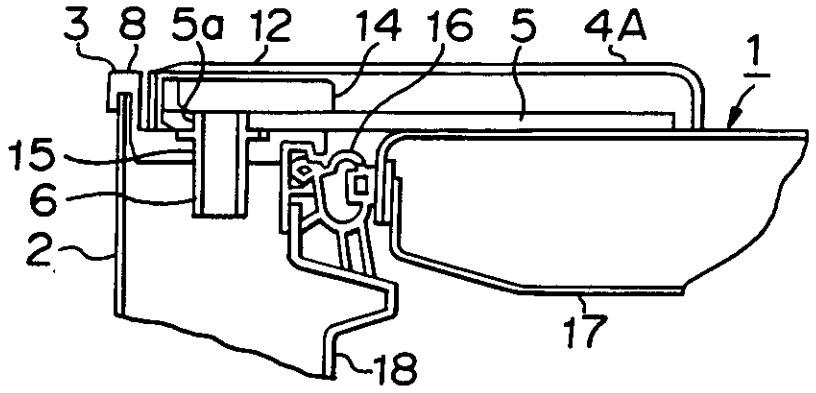

FIGURE 6

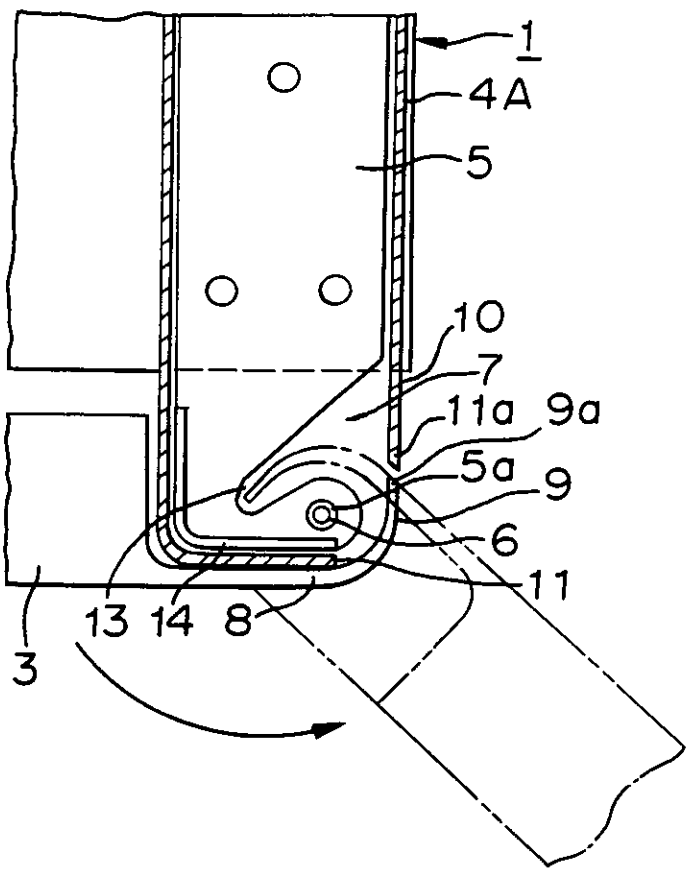

FIGURE 7

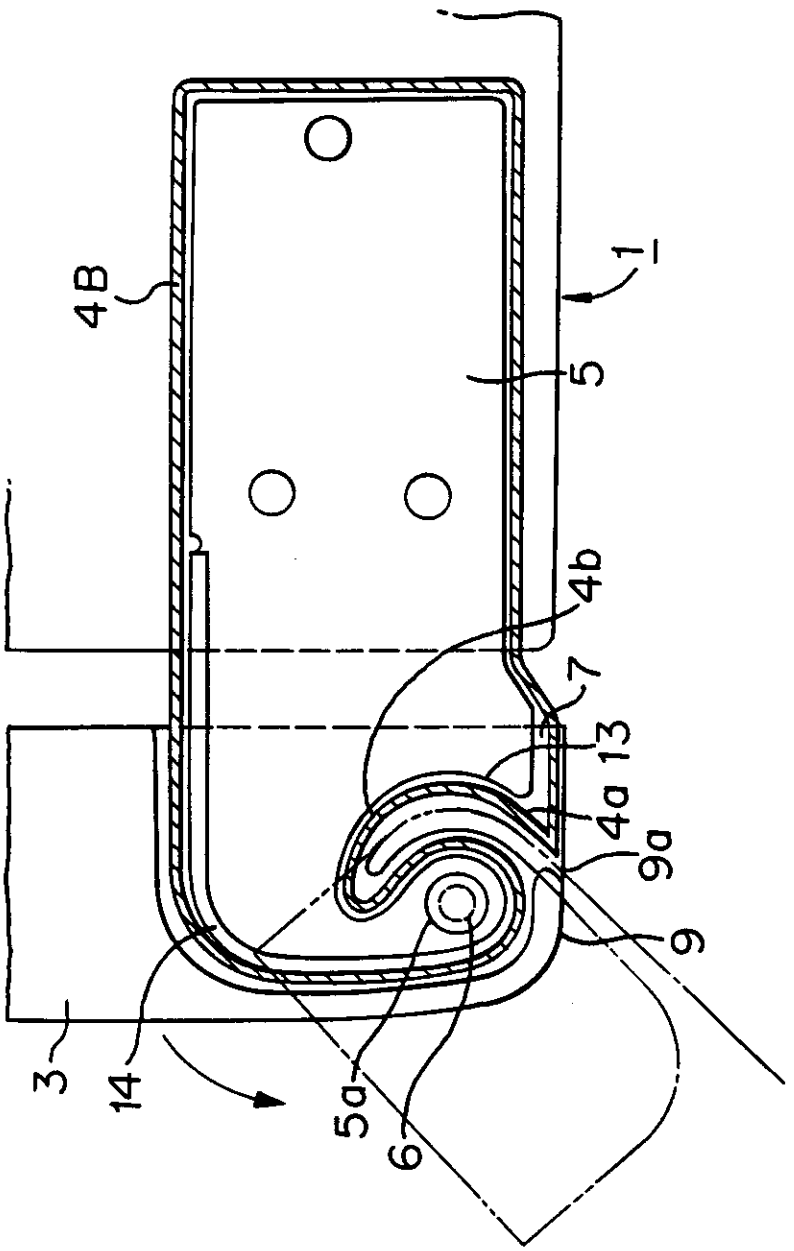

FIGURE 8

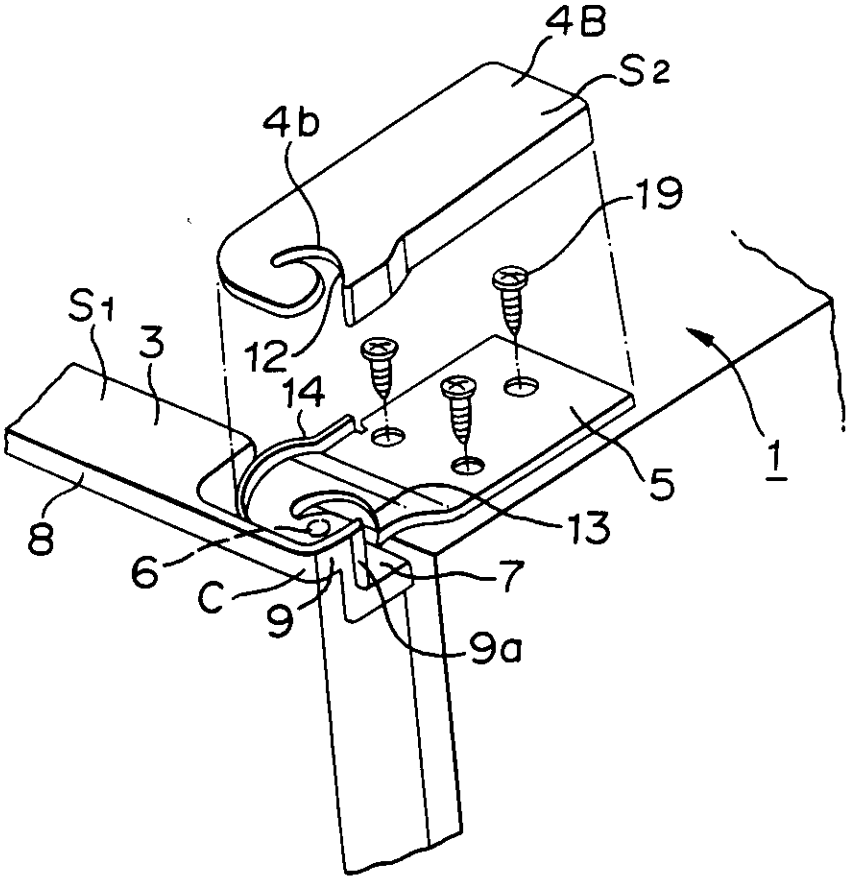

FIGURE 9

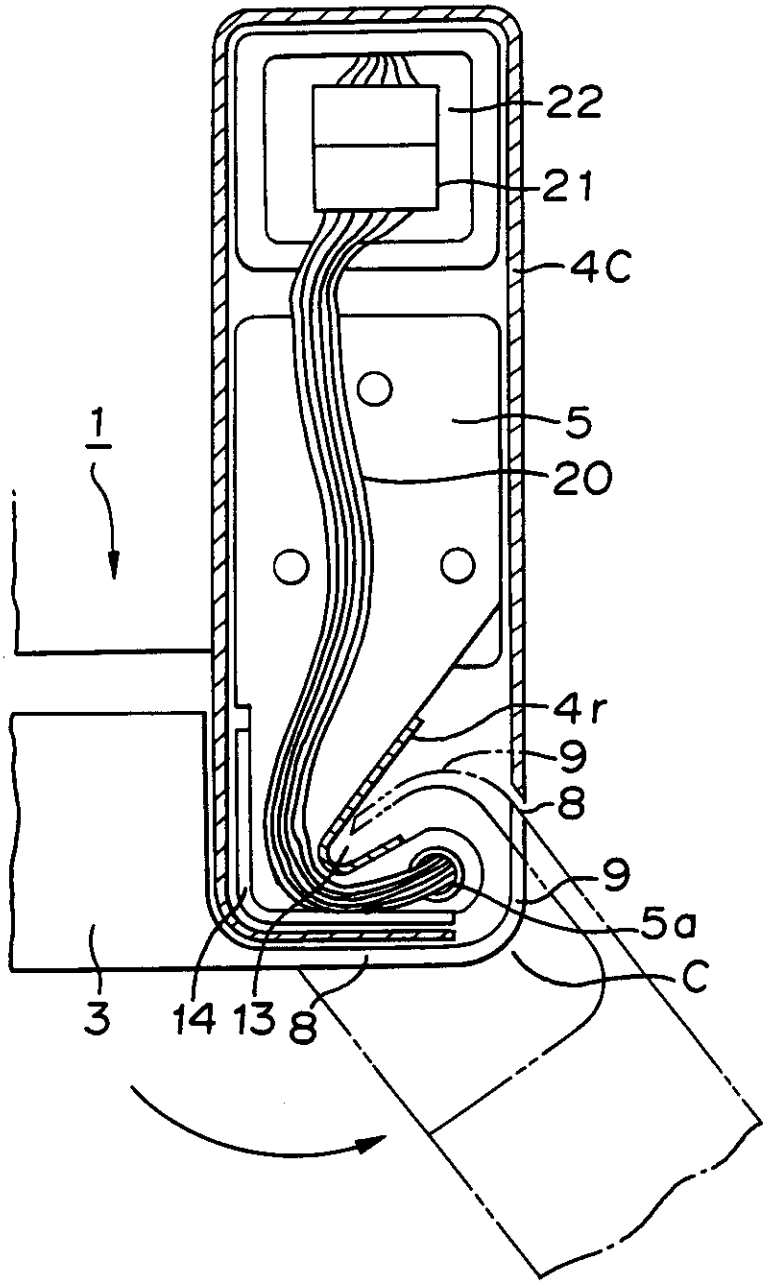

FIGURE 10

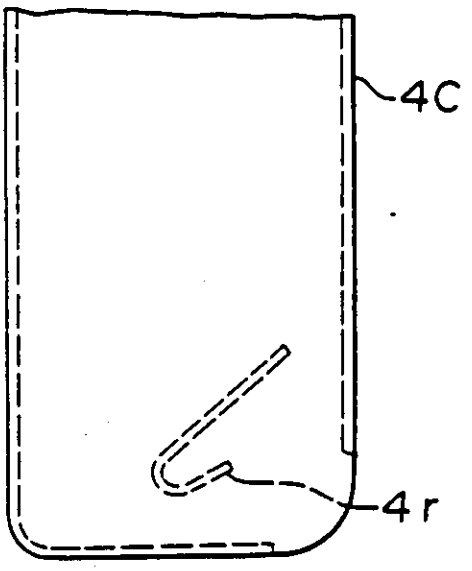

FIGURE 11

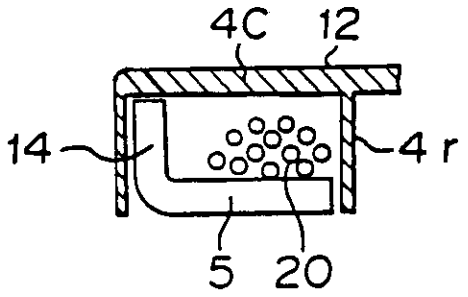

FIGURE 12

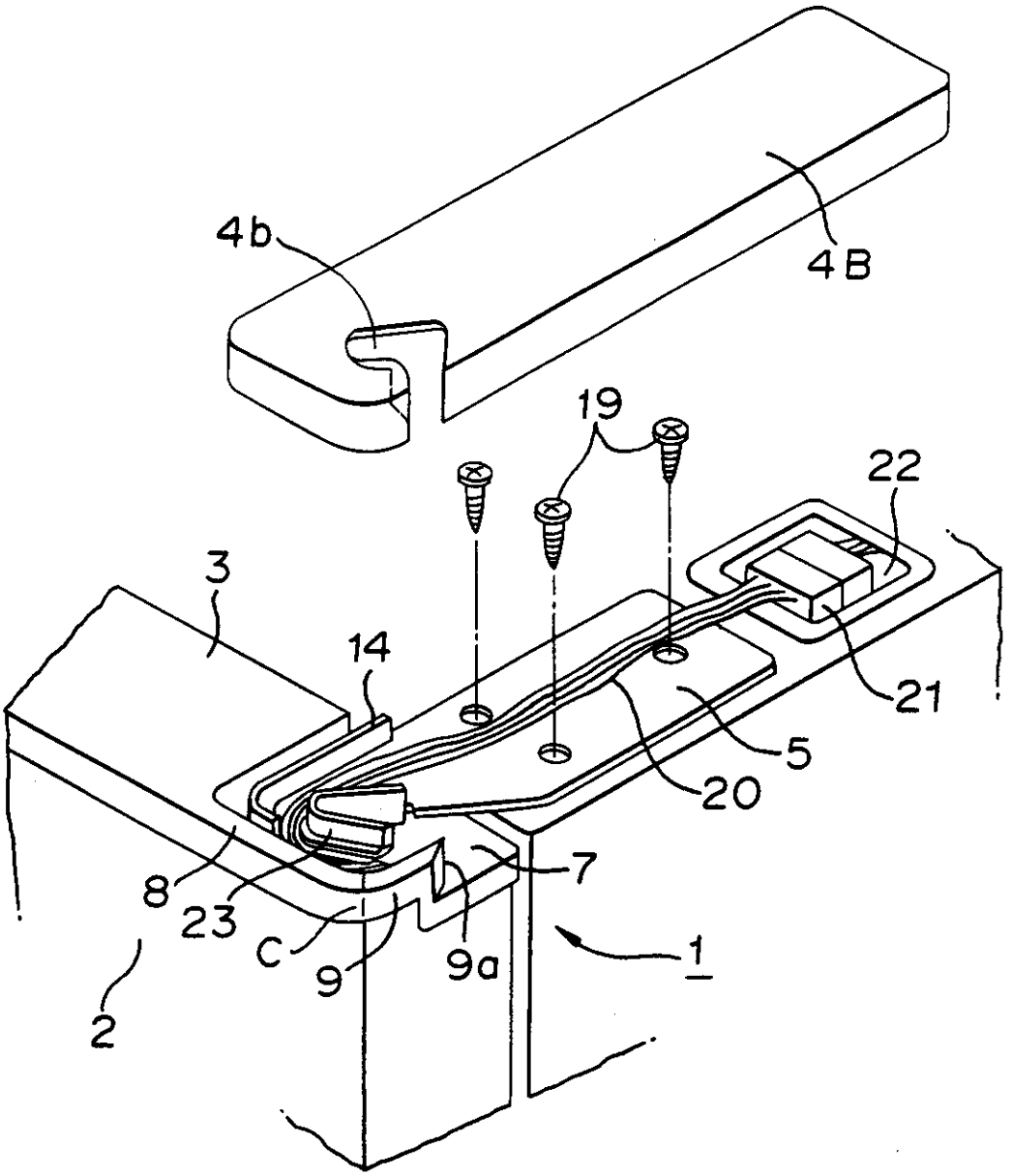

FIGURE 13

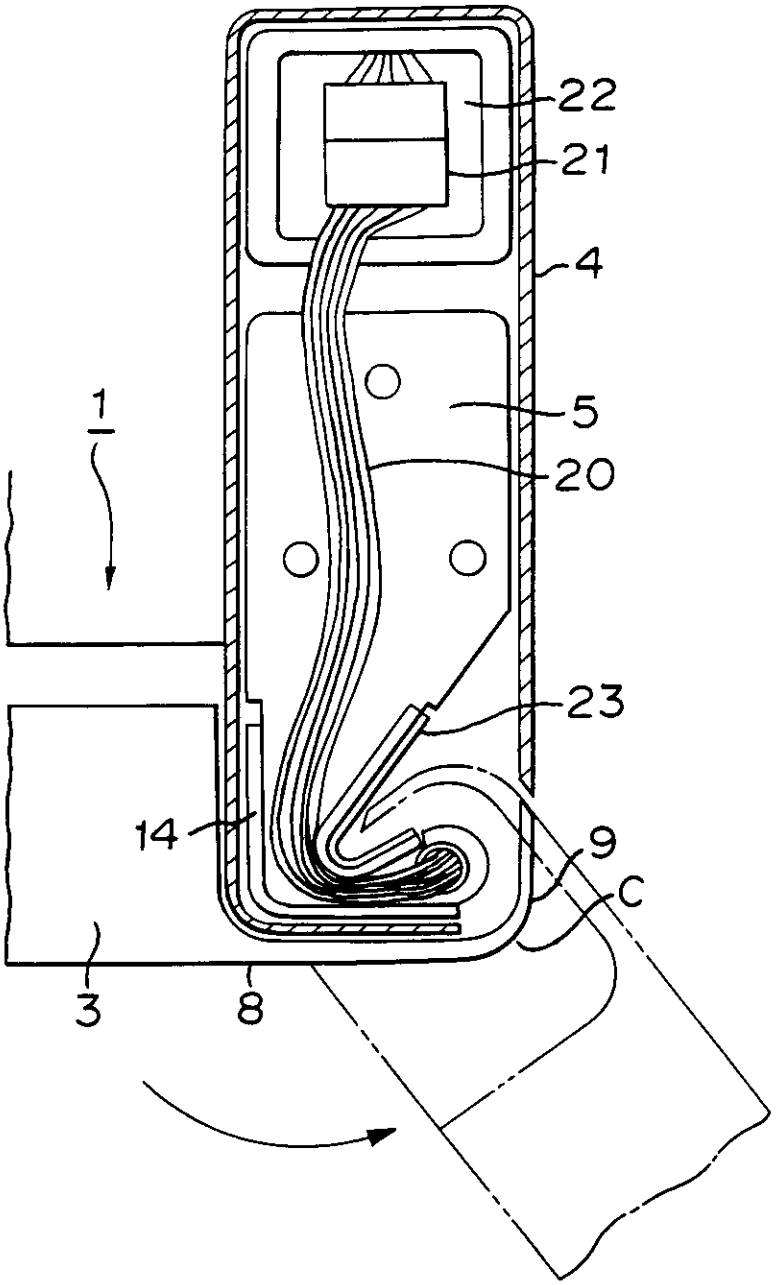

FIGURE 14

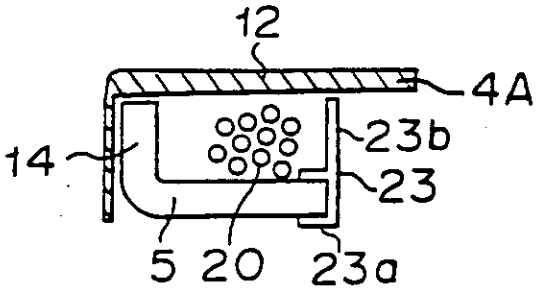

FIGURE 15

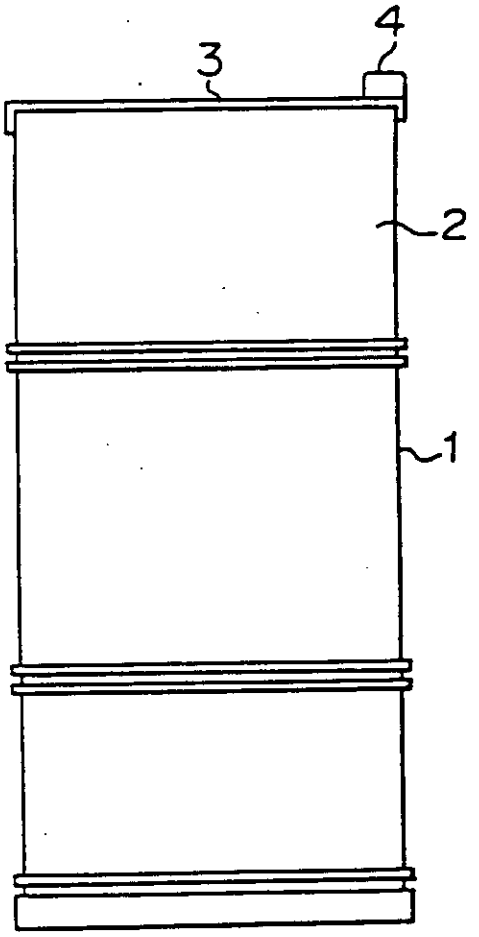

FIGURE 16

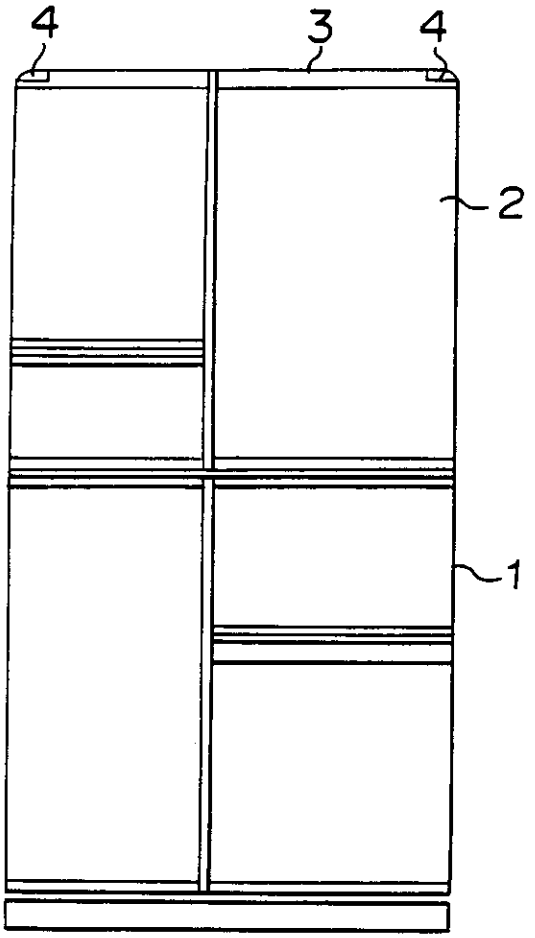

FIGURE 17

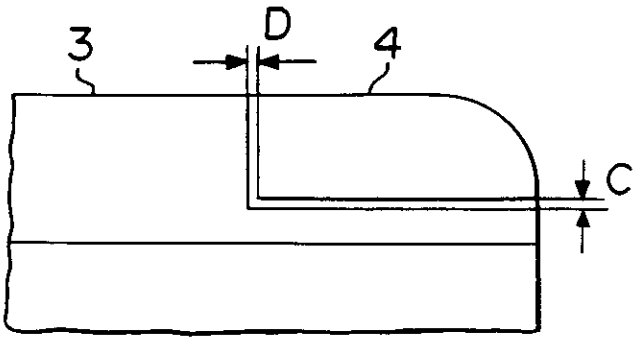

FIGURE 18

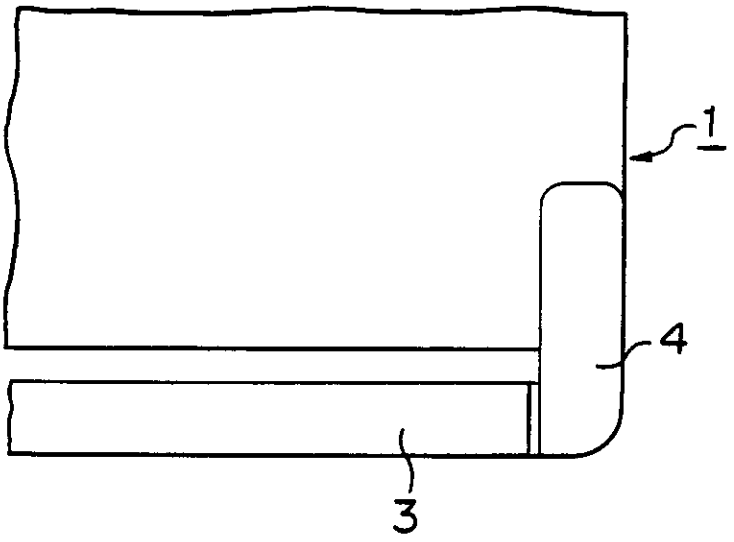

FIGURE 19

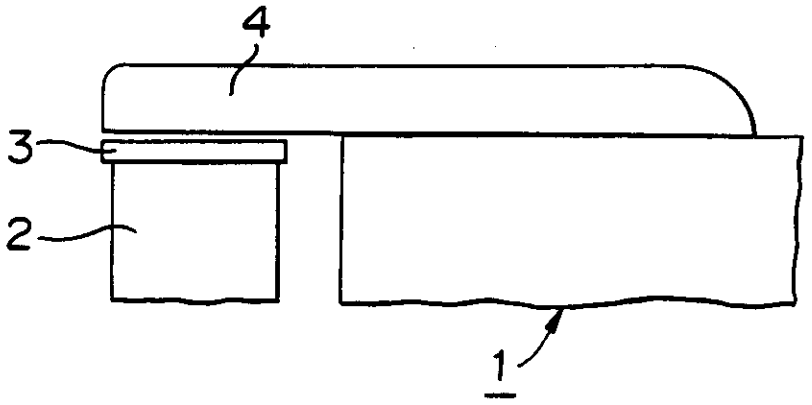

FIGURE 20

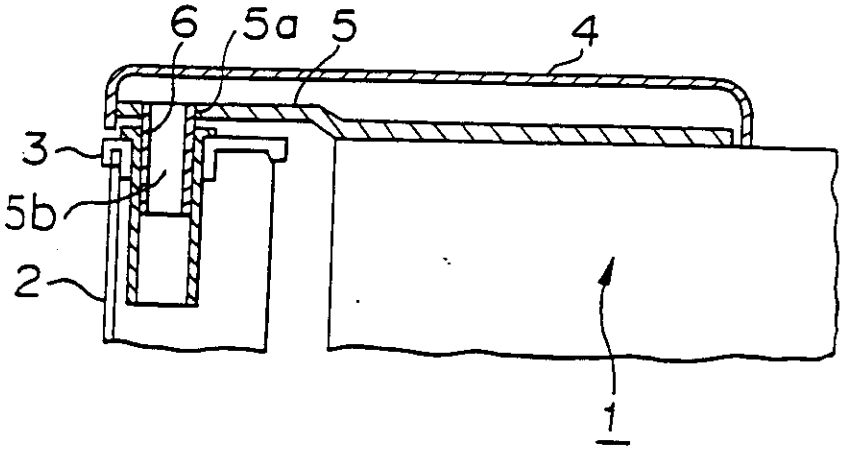

FIGURE 21

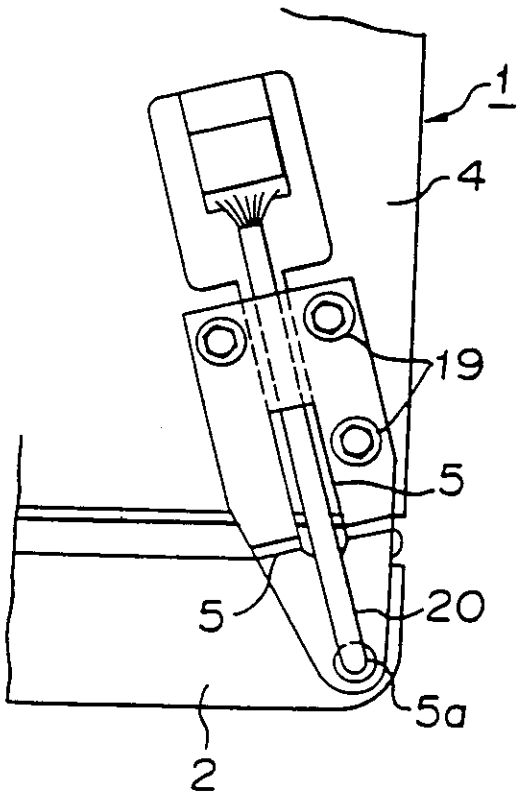

HINGE DEVICE

The present invention is related to a hinge device for a refrigerator and the like, and in particular a structure around a hinge.

Referring now to Figure 15, there is shown a front view showing a refrigerator with a conventional hinge device which has been disclosed in e.g. Japanese Unexamined Utility Model Publication No. 185587/1984. In Figure 15, reference numeral 1 designates a refrigerator main body. Reference numeral 2 designates a door. Reference numeral 3 designates a door frame. Reference numeral 4 designates a hinge cover which is formed from a thermoplastic resin having a general grade. Referring now to Figures 16 through 21, there is shown another conventional device. In these Figures, reference numeral 5 designates a hinge which is formed from a metallic plate such as an iron plate. Reference numeral 5b designates a hole which is formed in the hinge 5 to pass a lead 20 therethrough. Reference numeral 5a designates an axial hole which is formed in the leading edge of the

hinge 5 to hold a shaft 6. Reference numeral 19 designates screws which fix the hinge 5 to the refrigerator main body 1.

The operations of the conventional devices having such structures will be explained.

In the conventional device of Figure 15, the door frame 3 has a top surface flatted, a hinge not shown is arranged to simply support the door 2 from upwardly in a swingable manner, and the hinge is covered by the hinge cover 4. The hinge cover 4 is seen to project from the door frame 3 upwardly. In the conventional device of Figures 16 through 21, a door frame 3 has a stepped portion formed therein around the hinge 5, the hinge 5 is arranged in the stepped portion, and a hinge cover 4 covers the stepped portion to make it inconspicuous. As a result, even if the hinge device is seen from front as shown in the front view of Figure 17 showing the essential parts in an enlarged manner, and even if the hinge device is seen from laterally as shown in the side view of Figure 19 showing the essential parts in an enlarged manner, no parts of the hinge device are seen to project from the door frame 3. A lead $_{20}$ with a protective sheath is passed through the hole 5b in the hinge 5 to prevent the lead from being damaged when the door 2 is opened and closed.

The structures of the conventional hinge devices creates problems in that the hinge cover projects from

the door frame, that even if the hinge cover does not project as shown in Figure 17, the presence of gaps C and D between the door frame and the hinge cover makes appearance unsightly and that if in particular the door is loaded, the size of the gap C could enlarge to make appearance more unattractive as viewed from the front of the door.

It is an object of the present invention to solve the problems of the conventional devices, and to provide a hinge device which is almost free from the projection of a hinge cover or the presence of a gap in a joint as viewed from the front of a door.

It is another object of the present invention to provide a hinge device which is free from unsightly appearance and is excellent in terms of design, and which can ensure to guide and protect a lead in an easy manner.

According to a first aspect of the present invention, there is provided a hinge device comprising: a hinge for swingably supporting a door at a main body; a hinge cover covering the hinge; and a door frame forming an end section of the door, which door frame has a recessed portion for swingably supporting the door on the hinge, formed in a rear corner of the door frame at the hinge position, which recessed portion is formed in rear portions of the ~~first~~ front wall and the side wall of the door frame whereby the part of the side wall adjacent the front wall is level with the front wall;

the hinge cover having a main surface and a side surface, the main surface being in substantially the same plane as an end surface of the door frame, and the side surface lying (in the closed position of the door) in substantially the same plane as the side wall and having a shape complementary to the side surface shape of the recessed portion, the said side surface closing the side of the recessed portion, thereby preventing the hinge and the hinge cover from being exposed at the front of the door.

According to a second aspect of the present invention, there is provided a hinge

device comprising: a hinge for swingably supporting a door at a main body; a hinge cover covering the hinge; and a door frame forming an end section of the door, which door frame has a recessed portion for swingably supporting the door on the hinge, formed in a rear corner of the door frame and at the hinge position, which recessed portion is formed in rear portions of the ~~first~~ front wall and the side wall of the door frame whereby the part of the side wall adjacent the front wall is level with the front wall; the hinge cover having a main surface formed by a plate, and a side surface, the main surface being at a level proud of an end surface of the door frame by an amount substantially equal to the plate thickness, the plate of the hinge cover extending over the front wall end surface, and the side surface lying (when the door is closed) in substantially the same plane as the side wall and complementary in shape to the side surface shape of the recessed portion.

The hinge cover may be formed so that when the door is opened a rear end of the side wall of the door frame at the recessed portion is received in a groove formed in the hinge cover with a narrow gap between the door and the groove such as to prevent the rear end from contacting the groove while making entry of dust difficult.

According to a third aspect of the present invention, there is provided a hinge device comprising: a hinge for swingably supporting a door at a main body; a hinge cover covering the hinge; and a door frame forming an end section of the door, which door frame has a recessed portion for swingably supporting the door on the hinge, formed in a rear corner of the door frame and at the hinge position, which recessed portion is formd in rear portions of the ~~first~~ front wall and the side wall of the door frame whereby the part of the side wall adjacent the front wall is level with the front wall; the hinge cover having a main surface formed by a plate, and a side surface, the main surface being at the same level as or slightly recessed relative to an upper end surface of the door frame, the said plate being formed with a groove to avoid interference with

a rear end of the side wall of the door frame at the recessed portion when the door is opened, and the side surface lying (when the door is closed) in substantially the same plane as the side wall and having a shape complementary to the side surface shape of the recessed portion.

According to a fourth aspect of the present invention, there is provided a hinge device comprising: a hinge for swingably supporting a door at a main body; a hinge cover covering the hinge; and a door frame forming an end section of the door, which door frame has a recessed portion for swingably supporting the door on the hinge, formed in a rear corner of the door frame and at the hinge position, which recessed portion is formed in rear portions of the ~~first~~ front wall and the side wall of the door frame whereby the part of the side wall adjacent the front wall is level with the front wall; the hinge having a groove formed therein to avoid interference with a rear end of the side wall of the door frame at the recessed portion when the door is opened.

The groove may be formed so that when the door is opened and a rear end of the side wall of the door frame at the recessed portion is received in the groove, a small gap is maintained between the door and the groove to prevent the rear end from contacting the groove, and make entry of dust difficult.

The groove may have a lead guide member arranged on an edge thereof to protect a lead, the lead guide member having a shape similar to that of the groove and extending almost to the inner surface of the hinge cover.

Preferably the lead guide member has a semicircular surface contacting the lead to prevent the lead from being damaged by the rear end of the side wall of the door frame at the recessed portion when the door is opened.

The hinge cover may have a main plate provided with a rib for protecting a lead, the rib projecting inwardly from the plate to the groove in the hinge, and having a shape similar to that of an edge of the groove in the hinge to prevent the hinge from interfering with the rear end of the side wall of the door frame at the recessed portion when the door is opened.

The rib may have a semicircular surface contacting the lead to prevent the lead from being damaged by the rear end of the side wall of the door frame at the recessed portion when the door is opened.

The hinge device which is constructed in accordance with the present invention is almost free from the projection of a hinge cover or the presence of a gap in a joint as viewed from the front when a door is closed, can minimize a gap which is formed in a side surface, can improve appearance in terms of design, can completely conceal a hinge even when the door is opened. In addition, it becomes easy to arrange a lead, and there is no possibility that when opening and closing the door causes the rear end of the side wall of the door frame at the recessed portion to be received in the groove in the hinge, the lead is pinched and damaged.

In drawings:

Figure 1 is a front view showing a refrigerator which is provided with the hinge device according to a first embodiment of the present invention;

Figure 2 is a schematic perspective view showing the

essential parts of the first embodiment;

Figure 3 is a front view showing the essential parts of the first embodiment;

Figure 4 is a side view showing the essential parts of the first embodiment;

Figure 5 is a cross sectional side view showing the structure of the first embodiment;

Figure 6 is a plan view showing the structure of the essential parts of the first embodiment;

Figure 7 is a plan view showing the structure of the essential parts of a second embodiment;

Figure 8 is an exploded perspective view showing the essential parts of the hinge device according to the second embodiment;

Figure 9 is a plan view showing the structure of the essential parts of the hinge device according to a third embodiment;

Figure 10 is a plan view showing the essential parts of the hinge cover according to the third embodiment;

Figure 11 is a cross sectional view showing the essential parts of the hinge device wherein leads are arranged according to the third embodiment;

Figure 12 is an exploded perspective view showing the structure of the essential parts of the hinge device according to a fourth embodiment;

Figure 13 is a cross sectional plan view showing the structure of the essential parts of the hinge device

wherein leads are arranged according to the fourth embodiment;

Figure 14 is a cross sectional view showing the structure of the essential parts of the hinge device wherein the leads are arranged according to the forth embodiment;

Figure 15 is a front view showing a refrigerator with a conventional hinge device;

Figure 16 is a front view showing a refrigerator with another conventional hinge device;

Figure 17 is an enlarged front view showing the essential parts of the conventional hinge device of Figure 16;

Figure 18 is an enlarged plan view showing the essential parts of the conventional hinge device of Figure 16;

Figure 19 is an enlarged side view showing the essential parts of the conventional hinge device of Figure 16;

Figure 20 is a cross sectional side view showing the structure of the essential parts of the conventional hinge device of Figure 16; and

Figure 21 is a plan view of the structure of the essential parts of the conventional hinge device of Figure 16, showing how to arrange a lead.

Preferred embodiments of the present invention will be described with reference to the drawings.

Referring now to Figure 1, there is shown a front view showing a refrigerator which is provided with the hinge device according to a first embodiment of the present invention. Figure 2 is a schematic perspective view showing the essential parts of the hinge device according to the first embodiment. Figure 3 is a front view showing the essential parts. Figure 4 is a side view showing the essential parts. Figure 5 is a cross sectional side view showing the structure of the essential parts. Figure 6 is a plan view showing the structure of the essential parts.

Like reference numerals in these Figures designate parts identical or corresponding to the ones of the conventional devices.

In Figures 1 to 6, reference numeral 4A is a hinge cover. Reference numeral 7 designates a recess formed in a right side corner C of a door frame 3, except for a part of a front wall 8 of the door frame 3 and a part of a side wall 9 extending therefrom. The door frame 3 forms an upper end section of a door 2. In the recessed portion 7 is arranged a hinge 5. The hinge 5 is formed with an axial hole 5a and a shaft 6 to swingably support the door 2. Reference numeral 9a designates a rear end of the side wall 9. Reference numeral 10 designates a side plate of the hinge cover 4A, which has a cutout 11 formed therein to correspond to the shape of the side wall 9. Reference numeral 12 designates a top or main surface plate of the hinge cover 4A, which is provided at a higher level than the door frame 3 by an amount substantially equal to the plate thickness, which has the leading end extended along a top surface of the door frame 3, and which is formed to accommodate by means of the cutout 11 swung parts of the front wall 8 and the side wall 9 under the top surface plate 12 of the hinge cover 4A when the door 2 is opened. Reference numeral 13 designates a groove which is formed in the hinge 5 fixed to a main body 1, and which is cut deep into in such a shape that the groove is prevented from interfering with the pivoting path of the rear end 9a of the side wall 9. Reference numeral 14 designates a flange which is

formed at a front portion of the hinge 5 substantially in an L-character shape in section, and which reinforces the strength of a portion in which the groove 13 is formed. Reference numeral 15 designates a hole which swingably supports the shaft 6 supported by the hinge 5, and which is formed in the door frame 3. Reference numeral 16 designates a gasket. Reference numeral 17 designates an inner casing. Reference numeral 18 designates an inside plate of the door.

The first embodiment will be further explained based on the basic structure stated above. The door frame 3 has the recessed portion 7 around the hinge 5, and the recessed portion 7 has the hinge 5 mounted thereon by screws (not shown). The hinge cover 4A has the top surface plate 12 located at a higher level than the top surface of the door frame 3 by substantially the plate thickness, the hinge cover has the side surface plate 10 formed with the cutout 11 to correspond to the shape of the side wall 9 of the door frame 3 at the recessed portion 7, and the hinge cover 4A is fitted to a side surface of the hinge 5. As shown in Figures 1 to 4, the hinge device according to the first embodiment has such an appearance that the hinge cover 4A is seen to project from the top surface of the door frame 3 by the amount A substantially of the plate thickness of the top surface plate 12 as viewed from the front, that a joint between the recessed portion 7 and the cutout 11 is seen to correspond to the shape of the side wall 9 as viewed from laterally, and that a joint between the door frame 3 and the hinge cover 4A is seen as viewed from the top. The projecting parts and the joints are minimized as viewed from the respective directions. The hinge device has excellent appearance, and the appearance is greatly improved in comparison with the conventional devices except for the appearance as viewed from the side.

When the door 2 is opened, the rear end 9a of the side wall 9 of the door frame 3 is swung about the shaft 6 as shown by chain lines in Figure 6, and the rear end 9a moves to a position closest to the inner end of the groove 13 in the hinge 5 until the

door is stopped by a door stop (not shown) which is attached to a lower portion of the door 2. At that time, a part of the front wall 8 which is located around the recessed portion 7 is stopped just before that part has hit a front end 11a of the cutout 11 of the hinge cover 4A. The hinge 5 is concealed by the front wall 8 and the side wall 9 of the door frame 3 as viewed from outside, and by the side surface plate 10 of the hinge cover 4A as viewed from the inner side, thereby presenting an excellent appearance. In addition, the strength of the door 2 is sufficiently reinforced by the flange 14 to withstand a great load applied to the door 2, the flange 14 being formed in the L character shape in section around the hinge 5. Although in the first embodiment the hinge device is shown to be arranged in the upper right corner of the door 2, the hinge device may be arranged on the left side or in a lower corner of the door 2, which can offer advantages similar to the first embodiment.

Now, the hinge device according to a second embodiment of the present invention will be described in detail, referring to a schematic perspective view showing the essential parts of the refrigerator of Figure 8, and a schematic plan view of the essential parts of Figure 7.

Like reference numerals designate parts identical or corresponding to those of the first embodiment.

In Figure 8, reference numeral 4B designates a hinge cover which has a top surface S_2 formed on substantially the same plane as a top surface S_1 of a door frame 3, or formed to be slightly ~~higher or~~ lower than the top surface S_1. Reference numeral 4b designates an arched groove which is formed in a top surface plate 12 of the hinge cover 4B to prevent a rear end 9a of a side wall 9 from interfering with the top surface plate 12 of the hinge cover 4B when a door 2 is opened.

In accordance with the structure of the second embodiment, an upper end

portion of the rear end 9a of the side wall 9 of the door frame 3 which is swung about a shaft 6 by opening the door 2 and is received into a groove 13 formed in a hinge 5 (fixed by screws 19) is introduced into the groove 4b of the hinge cover 4B as shown in Figure 7. Such arrangement allows the door 2 to be opened and closed without interference. Because other features of the second embodiment are similar to those of the first embodiment, explanation of those features will be omitted for the sake of simplicity.

In Figure 9, there is shown a plan view showing the structure of the essential parts of the hinge device according to a third embodiment of the present invention. In Figure 10, there is shown a partial plan view showing the hinge cover. In Figure 11, there is shown a cross sectional view showing the essential parts of the hinged device wherein leads are arranged in accordance with the third embodiment.

Like reference numerals designate parts identical or corresponding to those of the first and second embodiments.

In Figures 9 to 11, reference numeral 4C designates a hinge cover which has a top surface plate 12 provided with a rib 4r formed downwardly from a bottom surface thereof, the rib 4r being formed to correspond to a groove 13 formed in a hinge 5 and extending to an inner edge of the groove 13. Reference numeral 21 designates a connector which connects leads 20 to a power source. Reference numeral 22 designates a connector housing.

In accordance with the structure of the third embodiment, the leads 20 can be protected by the rib 4r at its peripheral surface to be positively prevented from being damaged by a rear end 9a of a side wall 9 when a door 2 is opened.

In Figure 12, there is shown a perspective view showing the structure of the essential parts of a hinge device which has leads arranged therein in accordance with a

fourth embodiment. In Figure 13, there is shown a plan view showing the structure of the essential parts. In Figure 14, there is shown a cross sectional view showing the structure of the essential parts of the hinge device which has a lead guide member mounted thereto.

In Figures 12 to 14, reference numeral 23 designates a lead guide member which includes a fitted holder 23a and a partition wall 23b, the fitted holder 23a being engaged and supported by and extending along a groove 13 formed in a hinge 5, and the partition wall 23b extending upwardly from the fitted holder 23a in a substantially vertical direction.

In the fourth embodiment, the lead guide member 23 is supported by the fitted holder 23a at the inner edge of the groove 13 in the hinge 5 and the partition wall 23b defines an arranging section for the leads 20. As a result, the leads 20 can not only be safely protected from damage when a door is opened and closed, but also be guided for arrangement to facilitate the arrangement of the leads 20.

As explained in detail, the present invention allows the appearance of the hinge device for mounting the door to the main body to be made extremely neat, and the commercial value of the hinge device to be increased. In addition, the present invention can prevent leads arranged in the hinge device from being damaged when the door is opened and closed. As a result, it is possible to dispense with a protective sheath for the leads, decreasing the cost of materials and manufacturing costs.

Although explanations of the embodiments have been made in the case wherein the hinge 5 is formed from a metallic plate, and the hinge covers 4A, 4B and 4C are formed of a thermoplastic resin of a general grade, the materials for the hinge and the hinge cover are not limited to such materials. If an engineering plastic material having great acceptable shearing stress is used to form the hinge and hinge cover as one unit, a small sized hinge device having great geometrical moment of inertia can be obtained by increasing wall thickness and adding a reinforcing rib. Advantages offered by such a hinge device are similar or superior to the embodiments.

Although in the embodiments the hinge 5 is made of a metallic plate and the lead guide member 23 is prepared as a separate part, an engineering plastic material may be used to form the hinge 5 and the lead guide member 23 as one unit.

CLAIMS:

1. A hinge device comprising:

a hinge for swingably supporting a door at a main body;

a hinge cover covering the hinge; and

a door frame forming an end section of the door, which door frame has a recessed portion for swingably supporting the door on the hinge, formed in a rear corner of the door frame at the hinge position, which recessed portion is formed in rear portions of the ~~first~~ front wall and the side wall of the door frame whereby the part of the side wall adjacent the front wall is level with the front wall;

the hinge cover having a main surface and a side surface, the main surface being in substantially the same plane as an end surface of the door frame, and the side surface lying (in the closed position of the door) in substantially the same plane as the side wall and having a shape complementary to the side surface shape of the recessed portion, the said side surface closing the side of the recessed portion, thereby preventing the hinge and the hinge cover from being exposed at the front of the door.

2. A hinge device comprising:

a hinge for swingably supporting a door at a main body;

a hinge cover covering the hinge; and

a door frame forming an end section of the door, which door frame has a recessed portion for swingably supporting the door on the hinge, formed in a rear corner of the door frame and at the hinge position, which recessed portion is formed in rear portions of the ~~first~~ front wall and the side wall of the door frame whereby the part of the side wall adjacent the front wall is level with the front wall;

the hinge cover having a main surface formed by a plate, and a side surface, the main surface being at a level proud of an end surface of the door frame by an amount

substantially equal to the plate thickness, the plate of the hinge cover extending over the front wall end surface, and the side surface lying (when the door is closed) in substantially the same plane as the side wall and complementary in shape to the side surface shape of the recessed portion.

3. A hinge device according to Claims 1 or 2, wherein the hinge cover is formed so that when the door is opened a rear end of the side wall of the door frame at the recessed portion is received in a groove formed in the hinge cover with a narrow gap between the door and the groove such as to prevent the rear end from contacting the groove while making entry of dust difficult.

4. A hinge device comprising:

a hinge for swingably supporting a door at a main body;

a hinge cover covering the hinge; and

a door frame forming an end section of the door, which door frame has a recessed portion for swingably supporting the door on the hinge, formed in a rear corner of the door frame and at the hinge position, which recessed portion is formd in rear portions of the ~~first~~ front wall and the side wall of the door frame whereby the part of the side wall adjacent the front wall is level with the front wall;

the hinge cover having a main surface formed by a plate, and a side surface, the main surface being at the same level as or slightly recessed relative to an upper end surface of the door frame, the said plate being formed with a groove to avoid interference with a rear end of the side wall of the door frame at the recessed portion when the door is opened, and the side surface lying (when the door is closed) in substantially the same plane as the side wall and having a shape complementary to the side surface shape of the recessed portion.

5. A hinge device comprising:

a hinge for swingably supporting a door at a main body;

a hinge cover covering the hinge; and

a door frame forming an end section of the door, which door frame has a recessed portion for swingably supporting the door on the hinge, formed in a rear corner of the door frame and at the hinge position, which recessed portion is formed in rear portions of the ~~first~~ front wall and the side wall of the door frame whereby the part of the side wall adjacent the front wall is level with the front wall;

the hinge having a groove formed therein to avoid interference with a rear end of the side wall of the door frame at the recessed portion when the door is opened.

6. A hinge device according to Claim 4 or 5, wherein the groove is formed so that when the door is opened and a rear end of the side wall of the door frame at the recessed portion is received in the groove, a small gap is maintained between the door and the groove to prevent the rear end from contacting the groove, and make entry of dust difficult.

7. A hinge device according to Claim 5, or Claim 6 when dependent thereon, wherein the groove has a lead guide member arranged on an edge thereof to protect a lead, the lead guide member having a shape similar to that of the groove and extending almost to the inner surface of the hinge cover.

8. A hinge device according to Claim 7, wherein the lead guide member has a semicircular surface contacting the lead to prevent the lead from being damaged by the rear end of the side wall of the door frame at the recessed portion when the door is opened.

9. A hinge device according to Claim 5 or Claim 6 when dependent thereon, wherein the hinge cover has a main plate provided with a rib for protecting a lead, the rib projecting inwardly from the plate to the groove in the hinge, and having a shape similar to that of an edge of the groove in the hinge to prevent the hinge from interfering with the rear end of the side wall of the door frame at the recessed portion when the door is opened.

10. A hinge device according to Claim 9, wherein the rib has a semicircular surface contacting the lead to prevent the lead from being damaged by the rear end of the side wall of the door frame at the recessed portion when the door is opened.

11. A hinge device as claimed in any of the preceding Claims in which the hinge and hinge cover are formed as one unit.

12. A hinge device, substantially as herein described with reference to Figures 1 to 6, Figures 7 and 8, Figures 9 to 11, or Figures 12 to 14 of the accompanying drawings.

REGISTER ENTRY FOR GB2252789

Form 1 Application No GB9202030.4 filing date 30.01.1992

priorities claimed:
22.04.1991 in Japan - doc: 03090652
04.02.1991 in Japan - doc: 03003596

Title HINGE DEVICE

Applicant/Proprietor
MITSUBISHI DENKI KABUSHIKI KAISHA, Incorporated in Japan, 2-3 Marunouchi 2-chome, Chiyoda-ku, Tokyo, Japan [ADP No. 00608109005]

Inventors
SYUUJI SAEKI, MITSUBISHI DENKI KABUSHIKI KAISHA, Shizuoka Seisakusho, 18-1 Oshika 3-chome, Shizuoka-shi, Shizuoka 422, Japan [ADP No. 06091789001]

NARUMI NAKAJIMA, MITSUBISHI DENKI ENGINEERING KABUSHIKI KAISHA, Nagoya Jigyosho, Shizuokashisho 18-1, Ojika 3-chome, Shizuoka-shi, Shizuoka-ken, Japan [ADP No. 06091797001]

Classified to
E2F U1S
E05D

Address for Service
MARKS & CLERK, 57-60 Lincoln's Inn Fields, LONDON, WC2A 3LS, United Kingdom [ADP No. 00000018001]

Publication No GB2252789 dated 19.08.1992

Examination requested 13.07.1992

Patent Granted with effect from 24.05.1995 (Section 25(1)) with title HINGE DEVICE

**** END OF REGISTER ENTRY ****

RENEWAL DETAILS

PUBLICATION NUMBER GB2252789

PROPRIETOR(S)

Mitsubishi Denki Kabushiki Kaisha Incorporated in Japan, 2-3 Marunouchi 2-chome, Chiyoda-ku, Tokyo, Japan

DATE FILED 30.01.1992

DATE GRANTED 24.05.1995

DATE NEXT RENEWAL DUE 30.01.1996

DATE NOT IN FORCE

DATE OF LAST RENEWAL

YEAR OF LAST RENEWAL 00

STATUS PATENT IN FORCE

**** END OF REPORT ****