Jan. 5, 1965 R. H. TAUB 3,164,350

MERCHANDISE DISPLAY STAND

Filed Aug. 7. 1961 3 Sheets-Sheet 1

Fig. 13

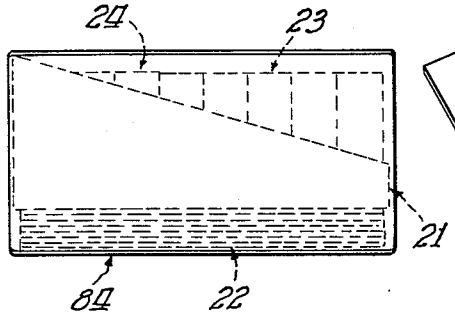

Fig. 4

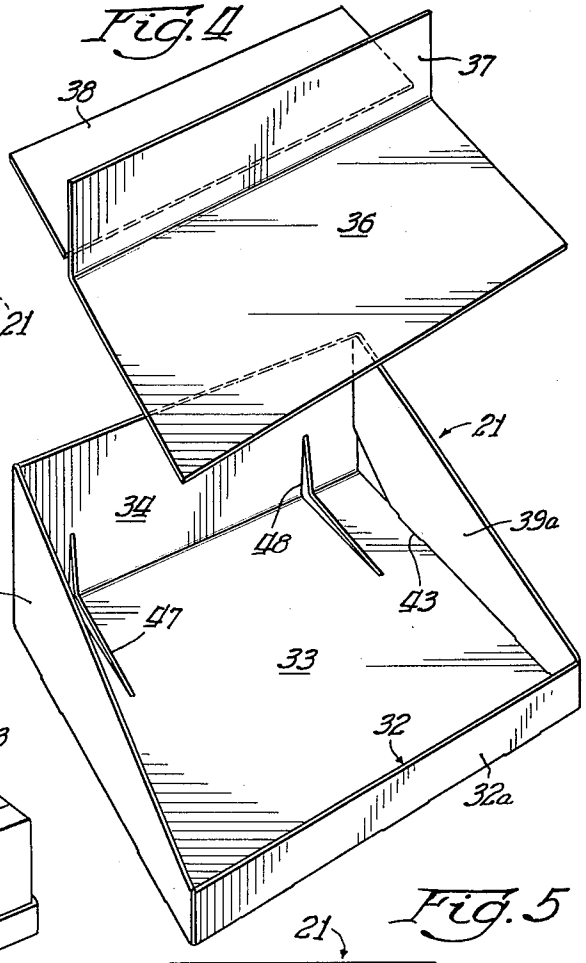

Fig. 1

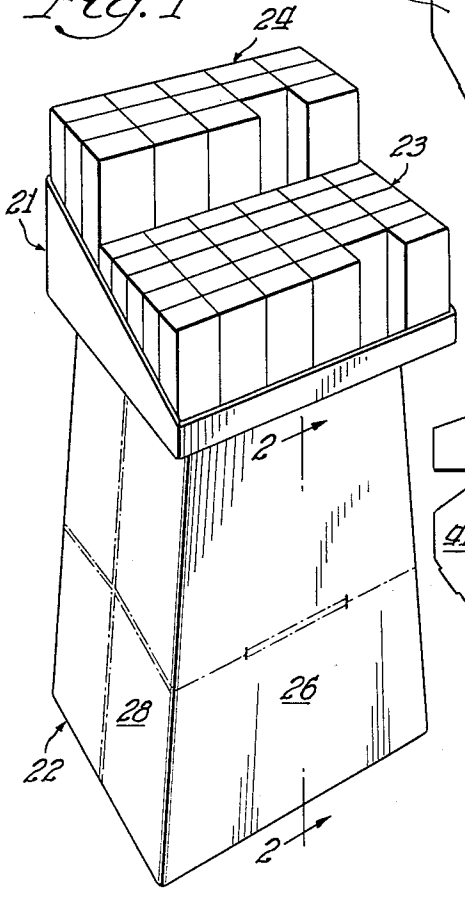

Fig. 5

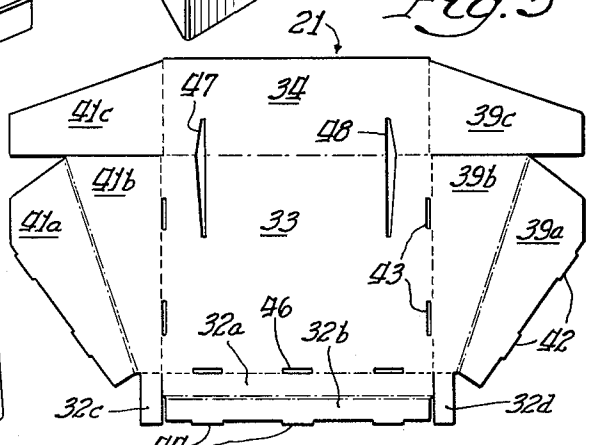

Inventor:
Ronald Taub
By: Gould Rose Atty

Jan. 5, 1965 R. H. TAUB 3,164,350

MERCHANDISE DISPLAY STAND

Filed Aug. 7, 1961 3 Sheets-Sheet 2

Fig. 3

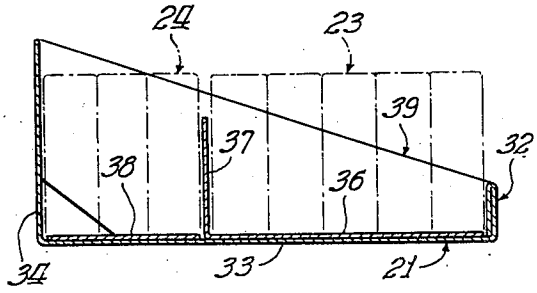

Fig. 8

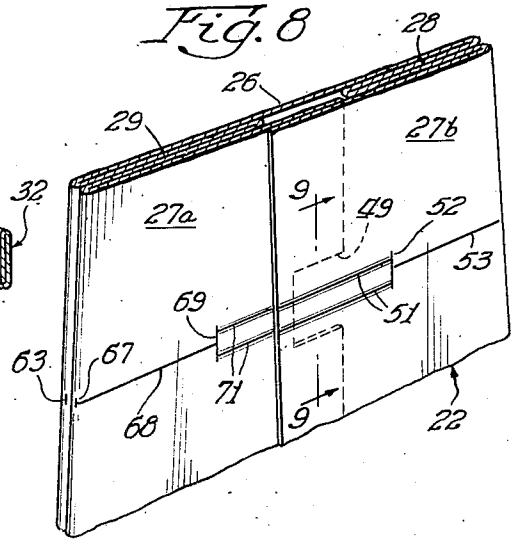

Fig. 2

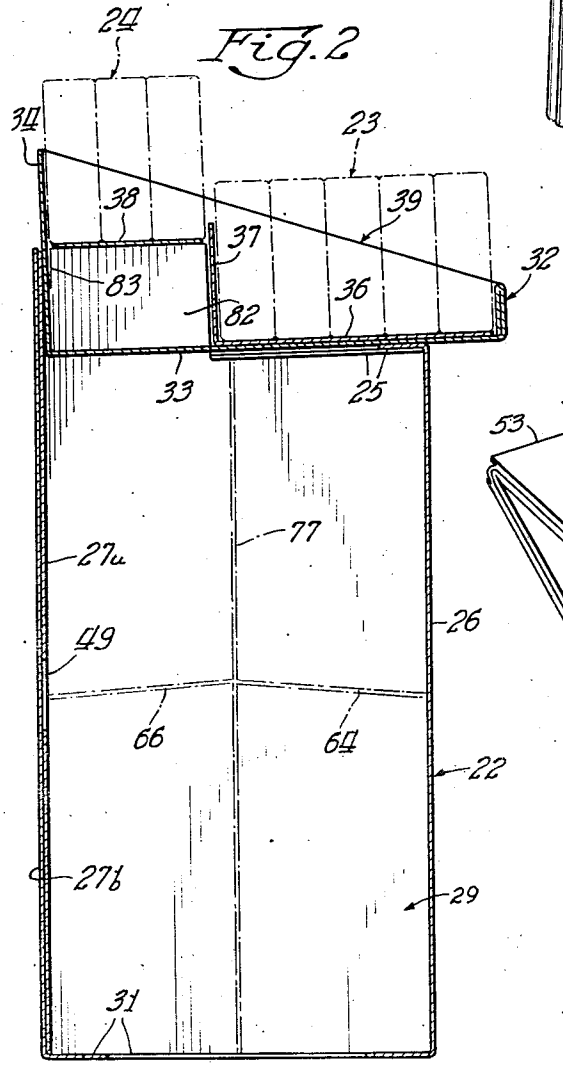

Fig. 12

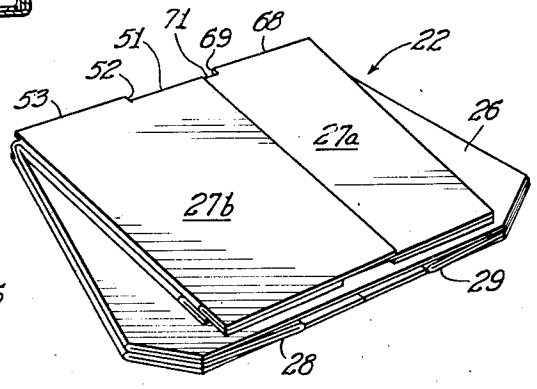

Inventor:
Ronald Taub
By: Gould Rose
Atty.

Jan. 5, 1965 R. H. TAUB 3,164,350

MERCHANDISE DISPLAY STAND

Filed Aug. 7, 1961 3 Sheets-Sheet 3

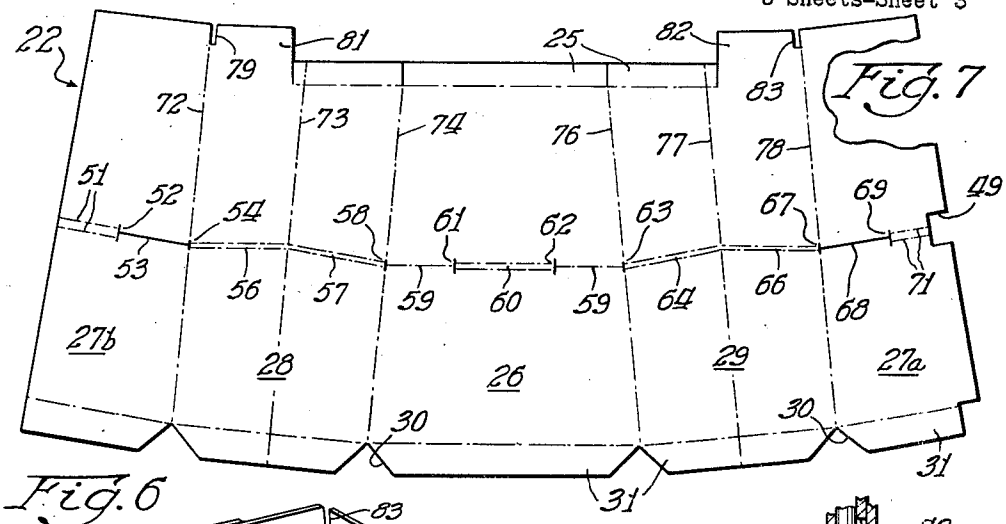

Fig. 7

Fig. 6

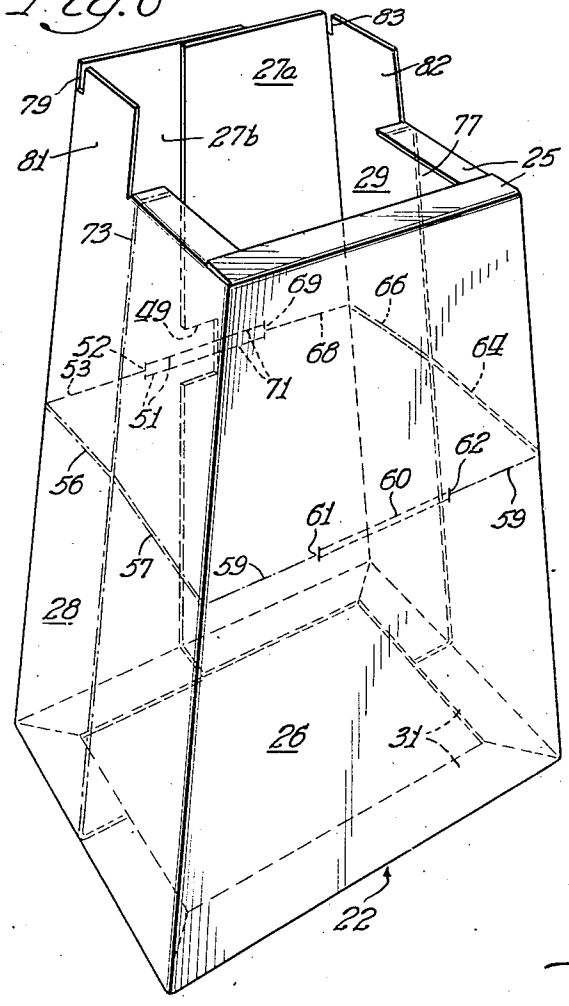

Fig. 9

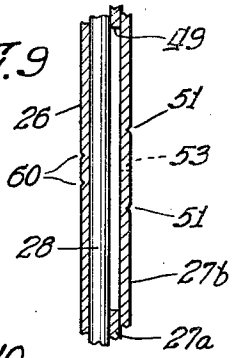

Fig. 10

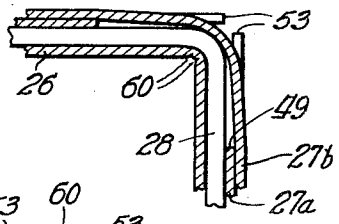

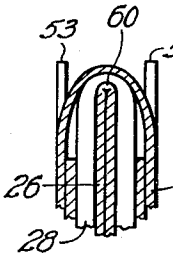

Fig. 11

Inventor:
Ronald Taub
By: Gerald Rose Atty.

United States Patent Office

3,164,350

Patented Jan. 5, 1965

3,164,350

MERCHANDISE DISPLAY STAND

Ronald H. Taub, Highland Park, Ill., assignor to Creative Displays Inc., Chicago, Ill., a corporation of Illinois

Filed Aug. 7, 1961, Ser. No. 129,853
11 Claims. (Cl. 248—174)

This invention relates to merchandise display stands, and more particularly to a novel display stand which is compact in size for shipping but which can be assembled easily to provide an attractive, durable display for point of sales merchandising. One aspect of the invention concerns the provision of a display counter which, when assembled, elevates rearward rows of packages to permit ready visibility of both rearward and forward packages. The invention also provides a means to permit collapsing of relatively large multi-layer structures made of corrugated cardboard or like material to a compact form.

In the merchandising of small packages by a retailer, there are a number of considerations that enter into an effective and satisfactory display. Perhaps of major importance is the requirement of a display device which prominently exposes advertising matter or brand names on the faces of the packages, and this is especially significant when packages in a single display may be of various types. However, display counters must of necessity have a surrounding frame or flange to retain the packages, and this covers the advertising or other insignia unless at least some of the packages are raised on steps. If such steps or platforms are made integral with the display device, it is necessary to provide blocks or fillers which occupy valuable dead space and increase the shipping bulk. On the other hand, if the steps are made collapsible, they are generally difficult for the retailers to assemble.

Another inconvenience often associated with such display devices is that they may be required to be placed on a base at table height. Where the base is constructed so as to fold, and is made of material such as corrugated cardboard, there must be provisions for imparting rigidity to the assembled base. In most instances it has not been possible to employ simple corrugated cardboard structures for this purpose, inasmuch as the base must collapse to a size such that it can be placed together with the packages and display counter in a shipping container.

It is therefore an object of the present invention to provide an expendable merchandise display stand which is exceptionally attractive and yet which is of simple, strong, and inexpensive construction. A further object is to provide a merchandise display counter capable of prominently displaying both rearward and forward rows of packages, yet which has no dead-spaces during shipment. Another object is to provide a display stand base which can be made in large sizes and which is exceptionally rigid, but which may nevertheless be collapsed and folded to compact dimensions for shipment. A more general object is to provide means for bending structures having several layers of corrugated cardboard or like material. Yet a further object is to provide a unitary container which houses an expendable merchandise display counter complete with all merchandise, together with a collapsed base, and does not have dead-spaces during shipment. A more general object is to provide an expendable and attractive display stand which can be readily assembled by an untrained merchandiser. Other and more particular objects will become evident as the description of this invention proceeds.

In accordance with the invention, there is provided a merchandise display stand comprising an open-topped box-like or trough-like counter portion which retains at least one forward row of packages and at least one rearward row of packages, and a cooperating base, the counter

desirably being provided with a movable platform or false bottom beneath the rearward row of packages, and with slits in the bottom panel of the counter under the platform. Protuberances on the cooperating base project into these slits when the counter and base are assembled so that when the counter portion is pushed down, these protuberances elevate the platform and thereby elevate and expose the rearward row of packages.

The display stand base features an improved arrangement that enables the stand to be folded to a compact form for shipment. According to a preferred embodiment, the base has front and rear walls and a pair of side walls which fold inwardly accordionwise. One of the front and rear walls has a generally horizontal longitudinally aligned cut extending on the line of fold from each lateral edge of the wall across a portion only of the wall and providing an uncut intermediate portion forming a hinge. The other of the front and rear walls has score lines along the line of fold opposite each of the cuts, and score lines opposite to the hinge. When that wall having score lines is folded inwardly in a direction away from the opposite wall, the latter's hinge constricts the wall in the region of the score lines. By this arrangement, a collapsed display stand may be folded inwardly upon itself without substantial tearing of its walls.

The invention will be described in more detail, and its advantages will become more apparent, in the ensuing description which is to be taken in connection with the accompanying drawings illustrating, by way of example, a preferred embodiment of the invention. Like elements in the several drawings are numbered identically.

FIGURE 1 is a perspective view showing the assembled merchandise stand, with its rearward rows of packages in an elevated position;

FIGURE 2 is a section of the assembled display stand, taken on line 2—2 of FIGURE 1;

FIGURE 3 is a section of the display counter alone in the condition in which it is shipped;

FIGURE 4 is an exploded perspective of the display counter showing the elevatable platform or false bottom and a divider panel;

FIGURE 5 is a blank assembled to form the major element of the display counter;

FIGURE 6 is a perspective view showing the assembled display base;

FIGURE 7 shows the blank for the display base of FIGURE 6;

FIGURE 8 shows in perspective the hinged portion of the base in the first collapsed stage;

FIGURE 9 is an enlarged sectional view, taken on line 9—9 in FIGURE 8;

FIGURE 10 is similar to FIGURE 9 and shows the base half-way through its fold;

FIGURE 11 is similar to FIGURE 9 and shows the base folded double;

FIGURE 12 is an overall perspective view of the collapsed and folded base.

FIGURE 13 depicts the combination of the invention as it is employed in conjunction with merchandise packages, all contained within an exterior shipping container.

Turning first to FIGURE 1, the assembled display stand is shown in perspective. Counter 21, atop its cooperating base 22, displays both the forward row or rows 23 of packages and the rearward row or rows 24. Base 22, which is of generally frusto-conical or columnar form, is a separable unit, and has protruding members (tabs 81 and 82 of FIGURE 6) which are received in corresponding slits (slits 47 and 48 of FIGURE 4) in the bottom of counter 21. When counter 21 is placed on the base 22, the protruding members of the base project into the counter and thereby support a movable false bottom (false bottom 38 in FIGURE 4) placed under

the rearward rows 24 of packages. Thus, when the counter is pushed down these rows are held elevated above the forward rows 23.

The entire display stand is advantageously made of the usual corrugated cardboard sheet stock, comprising two outer layers of heavy paper secured to an inside layer of heavy corrugated paper.

A side sectional view of the assembled merchandise display stand, taken on line 2—2 of FIGURE 1, is depicted in FIGURE 2, and attention is invited to this figure. Referring first to the base, it comprises front wall 26, rear wall 27 (*a* and *b*), and the inner portion of side wall 29. Some or all of these walls may contain advertising matter. Side wall 29 has a crease 77 which permits folding of side wall 29 inward accordionwise toward the viewer, and a pair of creases 66 and 64 which are employed, in a manner reserved for later discussion, in folding the collapsed display stand base 22 double upon itself for packaging. Wings 31 on the bottom edges of each wall of display stand base 29 fold inward. Wings 25, at the top edges, also fold inwardly and further strengthen the foldable side walls 28 and 29 when the display stand base is assembled.

On top of base 22 is the merchandise display stand counter 21. This has a bottom portion 33 and a surrounding frame or flange including front wall 32 and rear wall 34, and an L-shaped divider 36–37 separating forward rows of packages 23 from the rearward rows 24. Also, a false bottom 38, which may comprise one or more thicknesses of corrugated cardboard, advantageously with the corrugations at right angles to each other, rests under the rearward rows of packages 24 and holds the packages thereon elevated when tab 82, which constitutes an integral portion of side wall 29, is received into a pair of slots (47 and 48 in FIGURE 4) in the bottom portion 33 and rear wall 34 of counter 21.

A sectional side view, corresponding to the view of FIGURE 2 of the display stand counter 21 is shown in FIGURE 3. However, in this figure the base is not present, and hence false bottom 38 and its supported rearward row of packages 24 are retracted or withdrawn into shipping or pre-assembled condition. The compactness of this assembly is immediately apparent from an examination of FIGURE 3, and it is particularly noted that there is no "dead-space" to take up shipping carton volume.

FIGURE 4 shows an expanded view of the display stand counter 21. The open-top box-like or trough-like main structure, comprising bottom portion 33, front wall 32*a*, rear wall 34, and side walls 41*b* and 39*a* are evident in the drawing. In this and in ensuing discussions, the small letters "*a*," "*b*" etc. will denote one of two or more corrugated wall thicknesses; that is, for example, side wall 39 comprises an inner wall 39*a* and an outer wall 39*b* not shown in this view.

Also displayed in FIGURE 4 are the false bottom 38 and the L-shaped divider 36–37. The latter permits tab 82 (in FIGURE 2) to raise the rearward rows 24 of packages and thereupon prominently display these in relation to the forward rows 23 when the display stand counter 21 is mounted onto the display stand base 22.

The blank or layout which is folded to make up the open-top box-like portion of counter 21 is shown in FIGURE 5. It is seen in the figure that only a single piece of corrugated cardboard need be employed, and as will become apparent momentarily, can be folded simply and without need for glue, staples, or other manufacturer's attachments. The blank itself has portions which are divided by creases (i.e. score lines, kerfs, or folds), or by cuts; creases are shown by dotted lines while the cuts are shown solid. Thus, the blank includes bottom portion 33, rear wall 34, front wall 32*a* and 32*b*, side wall crossflaps 39*c* and 41*c* attached to rear wall 34, and front wall crossflaps 32*c* and 32*d* attached to side wall portions 41*b* and 39*b*.

To lock side wall portions 41*a* and 39*a* into position after the blank has been assembled, tabs 42 are provided on each of these side wall portions and register and are received by slots 43 in the bottom portion 33. Similarly, the front wall portion 32*b* is locked into place by means of tabs 44 which fit into slots 46.

Slots 47 and 48 are also provided in the bottom 33 and rear 34 walls of the blank. The inner edges, as shown, are preferably straight while the outer edges of these slots are expanded somewhat to facilitate easy insertion and to accommodate the slight inward inclinations of tabs 81 and 82 (of FIGURE 6) when the assembled counter 21 is placed atop the assembled display stand base 22.

Turning now to FIGURE 6, the assembled display stand base 22 is shown in position preparatory to receiving the assembled counter 21. This base, as noted earlier, comprises front wall 26, rear wall 27*a*–27*b*, and side walls 28 and 29. This view clearly shows the functions of bottom wings 31 in forming a rigid attractive bottom for the assembled merchandise display stand, and of the corresponding top wings 25 in forming a sturdy shelf for the counter 21. The function of tabs 81 and 82, which are integral parts of side walls 28 and 29 respectively, are likewise illustrated; these tabs have notches 79 and 83, respectively, which engage rear wall 34 of counter 21 (see FIGURE 4) and thereby prevent displacement of the counter once it has been assembled onto the base 22.

The functions of the several substantially horizontal creases and cuts around the middle of all walls of base 22 can be mentioned briefly at this point, although details of these functions will be reserved for FIGURES 7 through 12. Front wall 26 has a substantially horizontal crease formed by crease 59 and 60 between lateral edges and dividing the wall 26 into upper and lower sections; crease 59 extends from each edge of front wall 22 and is preferably a single crease, while crease 60 is preferably a multiple, e.g. double, crease and extends between the two halves of crease 59. On rear wall 27*a*–27*b* is a hinge-like portion which may have two or more widely spaced creases 51–71 between cut 53 on rear wall portion 27*b* and cut 68 on rear wall portion 27*a*. These cuts similarly extend from the respective lateral edges of rear wall 27*a*–27*b* and are preferably substantially coextensive in length with the corresponding creases 59 on front wall 26. A segment 49 is cut from rear wall portion 27*a* to provide only a single thickness of corrugated cardboard in the region of this hinge.

In order to avoid or minimize tearing at the junctures of creases 59 and 60 on front wall 26 and of 53–68 and 51–71 on rear wall 27*a*–27*b*, transverse slits 61 and 62 on front wall 26 and slits 52 and 69 on rear wall 27*a*–27*b* may be provided. These serve to avoid localized stresses on the cardboard when display stand base 26 is collapsed and folded double upon itself.

Referring to FIGURE 7, a blank or layout of the base 22 is shown prior to assembly. The viewer is looking onto what will be the outward surface display stand base 22. Front wall 26 and the two halves 27*a* and 27*b* of rear wall 27, are as shown in FIGURE 6, quadrilaterals, specifically equilateral trapezoids, while the side walls 28 and 29 are approximately rectangular. Each of the respective walls is provided with bottom wings 31, the corners of which are mitred at 30 so that the assembled base has a flat bottom.

Front wall 26 has, as discussed in connection with FIGURE 6, an approximately horizontal crease or score line comprising portions 59 which extend from lateral edges 74 and 76 to a central crease 60; preferably crease 60 is two or more parallel creases while crease 59 need by only a single crease, but may be likewise two or more creases. On rear wall portions 27*a* and 27*b*, respectively, are cuts 68 and 53, each extending from edge 78 and 72 respectively, and a central hinge-like portion which may be formed by optional creases 71 and 51, again respec-

tively on the two halves of the rear wall 27. Crease 60 may be substantially coextensive with this hinge-like portion; i.e. they are about equal in length, preferably exactly equal but advantageously one is not more than a half inch or so longer than the other. By means of this construction, the hinge-like portion will tend to compress only the region of crease 60.

Side walls 28 and 29 are centrally divided by creases 73 and 77, respectively, which extend completely through wings 31 and 25. In turn, when these wings are folded, they prevent side walls 28 and 29 from re-collapsing.

As noted earlier, a series of cuts transverse, and preferably perpendicular, to the respective creases may be provided so as to avoid or minimize tearing of the corrugated walls when the display stand base 22 is collapsed and folded for shipment. It has been found from experience that when the corrugated board is approximately ⅛" thick, cuts 54, 58, 61, 62, 63 and 67 are advantageously about ½" long while cuts 52 and 69 are approximately 1" in length. Also, if two creases 60 are used, they may be spaced 3/16" apart; spacing of multiple creases 51 and 71, if these are employed, may be about ½".

From the position of the viewer, edge creases 72, 74, 76, and 78 are on the reverse side of the blank, as are the creases which define wings 31 and 25. Edge creases 73 and 77 are on the surface facing the viewer. Central creases 59 and 60 also face the viewer, while creases 56, 57, 64, and 66, each of which may be one or a plurality of creases, may be on either side.

Only a single gluing, stapling, or similar attaching procedure need be made by the manufacturer to join the edges of rear wall portions 27*a* and 27*b* to form rear wall 27 of display stand base 22. It will be evident that this is a substantial improvement over many similar bases, which require several manufacturer's joints.

FIGURE 8 shows an enlarged view of the assembled and collapsed display stand base 22. It will be seen that side walls 29 have been folded inward accordionwise to form a flat package; wings 31 and 25 (of FIGURE 7) will be extended when the base is collapsed. Cuts 68 and 53 in rear wall portions 27*a* and 27*b* respectively are clearly shown in this view, as is the hinge-like portion of rear wall 27 which remains after the cuts have been made. It will also be noted that cutout 49 removes all but a small thickness of double wall in the region of the hinge portion defined by creases 71 and 51 and cuts 68 and 53.

When the assembled and collapsed display stand base 22 is to be folded inward upon itself in a direction away from the viewer, a series of actions occurs which is best depicted with reference to FIGURES 9, 10, and 11, and accordingly attention is invited first to FIGURE 9.

In this figure, which is a sectional view taken through lines 9—9 of FIGURE 8, may be seen front wall 26 with its double creased portion defined by creases 60, and rear wall 27*a*–27*b* with its doubly creased matching portion defined by creases 51. Cut 53 appears as a dotted line in this view of rear wall 27*a*–27*b*, while the inwardly folded edge 27 or side wall portion 28 is also shown. FIGURE 9 depicts the display stand base folding joint before folding begins, and to view the joint as folding commences, attention is invited to FIGURE 10.

In FIGURE 10, folding of the base 22 inwardly upon itself, i.e. doubling it over, is accompanied by a collapsing of the portion of front wall 26 defined by adjacent creases 60. The hinge defined by creases 51 (which disappear once folding commences) forces the region of front wall 26 near double creases 60 to contract, and at the same time tension is applied to the hinge portion (formerly defined by creases 51) of rear wall portion 27*b*.

When the entire display stand base has been doubled over, the view of FIGURE 11 is obtained. That region of rear wall portion 27*b* which has been cut by cut 53 separates cleanly, while the region of rear wall portion 27*b* formerly defined by double creases 51 acts as a hinge, collapsing the inner region of front wall 26 in the region of double creases 60. As a result, this latter region is constricted in volume, and in effect retracts so as to permit facile folding of the rear wall hinged portion.

An overall view of the collapsed and doubled over display stand base is shown in FIGURE 12, and attention is directed to this figure. Here it is seen that the complete display stand base can be collapsed inward by accordionwise folding of side walls 28 and 29 and doubled over upon itself by means of the center crease arrangement described earlier. The compactness of the resultant base, in relation to the comparatively large size of the assembled base, constitutes a major advantageous feature of the invention.

Full advantage is taken of the collapsible feature of the base, as well as the retractable feature of the display stand counter 21, when the completed stand, together with rows of packages 23 and 24 is assembled within an exterior shipping container 84, as shown in FIGURE 13. Base 22 may be placed on the bottom or the top of counter 21, and the whole forms a compact package for low-volume shipment, as well as for convenient assembly by untrained vendors.

Upon receiving a complete package containing counter, base, and individual merchandise packages, as shown on FIGURE 13, the vendor or distributor need only perform a few simple operations to assemble the complete merchandise display stand. First, the entire counter 21 and collapsed and folded base 22 are removed from the outer shipping container 84. Then, in the manner shown by FIGURE 6, the base is assembled; it is particularly noted that the vendor or distributor need not fasten any joints or become involved in any elaborate assembly operation beyond mere unfolding and expanding the base and folding wings 31 and 25 inward. Finally, and without any more, counter 21 with its contained rows of merchandise is placed atop the base in the manner of FIGURE 1 and pressed down, whereupon the rearward rows of packages are elevated into prominent display for easy observation by the consumer. This ease of assembly is markedly improved over virtually all prior art devices of similar nature, and although compact for shipment, the assembled device is extremely rigid, attractive, and practical.

Numerous other advantages of the device will be apparent from the foregoing description or from an inspection of the completed device. For example, packages of different types can frequently be accommodated in a single display stand, and various forms of advertising matter can be applied to the several walls of both the base and the counter.

In addition, the inventive design accommodates itself to numerous other uses and modifications. For example, merely by changing the dimensions of false bottom or platform 38 and optional spacer or divider 36–37, different sizes of packages can be accommodated. Also, by providing a plurality of false bottoms and dividers, as well as several step-like tabs 81 and 82, more than two rows of packages may be employed, and all rows behind the first can similarly be elevated. In addition, several folds may be provided in the base so that bases of extremely large size—up to four or five feet or even more in height—may be obtained in a single, compact, structure.

While the invention has been described in considerable detail in conjunction with a specific embodiment thereof, it will be apparent that numerous alternatives, modifications, and variations will be apparent to those skilled in the art in light of the foregoing description. Additionally, the individual elements of the inventive merchandise display stand can be used independently, e.g. the base may be used with other counters and the counters with other base designs. Accordingly, it is intended to embrace all such alternatives, modifications, and variations, as well as independent uses of the foregoing ele-

ments as fall within the spirit and broad scope of the appended claims.

I claim:

1. In a collapsible display stand base of the type having front and rear walls and a pair of side walls foldable inwardly accordionwise, the improvement enabling multiple corrugated cardboard walls of the collapsed display stand to be folded over which comprises: one of said front and rear walls having generally horizontal longitudinally aligned cuts extending from the lateral edges of said wall across a portion only of said wall and dividing said wall into an upper and a lower section, the uncut intermediate portion thereby forming a hinge; and the other of said front and rear walls having at least one score line adjacent to and substantially coextensive with said cuts and a pair of parallel score lines adjacent to and substantially coextensive with said hinge, whereby folding said structure so that the hinge is on the outside causes the cardboard portion defined by said parallel score lines to collapse and thereby constrict in volume.

2. In a multiwall structure of the type formed of corrugated cardboard and having at least front and rear walls, the improvement enabling adjacent multiple corrugated cardboard walls of the structure to be doubled over which comprises: one of said walls having generally horizontal longitudinally aligned cuts extending from the lateral edges across a portion only of said wall, the uncut intermediate portion forming a hinge, and the other of said walls having at least one score line adjacent the said cuts and a pair of parallel score lines adjacent said hinge, whereby folding said structure so that the hinge is on the outside causes the cardboard portion defined by said parallel score lines to collapse and thereby constrict in volume.

3. A cardboard display device for retaining a plurality of packages in a non-elevated position for shipment without dead spaces and for elevating some of said packages for prominent display, comprising: a cardboard open-topped box-like structure having side walls and a generally flat bottom, said bottom having projection-receiving cut-out portions therein, a false bottom covering a portion of said bottom and extending over said cut-out portions to receive packages thereon, a collapsible cardboard base supporting said box-like structure from below and having upward-extending projections on the top thereof for entering said cut-out portions of said bottom, said projections raising said false bottom and thereby raising the packages disposed on said false bottom from their non-elevated shipment position to an elevated display position.

4. A cardboard merchandise display device for retaining a plurality of packages in a non-elevated position for shipment without dead spaces and for elevating some of said packages for prominent display, comprising: a cardboard open-topped box-like structure having side walls and a bottom, said bottom having projection-receiving cut-out portions therein, and a cardboard base supporting said box-like structure from below and having upward-extending portions thereon, said upward-extending portions protruding through said bottom to elevate the packages above said cut-out portion from their non-elevated shipment position to an elevated display position.

5. A cardboard merchandise display device for retaining a plurality of packages in a non-elevated position for shipment without dead spaces and elevating some of said packages for prominent display, comprising: a cardboard open-topped box having side walls and a bottom, said bottom having projection-receiving cut-out portions therein, a false bottom covering a portion of said bottom and extending over said cut-out portions to receive packages thereon, a collapsible cardboard base supporting said box-like structure from below and having upward-extending projections thereon, said upward-extending projections protruding through said bottom to elevate said false bottom and thereby elevate the packages disposed on said false bottom from their non-elevated shipment position to an elevated display position.

6. A cardboard merchandise display device for retaining a plurality of packages of merchandise in a non-elevated position for shipment without dead spaces and for elevating some of said packages for prominent display, comprising: a cardboard open-topped box-like structure adapted to retain said packages and having side walls and a generally flat bottom, said bottom having projection-receiving cut-out portions therein disposed below the packages to be elevated, and a cooperating base supporting said box-like structure from below and having upward-extending projections on the top thereof for entering said projection-receiving cut-out portions of said bottom, said projections protruding through said cut-out portions and elevating the packages disposed above cut-out portions from their non-elevated shipment position to the elevated display position.

7. A combined merchandise packing and display device comprising an exterior shipping container containing merchandise packages together with the merchandise display device of claim 6, the base thereof being collapsed and disposed within said shipping container.

8. The merchandise display device of claim 6 having a false bottom extending over said projection-receiving cut-out portions and adapted to receive packages thereon, whereby said projections projecting through the projection-receiving cut-out portions engage and support the false bottom in elevated position.

9. The merchandise display device of claim 6 wherein said base comprises a tubular member generally rectangular in cross section and having a step portion to support said structure, and having the rearward wall and portions of the side walls extending above the step portion, the side wall portions being adapted to enter said projection-receiving cut-out portions, there being notches at the junctures of the side wall portions and rear wall to permit the rear wall to overlap the rear of the structure.

10. The merchandise display device of claim 9 wherein said base has inwardly bending flanges at the bottom to maintain the tubular member against collapse.

11. The base of claim 8 including inwardly foldable wings on adjacent ends of said side walls whereby folding of said wings when said display stand is assembled imparts rigidity to said side walls.

References Cited by the Examiner

UNITED STATES PATENTS

1,103,286	7/14	Hallett	248—174
1,771,760	7/30	MacLellan	229—6
2,141,216	12/38	Mancuso	108—100 X
2,229,257	1/41	Reaume	248—174
2,430,166	11/47	Fish	211—130
2,713,984	7/55	Paige	248—174
2,745,543	5/56	Broderick	206—45
2,797,815	7/57	Gorman	211—72
2,940,710	6/60	Adams	248—174

CLAUDE A. LE ROY, *Primary Examiner.*

ROBERT C. RIORDON, FRANK L. ABBOTT, *Examiners.*