(No Model.)

A. B. LANDIS.

SET WORKS FOR SAW MILLS.

No. 359,264. Patented Mar. 15, 1887.

Fig. 1.

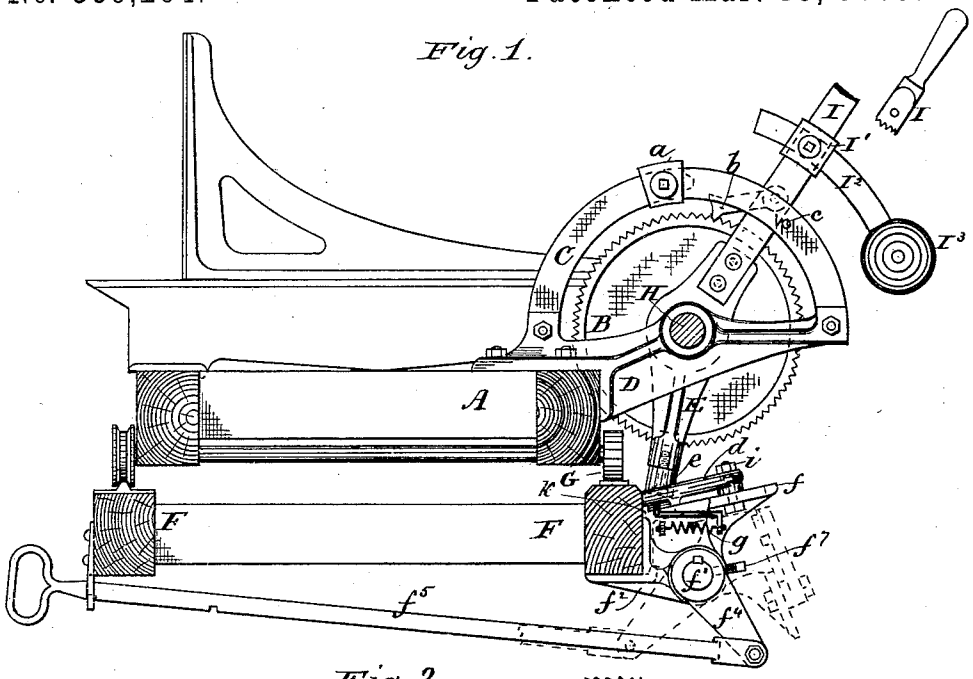

Fig. 2.

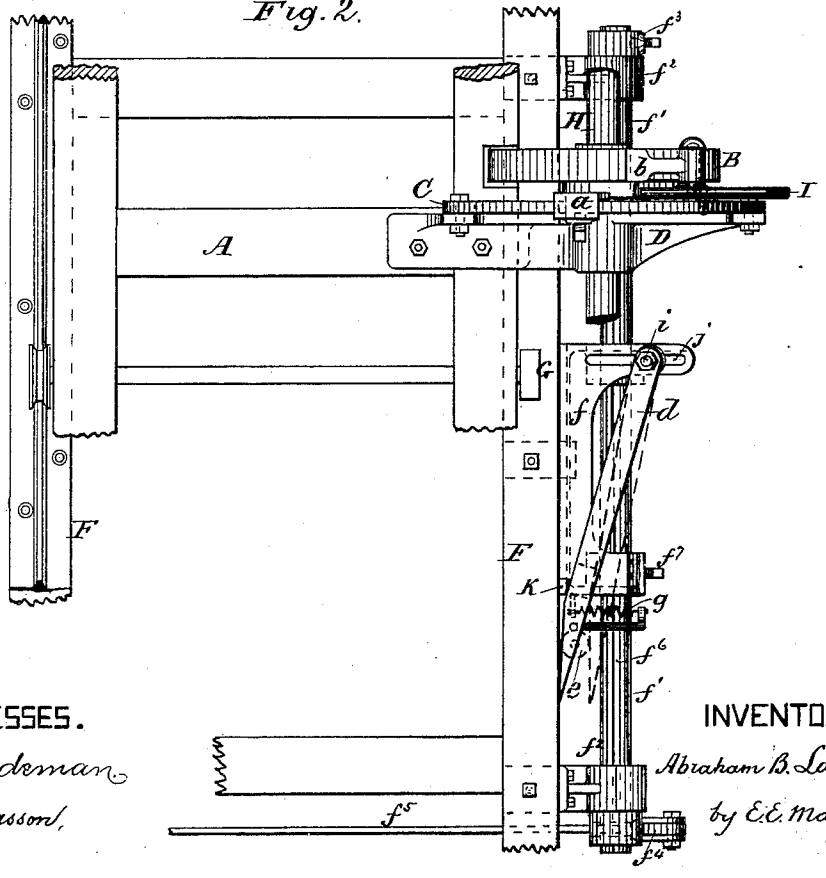

WITNESSES.

E. C. Burdeman

I. J. Masson,

INVENTOR.

Abraham B. Landis

by E. E. Masson atty.

N. PETERS, Photo-Lithographer, Washington, D. C.

UNITED STATES PATENT OFFICE.

ABRAHAM B. LANDIS, OF WAYNESBOROUGH, PENNSYLVANIA.

SET-WORKS FOR SAW-MILLS.

SPECIFICATION forming part of Letters Patent No. 359,264, dated March 15, 1887.

Application filed November 27, 1886. Serial No. 220,021. (No model.)

To all whom it may concern:

Be it known that I, ABRAHAM B. LANDIS, a citizen of the United States, residing at Waynesborough, in the county of Franklin and State of Pennsylvania, have invented certain new and useful Improvements in Set-Works for Saw-Mills, of which the following is a specification, reference being had therein to the accompanying drawings.

The object of this improvement is to provide simple and effective means to move a log laterally toward the saw, either automatically or by hand, and retain it in the set position. I accomplish these objects by the construction illustrated in the accompanying drawings, in which—

Figure 1 is a sectional end view of a carriage and ways provided with set-works constructed in accordance with my invention. Fig. 2 is a top view of the same connected to a portion of the carriage and ways.

In said drawings, A represents the carriage, and F the ways having suitable rails thereon to guide the wheels G of the carriage. To the side of this carriage are attached brackets D, having bearings for the shaft H, ordinarily used to connect the head-blocks of saw-mills and impart a simultaneous movement to the knees used for setting the log. Upon this shaft is secured the ratchet-wheel B, and alongside of said wheel is loosely mounted upon the shaft H the hand-lever I, having pivoted thereto the pawl *b*, engaging with the teeth of said ratchet-wheel. To the carriage A is secured alongside of the lever I a quadrant, C, upon which is mounted adjustably a stop, *a*, to arrest said lever in one direction, and also a pin, *c*, for the lever to drop against.

The above-described mechanism forms the ordinary hand set-work. My invention consists in converting this hand set-work into an automatic set-work without materially increasing its number of parts and still retain the simple hand-set to be used at will. For this purpose the casting or arm E at the lower end of the lever I is extended below the periphery of the ratchet-wheel, and the lower end of said extension is preferably provided with a friction-roller, *e*.

Upon the grooved shaft f' is adjustably secured a casting, *f*, having arms, to one of which is pivoted adjustably at *i* one end of the bar *d*, having its opposite end cut at an acute angle and bearing against the side of one of the ways F, the bar *d* forming also an acute angle with said ways, so that when the carriage recedes from the saw the roller *e* enters between one of the ways and the bar *d*, and, pressing said bar laterally, passes between them. The bar swings as shown by dotted lines in Fig. 2; but the coiled spring *g* brings its beveled end back against the ways after the roller *e* has passed, as said spring has one end secured to the casting *f* and the other end to an arm projecting laterally from the bar *d*. When the carriage is reversed, the roller *e* runs along the incline or outside of the bar *d* to the pivotal point *i*, which is properly set to throw the lever I against the stop *a*. Said stop is set upon the quadrant C at the proper point to give the correct advance to the log or a suitable thickness sawed off. The slot *j* in the long arm of the casting *f* permits the pivotal point *i* to be changed, and consequently permits the bar *d* to be set at a suitable angle. After the lower end of the lever I or its roller *e* has passed the pivotal point *i* it drops back by gravity against the pin *c*, projecting from the side of the quadrant. To facilitate this dropping by gravity of the lever I, said lever has mounted thereon a slotted block, I′, to adjustably receive the curved bar I^2, on the outer end of which is a weight, I^3. This curved bar and weight are desirable when large settings are to be made, in which cases the lever I falls against the stop *a* in a position beyond the perpendicular; but in cases of small amount of setting the weight can be dispensed with.

To permit the automatic setting device to be thrown out of action, when desired by the operator, from the front of the machine, and thus have a plain hand setting arrangement, a hand-rod, f^5, extending across the machine, is pivoted to a crank, f^4, secured on the end of the shaft f', carried in bearings f^2, secured to the side of the ways F. This shaft f' has a keyway, f^6, its entire length, and a key in the bosses of the head or casting *f* entering said keyway prevents said casting from turning on the shaft f', but allows it to be slid lengthwise thereon to suit different lengths of lumber, said shaft being of sufficient length for that purpose. A set-screw, f^7, prevents the head *f* from sliding after it has been set in po-

sition. If the operator draws upon the rod f^5 by means of its handle, the head f, with its angularly-set bar d, is thrown down into the position shown in dotted lines in Fig. 1, and is thus entirely out of the way of the roller e when the device is to be set by hand. The bar d might be thrown back without the rod f^5 and the device above described, so as to allow the carriage to move back and forth without setting the log; but when the carriage would stop with the lever I directly over the head f the bar d would interfere with the hand-setting. It is consequently important to have said head entirely out of the way. This head f has a lug, K, projecting from its top, to serve as a stop for the bar d and prevent it from being drawn back too far by the spring g when the automatic set is thrown out of action.

The stop a on the quadrant forms the stop for the automatic as well as for the hand set. The joint i on the bar d is set against the roller e when the lever I is against the stop a, so that the accurate setting depends only on the proper setting of the stop-block a. The setting of the log can thus be done on the forward movement of the carriage, which movement is slow and much more desirable than on the backing movement, which is very quick, and thus a more accurate setting will be obtained without racking the parts.

Having now fully described my invention, I claim—

1. The combination of a log-carriage, its quadrant C and adjustable stop thereon, the shaft H and ratchet-wheel, and the lever I, pivoted on said shaft and having an arm extending under said shaft, with the carriage-ways, a shaft retained in bearings attached to said ways, the head f, adjustably secured upon said shaft, and the bar d, substantially as and for the purpose described.

2. The combination of a log-carriage, the upper shaft, H, its ratchet-wheel, and lever I, pivoted thereon and having an arm extending under said shaft, with the carriage-ways, the lower shaft retained in bearings attached to said ways and provided with a crank, the head f, adjustably secured upon said shaft, the bar d, pivoted adjustably upon said head, and the handle-rod f^5, pivoted to the crank of the lower shaft, substantially as and for the purpose described.

In testimony whereof I affix my signature in presence of two witnesses.

ABRAHAM B. LANDIS.

Witnesses:
D. M. GOOD, Jr.,
D. C. MEYER.