Sept. 8, 1942. T. C. SCHENK 2,295,238

SWITCH

Filed Sept. 26, 1941

Fig. 1.

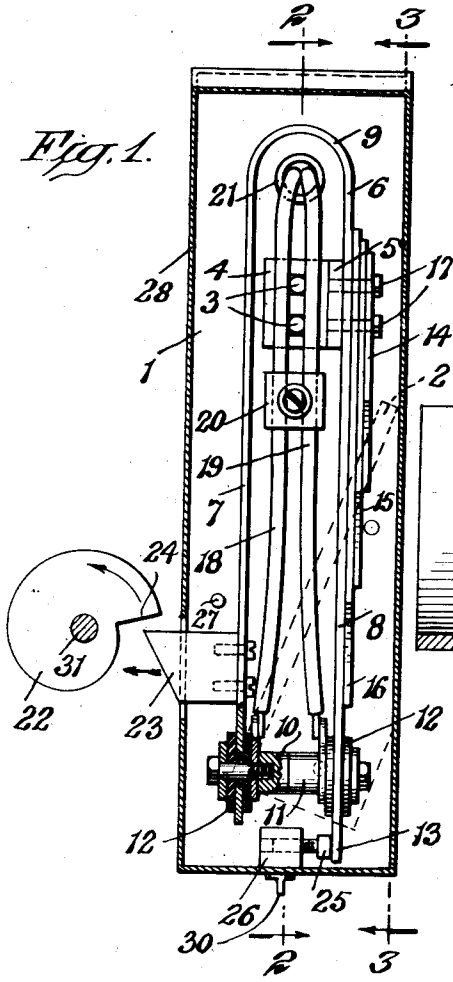

Fig. 2.

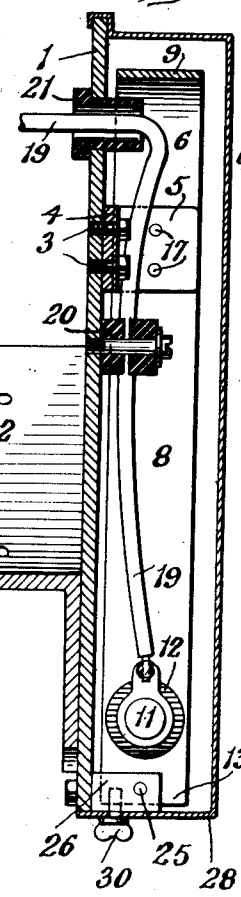

Fig. 3.

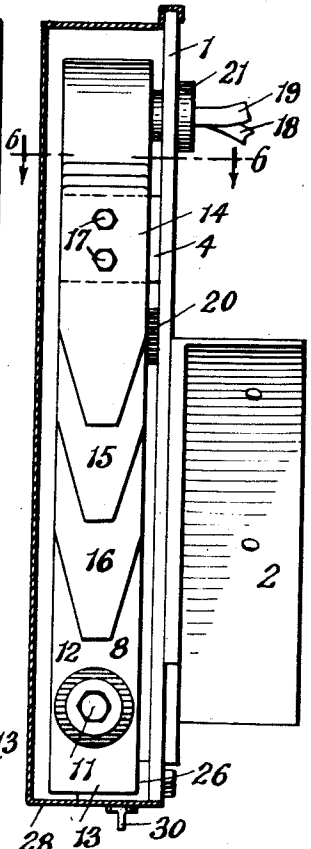

Fig. 4.

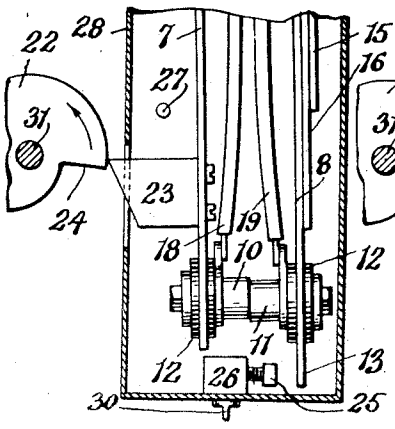

Fig. 5.

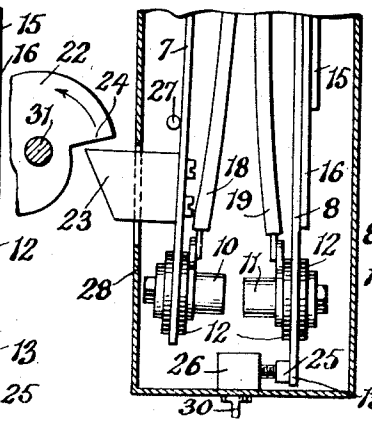

Fig. 6.

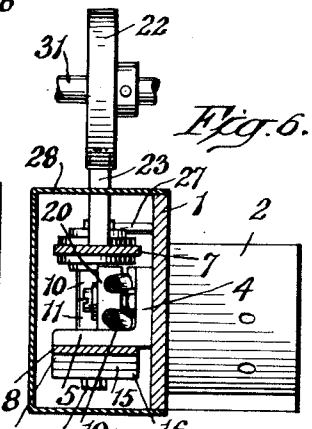

INVENTOR

Tamis C. Schenk

BY

Harry Ratzinsky

ATTORNEY

Patented Sept. 8, 1942 2,295,238

UNITED STATES PATENT OFFICE

2,295,238

SWITCH

Tamis C. Schenk, Brooklyn, N. Y., assignor to Richmond Screw Anchor Co., Inc., Brooklyn, N. Y., a corporation of New York

Application September 26, 1941, Serial No. 412,418

1 Claim. (Cl. 200—30)

This invention relates to switches or circuit breakers, and more particularly to those adopted for use in welding machines and in other electrical apparatus wherein current of relatively high amperage is carried and it is highly desirable to materially reduce the possibility of arcing of the current across the contacts of the switch, particularly when breaking of the circuit occurs.

The object of the invention is to provide a switch or circuit breaker of this character wherein a snap action occurs at the breaking of the circuit and arcing, and accordingly rapid deterioration, of the contacts is prevented.

More particularly the invention contemplates the provision of a pair of contact members, each of which is carried on a spring support, one of said spring supports being of greater resilient resistance than the other, the contacts being normally separated and being forced into abutment by intermittently operating cam or other activating means, said means also acting to simultaneously flex both spring supports, the return movement of one of said spring supports being abruptly halted at a predetermined point by a suitably positioned stop, the abrupt halt of said spring support and the contact carried thereby causing the second spring support and its contact to be projected away from the halted contact whereby an extremely sharp break of the circuit between the two contacts is assured.

In the accompanying drawing, wherein an embodiment of the invention is disclosed, Fig. 1 is a plan view, with the cam or housing in section, of the improved switch or circuit breaker, other parts being also shown in section to disclose construction, the contacts being shown just about to break circuit; Fig. 2 is a sectional view on the line 2—2 of Fig. 1, looking in the direction of the arrows; Fig. 3 is a sectional view on the line 3—3 of Fig. 1, looking in the direction of the arrows; Figs. 4 and 5 are views showing the switch in closed and open positions respectively, and Fig. 6 is a sectional view on the line 6—6 of Fig. 3, looking in the direction of the arrows.

The switch hereinafter described, while particularly adapted for welding machines and other electrical apparatus wherein relatively high amperage is employed, may be used in many environments, particularly where a sharp and quick interruption of current flow is desirable whereby arcing across the contacts of the switch is either completely eliminated or materially reduced and thus the life of the contacts greatly increased.

In the structure disclosed, 1 indicates a suitable base member secured by a bracket 2 to a portion of the welding machine or other apparatus of which the switch forms a part. Secured to the base 1 by screws 3, is a bracket 4 having a projecting portion 5 to which is attached a U-shaped spring member 6. The shape of said spring member 6 is such that it provides the two flexible leg portions 7 and 8 integrally connected at one end by the loop portion 9. Each of these leg portions 7 and 8 constitutes a flexible spring support for a contact member, that carried by the leg portion 7 being indicated at 10, while that carried by the leg portion 8 being indicated at 11. Both contacts are insulated from the spring legs 7 and 8 by insulation indicated at 12.

The spring leg portion 8, has its free end 13 extending beyond the contact 11, so that the effective length of the leg portion 8 is greater than that of the leg portion 7, said leg portion 8 being reinforced by several spring leaves, said leaves, as well as the U-shaped spring 6, being secured to the portion 5 of bracket 4 by means of the screws 17. These several spring leaves 14, 15 and 16, overlying the spring leg 8 increase the resistance of the spring leg 8 to flexure.

Contacts 10 and 13 are respectively connected to the wires 18 and 19 which are confined under the clamp 20 and pass through insulated bushing 21 to the apparatus, one of these wires extending from the current source to the contact to which it is connected, the other extending from its contact to the point of connection into the apparatus operated by the current conveyed to it. As shown in Fig. 5, the contacts 10 and 11 are normally separated so that the circuit between the wires 18 and 19 is broken. By suitable means, to be described, spring leg 7 is sprung to the right (as viewed in Fig. 4) so that its contact 10 is brought into abutment with contact 11 and the circuit is thus closed. The spring leg 7 may be thus flexed by a number of devices, an example thereof being shown in the drawing, wherein 31 indicates a rotated shaft upon which a cam 22 is mounted. Said cam is operative against a lug 23 secured on and projecting from the face of the spring leg 7.

As the cam 22 is rotated the higher portion thereof, operative upon the lug 23, will flex the spring leg 7 to the right, causing contact 10, carried thereby, to abut against contact 11, thus closing the circuit between the two contacts. As movement of the spring leg 7 to the right continues, it will flex the spring leg 8 and overlying leaves 14, 15 and 16 also to the right, until the shoulder 24 on the cam 22 is reached. When this

point is reached, flexure of the two spring portions 7 and 8 will be abruptly discontinued and said springs will at once swing to the left on return movement. On such return movement, the projecting end portion 13 of spring leg 8 will impinge against an adjustable stop member 25 secured in member 26 mounted on the base member 1, as shown in Fig. 1. The impingement of the spring leg 8 against the stop 25 causes said spring leg to abruptly halt its further movement toward the left while spring leg 7 continues its further movement in that direction until halted by stop pin 27. The sudden stoppage of the leg 8 on its return movement, causes the leg 7 to be smartly propelled away from it and consequently a very abrupt and sudden breaking of the electrical circuit between contacts 10 and 11 occurs, with very little, if any, arcing between the contacts taking place.

In the normal set-up, the spring leg 8 is held in slightly flexed condition or under tension against stop 25, while in the inoperative or open position of the switch as in Fig. 5, so that said leg 8 on its return movement, after having been flexed, will be brought forcibly in contact with the stop 25 and the leg portion 7 will be projected away from it when the sudden halt of the spring leg 8, by its impact against the stop 25, occurs.

The various parts of the switch may be protected by encasement in a suitable housing or cover 28 held in place by means of the wing-screw 30.

From the foregoing, the operation of the switch will be entirely clear. While lug 23 is off the high portion of the cam, the contacts 10 and 11 will be spaced apart, and the circuit open, as shown in Fig. 5. When the cam rotates, the high portion thereof will flex spring leg 7 to the right, causing contact 10 to be brought against contact 11 and the circuit closed. Further flexing of leg 7 to the right by pressure of the cam, causes leg 8 to be flexed in the same direction and forced away from stop 25. When the step or shoulder 24 of the cam is reached, pressure on the spring leg 7 is discontinued and the spring leg 7 and leg 8 will at once spring to the left under the combined force exerted by the several springs 7, 8, 14, 15 and 16. The end portion of the leg 8 forcibly comes into contact with stop 25 as shown in Fig. 1, thus halting further movement of spring leg 8 to the left. The forcible contact of the spring leg 8 with the stop causes the leg 7 to be sprung away from the leg 8 so that the contacts 10 and 11 are separated instantaneously and arcing across the contacts is greatly reduced or completely eliminated.

What I claim is:

In a switch, a base member, a U-shaped spring located above said base member, said spring consisting of a pair of spaced parallel legs integrally connected by a loop portion, a support secured to the base and having a projecting part disposed between the legs of the spring, said projecting part being secured to one of the legs, the leg to which said projecting part is secured being reinforced and stiffened by additional leaves secured to overlie said leg by the means attaching the same to the support, the reinforced leg having at least one leaf extending beyond the end of the other leg, an adjustable stop member secured upon the support and positioned to receive the impact of the extending portion of the reinforced leg and thereby limit the movement of the reinforced leg in one direction, each of the legs being provided with a contact, said contacts being normally located in separated relationship, and means operative upon the short leg to cause the contact carried thereby to be moved into abutment with the contact carried by the other leg and then both legs to be flexed.

TAMIS C. SCHENK.