F. GRAFFENBERGER.

PITMAN.

APPLICATION FILED MAR. 1, 1915.

1,188,268.

Patented June 20, 1916.

2 SHEETS—SHEET 1.

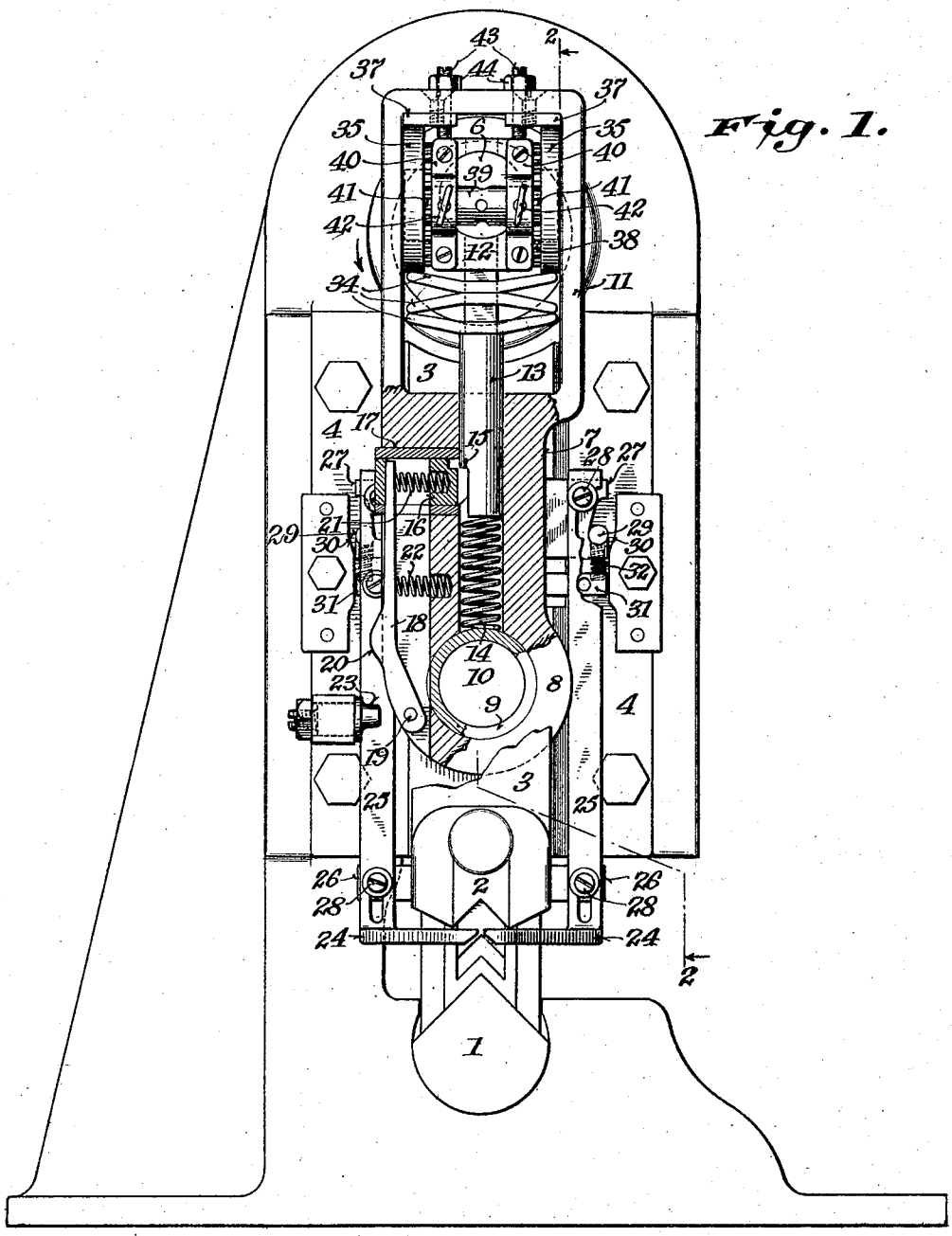

Fig. 1.

Witnesses:
Fred Palm
Chas. L. Goss.

Inventor:
Friedrich Graffenberger,
By Flanders Bottum Fawcett & Bottum
Attorneys.

F. GRAFFENBERGER.

PITMAN.

APPLICATION FILED MAR. 1, 1915.

1,188,268.

Patented June 20, 1916.

2 SHEETS—SHEET 2.

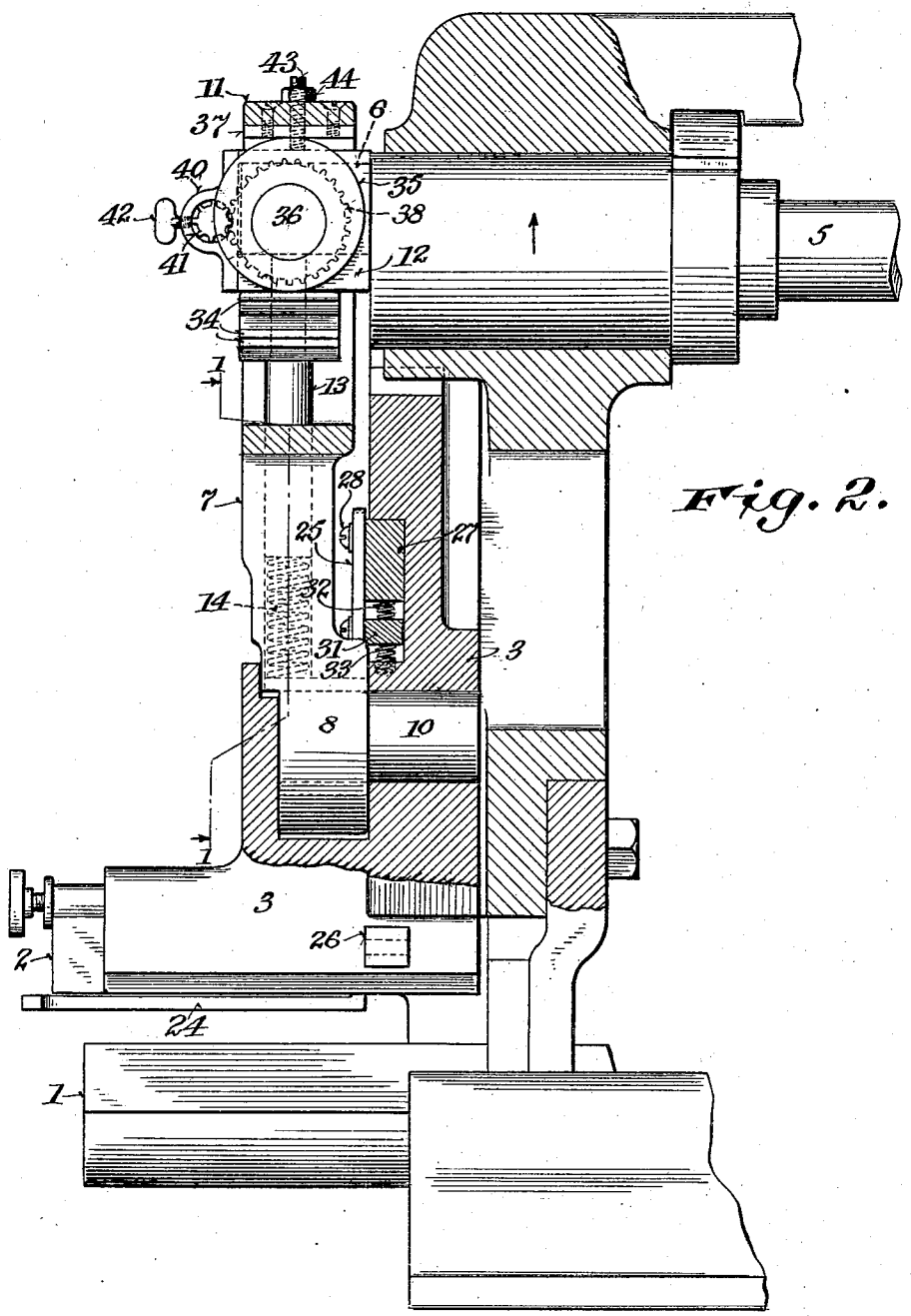

Fig. 2.

Witnesses:
Fred Palm
Chas. L. Goss.

Inventor:
Friedrich Graffenberger
By Flanders Bottum Fawsett & Bottum
Attorneys.

THE COLUMBIA PLANOGRAPH CO., WASHINGTON, D. C.

UNITED STATES PATENT OFFICE.

FRIEDRICH GRAFFENBERGER, OF MILWAUKEE, WISCONSIN, ASSIGNOR TO A. GEO. SCHULZ CO., OF MILWAUKEE, WISCONSIN, A CORPORATION OF WISCONSIN.

PITMAN.

1,188,268. Specification of Letters Patent. Patented June 20, 1916.

Application filed March 1, 1915. Serial No. 11,357.

To all whom it may concern:

Be it known that I, FRIEDRICH GRAFFENBERGER, a citizen of the United States, residing at Milwaukee, in the county of Milwaukee and State of Wisconsin, have invented certain new and useful Improvements in Pitmen, of which the following is a specification, reference being had to the accompanying drawing, forming a part thereof.

This invention relates to pitmen for presses and similar machines, provided with dies or tools, one of which reciprocates toward and from the other.

For the purpose of illustration and explanation it is shown and will be described in connection with parts of a corner staying machine for applying gummed stay strips to the corners of paper boxes.

The main objects of the invention are to provide a longitudinally adjustable and yielding working connection between the pivot heads or pin bearings of a pitman for varying the pressure exerted by a die or tool connected therewith on an opposing die, tool or support, or on work placed between the dies or tools, or for subjecting work of different thickness or properties between the dies or tools to the same or different pressures; to provide such pitmen with means for taking up wear or play which would prevent or interfere with their normal operation; and generally to facilitate the adjustment and improve the construction and operation of pitmen of this class.

The invention consists in the construction, arrangement and combination of parts as hereinafter particularly described and pointed out in the claims.

In the accompanying drawing like characters designate the same parts in both figures.

Figure 1 is a front elevation and partial vertical section approximately indicated by the line 1—1, Fig. 2, of a corner staying machine provided with a pitman embodying the invention; and Fig. 2 is a side elevation and vertical section on the line 2—2, Fig. 1.

The machine in which the pitman is incorporated as shown by the drawing, comprises an anvil or stationary die 1, projecting forwardly from the base of the frame, a reciprocating die 2, carried by a vertically movable cross head 3, guided in ways 4 of the frame, and a horizontal driving shaft 5, provided with an eccentric or crank pin 6 at its front end and provided adjacent thereto with a bearing in said frame.

As thus far described, the machine is of common or well known construction, and no claim is made thereto *per se*.

The die 2 with the cross head 3 to which it is attached, is connected with the eccentric or crank pin 6 by a longitudinally yielding and adjustable pitman 7, which embodies the present invention.

The pitman 7 is formed at its lower end with a pivot head or pin bearing 8, preferably provided with a bushing 9, which is fitted on a wrist pin 10 fast in the cross head 3. At its upper end the pitman is formed with a strap or head 11 having a longitudinal slot or opening in which a pin bearing 12, fitted on the eccentric or crank pin 6 is guided and movable or adjustable lengthwise of the pitman. A longitudinally movable member, preferably consisting of a cylindrical stem 13 fitted and guided in a longitudinal bore of the pitman between the pin bearing 8 at its lower end and the slot or opening in the head 11, has a reduced and squared upper end which fits and is guided in a corresponding opening in the lower side of the adjustable pin bearing 12. Between the lower end of this stem and the wrist pin 10 or bushing 9, a comparatively light spring 14, is interposed.

Adjacent to its lower end the stem 13 is cut away on one side to form a shoulder 15, as shown in Fig. 1, and the pitman is provided on the same side with a yielding latch or dog 16, adapted when thrust inwardly, to engage with the shoulder 15 and to positively lock and hold the stem at a predetermined distance from the pivot head or pivot bearing 8 in the operation of the pitman as hereinafter explained. The latch or dog is preferably fitted and movable in a bushing 17, which is fitted and secured in a transverse opening in one side of the pitman, as shown in Fig. 1. A lever 18, freely fitted in a longitudinal slot or groove in one side of the pitman and fulcrumed therein adjacent to its lower end on a pin 19, parallel with the wrist pin 10, is formed or provided on its outer side with a cam or rounded projection 20, and projects at its upper end through a slot in the lower side of the bushing 17 into an elongated opening or slot in

the latch or dog 16. A spring 21, interposed between this lever and the inner end of the latch or dog, permits the lever to be moved toward the stem 13 when the shoulder 15 on the stem passes below the opposing notch or shoulder of the latch or dog. A spring 22, held in a socket in the pitman 7 and bearing at its outer end against the lever 18, holds the latch or dog 16 normally out of engagement with the stem 13 and the lever against the outer end of the slot in the bushing 17, which serves as a back stop to limit the outward movement of the lever.

An adjustable trip or abutment 23, mounted on one of the ways 4, in the path of the cam or projection 20 of lever 18, is adapted at a certain point in the movement of the pitman toward the anvil or stationary die 1, to thrust the latch or dog 16 inward against the stem 13. Vertically movable guards 24, extending normally a little below and close to the movable die 2 on each side thereof, have upwardly projecting slotted arms 25, which are connected with and guided on cross pieces 26 and 27, formed with or attached to and projecting laterally from the cross head 3 on each side thereof by screws 28 passing loosely through the slots in said arms and threaded in said cross pieces.

The ends of the cross piece 27 are formed with pockets which have upwardly and outwardly inclined inner walls and in which are loosely confined clutch rollers 29, adapted when lifted from the lower ends of the pockets, to engage with inclines 30, attached to the ways 4, and to arrest the downward movement of the pitman 7 before the cam 20 on lever 18 encounters the trip 23.

The two vertical arms 25 of the guards are connected by a cross bar 31, which is movable vertically in a transverse recess in the front side of the cross head 3 below and parallel with the cross piece 27. Light springs 32, seated at their lower ends in sockets in the upper side of the cross bar 31, pass upwardly therefrom loosely through vertical holes in the cross piece 27 below the pockets therein, and are adapted when the guards 24 or either of them encounter an obstruction, such as the finger of an operator, in the downward movement of the die 2, to lift the rollers 29 out of the lower ends of the pockets, so that they will project from the outer open sides of the pockets and engage with the inclines 30, thereby arresting the downward movement of the pitman at a point which will prevent the die from crushing the finger of the operator or injuring work misplaced on the anvil or stationary die 1. The trip or abutment 23 being adjusted to thrust the latch or dog 16 inward when the die 2 in its downward movement has reached a position close to the anvil or stationary die 1, if the path of the guards 24 is unobstructed, the shoulder 15 on the stem 13, by engagement with the latch or dog 16, will cause the movable die to complete its downward stroke and apply the requisite pressure to the work on the anvil or stationary die; but if before the movable die reaches such position, the guards encounter an obstruction such as a finger of the operator or misplaced work, they will lift the clutch rollers 29 into position to engage with the inclines 30, and thus arrest further downward movement of the die 2 with the cross head 3 before the cam or projection 20 reaches the trip 23. In that case the latch or dog 16 will remain in its outer position, as shown in Fig. 1, while the stem 13, actuated by the continued rotation of the crank pin 6, will slip freely downward in the longitudinal bore of the pitman 7, compressing the spring 14. The crank pin is thus permitted to complete its revolution and return to its uppermost position, as shown in Fig. 1, without subjecting the parts connecting it with the movable die to shock or undue strain. The spring 21 compensates for any variation in the throw of the lever 18 due to change in the adjustment of the trip 23 or otherwise, and for any excess movement thereof beyond that required to properly engage the latch or dog with the shoulder 15 without causing it to bind against the stem 13, or subjecting the lever and connected parts to injurious strains. The latch or dog 16, the lever 18 and trip 23 for operating the same, the guards 24, the clutch rollers 29 and the inclines 30 with which they coöperate to arrest the downward movement of the die 2 to prevent injury in case an obstruction is encountered, are substantially covered in my pending application Serial No. 846,240, filed June 20, 1914, and no claim thereto *per se* is made herein. The guards 24 are partially counterbalanced, and their upward movement relative to the cross head 3 is assisted, by one or more light springs 33, interposed between the cross head and the cross bar 31, as shown in Fig. 2.

Provision is made in the pitman for applying an adjustable yielding pressure to the work as follows: The stem 13 is provided below the bearing 12 with a number of bowed leaf springs 34, having central openings loosely fitting the upper squared portion of the stem, the lower spring engaging the shoulder between the squared and cylindrical portions of the stem, and the upper spring serving as a yielding abutment or bearing for two eccentrics 35, which are pivotally mounted in axial alinement with each other on studs 36 projecting from opposite sides of the bearing 12. On their upper sides, diametrically opposite the springs 34, the eccentrics 35 bear against abutments

on the inner side of the upper cross piece of the strap head 11. These abutments preferably consist of hardened steel plates 37, which are detachably fastened by screws or otherwise, to the strap head, as shown, for the purpose of taking up play or wear between the eccentrics and the strap head and maintaining proper adjustment of the pitman. On their inner sides next to the bearing 12, the eccentrics 35 are provided with gears 38, attached thereto concentrically with the studs 36, as shown in Fig. 2. A turning spindle 39, journaled in bearings 40 on the outer or front side of the bearing 12, parallel with the studs 36, is provided at its ends with pinions 41, meshing with the gears 38, for the purpose of simultaneously turning the eccentrics 35 and adjusting the strap head 11 up or down relative to the crank pin 6 and bearing 12, thereby in effect lengthening or shortening the working distance between the pin bearing 8 at the lower end of the pitman, and the crank pin bearing 12 at its upper end, for operating on material of different thicknesses and subjecting the same to like or different pressures.

For operating on material of a given thickness, the adjustment of the strap head 11 upward relative to the crank pin 6 and bearing 12, reduces the pressure, while the adjustment of the strap head downward relative to the crank pin and its bearing, increases the pressure exerted by the movable die 2. The spindle 39 is formed between its bearings 40 with a number of transverse holes to facilitate turning it with a pin. The eccentrics 35 are locked and held in adjusted position by thumb screws 42 threaded in the bearings 40 and adapted by engagement with the spindle 39 to hold the same with the pinions 41 and gears 38 to which the eccentrics are attached, against turning.

To further compensate for lost motion due to wear of the eccentrics 35 and the abutments with which they engage, and to maintain the proper relation between the shoulder 15 on the stem 13 and the latch or dog 16, as well as to avoid subjecting the machine to undue strain resulting from excessive pressure on the work, one or more stop screws 43 are threaded in the strap head 11, and adapted by engagement with the bearing 12 to limit its upward movement in said head independently of the adjustment of the eccentrics 35. These screws are held in adjusted position by lock nuts 44.

In case of wear or distortion of the springs 34 which would permit the shoulder 15 on the stem 13 to pass upwardly some distance above the corresponding shoulder of the latch or dog 16, a condition which would result in lost motion in the downward stroke of the pitman after the latch or dog was thrust inward by the engagement of the cam lever 18 with the trip 23, such lost motion may be taken up by setting the screws 43 downward, till the shoulder 15 is nearly opposite, but slightly above the shoulder of the latch 16, as shown in Fig. 1. Such adjustment of the screws 43 has the effect of inserting a washer of corresponding thickness between the lower spring 34 and the shoulder on the stem 13 against which it rests, and also to prevent the adjustment of the pitman by the eccentrics 35 to increase the effective length of the pitman and thus increase the pressure on work of a given thickness beyond that permitted by said stop screws.

In the operation of the machine, the pitman being adjusted for material of a given thickness and for producing the desired pressure thereon, the work, such as a corner of a paper box, being placed on the anvil or stationary die 1, with a gummed staying strip above it and the shaft 5 being set in motion and rotated in the direction indicated by arrows on the drawing, the pitman 7 descends bodily with the cross head 3 and die 2, the several parts of the pitman maintaining the relative positions in which they are shown in Fig. 1, until the cam projection 20 on the lever 18, engages the trip 23 and thrusts the latch or dog 16 into engagement with the shoulder 15 on the stem 13, when the die 2 is in a position close to the anvil or stationary die 1. After the die 2 is brought into contact with the work on the anvil or stationary die 1, the requisite pressure is exerted upon the work by the crank pin 6 acting on the die 2 through the bearing 12, eccentrics 35, springs 34, stem 13, latch or dog 16, body 7 of the pitman with its pin bearing 8, wrist pin 10 and cross head 3, the springs 34 permitting the die 2, cross head 3, body 7 and stem 13 to yield upwardly as the crank pin 6 passes the lowest point in its circuit. Upon the upward return movement of the pitman, when the projection 20 on the lever 18 clears the trip 23, the latch 16 is retracted to its normal position, as shown in Fig. 1, by the pressure of the spring 22 against said lever.

In case either of the guards 24 in the descent of the die 2, encounters an obstruction such as a finger of the operator or misplaced work on the anvil 1 before the cam projection 20 on the lever 18 engages the trip 23, the clutch rollers 29 will be lifted, as herein-before explained, into position to engage with the stationary inclines 30, and the further downward movement of the cross head 3 with said die, will be arrested, and crushing or bruising the operator's finger or mutilating the misplaced work will be prevented, the pin bearing 12 with the stem 13, moving freely downward in the strap head 11 and body 7 of the pitman against the tension of the light spring 14 as the crank pin

6 completes the downward half of its circuit. With the latter part of the return upward movement of the crank pin 6, the eccentrics 35 by engagement with the plates or abutments 37, or the bearing 12 by engagement with the stop screws 43, return the body 7 of the pitman with the cross head 3 and die 2 to their upper or initial position, as shown in Fig. 1, the stem 13 with the springs 34 being carried back to their original position with the upward movement of the bearing 12 and eccentrics 35 by the expansion of the spring 14.

As shown in the drawing, the eccentrics 35 and the stop screws 43 are adjusted for operation upon work of maximum thickness or with minimum pressure. For thicker work, or for greater pressure, the eccentrics 35 are turned to increase the distance between the pin bearings 8 and 12, and the stop screws 43 are correspondingly set upward in the strap head 11.

Various modifications in the details of construction and arrangement of parts may be made without departure from the principle and scope of the invention as defined in the following claims.

I claim:

1. A pitman having abutments spaced in the direction of its length, two pin bearings one of which is adjustable toward and from the other, and an eccentric pivotally mounted on the adjustable bearing and engaging on opposite sides of its periphery with said abutments.

2. A pitman having abutments spaced in the direction of its length, one of said abutments being yielding lengthwise of the pitman, two pin bearings one of which is adjustable toward and from the other, and an eccentric pivotally mounted on the adjustable bearing in engagement on opposite sides of its periphery with said abutments.

3. A pitman having a slotted head provided with abutments spaced in the direction of its length, a pin bearing guided in said head and adjustable lengthwise thereof, eccentrics pivotally mounted on opposite sides of said bearing and engaging on opposite sides of their peripheries with said abutments, gears connected with the eccentrics concentrically with their pivots, and a turning spindle mounted on said bearing parallel with the eccentric pivots and provided with pinions meshing with said gears.

4. A pitman having a slotted head provided with abutments spaced in the direction of its length, the inner abutment being yielding toward the far end of the pitman, a pin bearing guided in said head and adjustable lengthwise thereof, eccentrics pivotally mounted on opposite sides of said bearing in engagement on opposite sides of their peripheries with said abutments and in axial alinement with each other, gears connected with the eccentrics concentrically with their pivots, and a turning spindle mounted on said bearing and provided with pinions meshing with said gears.

5. A pitman having a slotted head provided with a removable and a longitudinally yielding abutment, a pin bearing guided in and adjustable lengthwise of said head, eccentrics pivotally mounted on opposite sides of said bearing in axial alinement with each other, and engaging on opposite sides of their peripheries with said abutments, gears connected with the eccentrics coaxially with their pivots, and a turning spindle mounted on said bearing and provided with pinions meshing with said gears.

6. A pitman having a slotted head, a pin bearing guided in and adjustable lengthwise of said head, a fixed and a yielding abutment on opposite sides of said bearing, an eccentric pivotally mounted on said bearing in engagement with said abutments, and an adjustable stop between said bearing and the adjacent end of said head.

7. A pitman having a slotted head provided with opposing fixed and yielding abutments, a pin bearing guided in and adjustable lengthwise of the head between said abutments, eccentrics pivotally mounted on opposite sides of the bearing in axial alinement with each other and engaging on opposite sides of their peripheries with said abutments, gears connected with the eccentrics concentrically with their pivots, a turning spindle mounted on said bearing and provided with pinions meshing with the gears, and an adjustable stop between said bearing and the adjacent end of the pitman.

8. A pitman having a fixed pin bearing at one end and a slotted head at the other end, a pin bearing guided in and adjustable lengthwise of said head, a longitudinally movable member guided in the pitman between said bearings and provided with a yielding abutment, means for locking the movable member in fixed relation to the fixed pin bearing, and an eccentric pivotally mounted on the adjustable pin bearing between said yielding abutment and the opposite end of the slotted head.

9. A pitman having a fixed pin bearing at one end and a longitudinally slotted head at the other end, a pin bearing guided in and adjustable lengthwise of the slotted head, a longitudinally movable member guided in the pitman between said bearings and provided in the slotted head with a spring abutment, a spring interposed between said movable member and the fixed pin bearing, a latch for locking the movable member in fixed and working relation to the fixed pin bearing, eccentrics pivotally mounted on opposite sides of the adjustable pin bearing in axial alinement with each other between the spring abutment and the

opposite end of the slotted head, gears attached to the eccentrics concentrically with their pivots, and a turning spindle mounted on the adjustable pin bearing and provided with pinions meshing with the gears.

10. A pitman having a fixed pin bearing at one end and a slotted head at the other end, a pin bearing guided in and movable lengthwise of said head, a longitudinally movable stem guided in the pitman between said bearings and provided adjacent to the movable bearing with a spring abutment, a spring interposed between said stem and the fixed bearing and tending to separate and hold said bearings in working relation to each other, a latch for locking said stem in working position with relation to the pitman, eccentrics pivotally mounted on opposite sides of the movable bearing between the spring abutment and the opposite end of the slotted head, gears attached to the eccentrics concentrically with their pivots, a turning spindle mounted on the movable bearing and provided with pinions meshing with said gears, and means for locking said spindle against rotation.

In witness whereof I hereto affix my signature in presence of two witnesses.

FRIEDRICH GRAFFENBERGER.

Witnesses:
CHAS. L. GOSS,
CHAS. EGGERS.

Copies of this patent may be obtained for five cents each, by addressing the "Commissioner of Patents, Washington, D. C."