Jan. 26, 1937. O. CICCARELLI 2,068,844

RADIO CONSTRUCTION

Filed Oct. 12, 1935 3 Sheets-Sheet 1

Fig. 1.

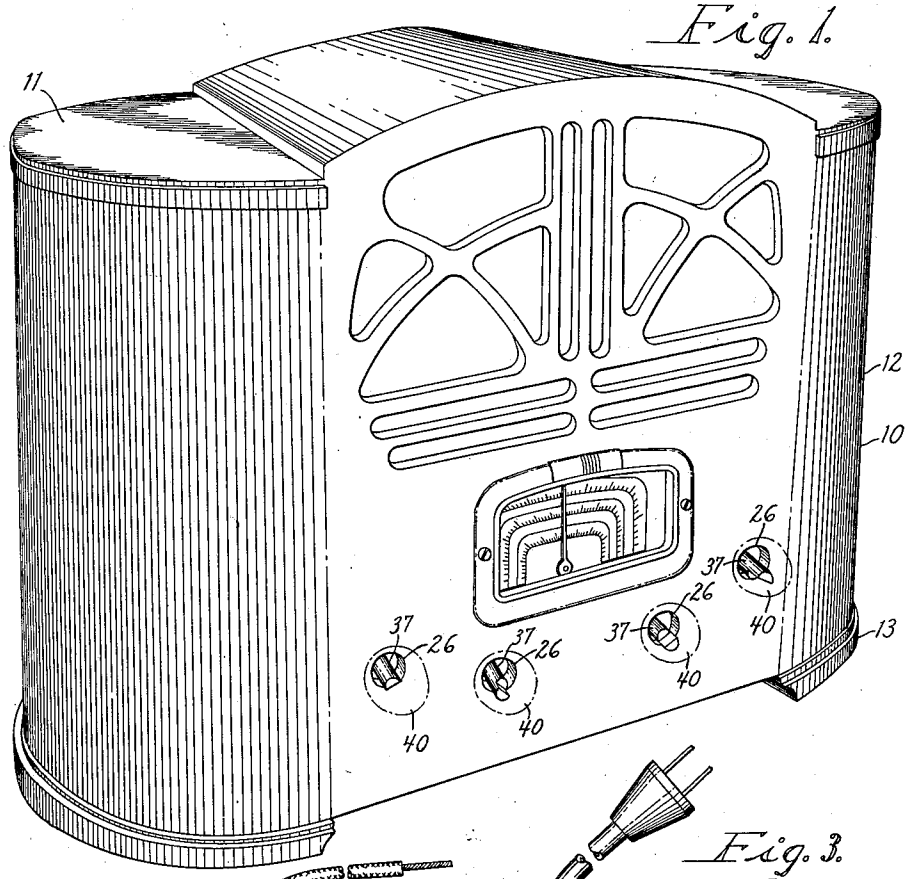

Fig. 3.

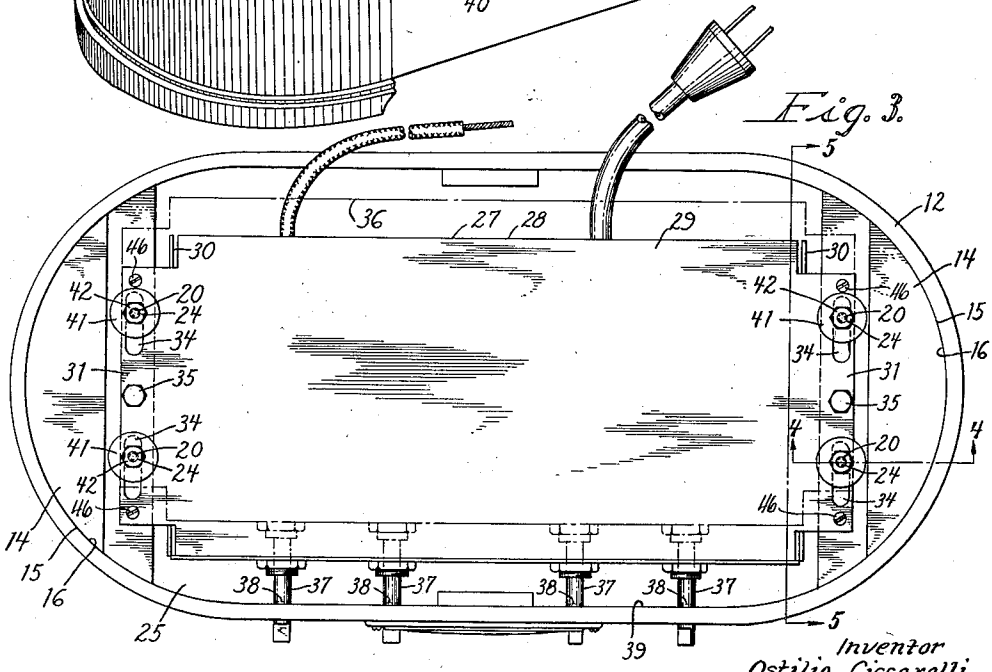

Inventor
Ostilio Ciccarelli
By Seymour, Earle & Nichols
Attorneys

Jan. 26, 1937. O. CICCARELLI 2,068,844

RADIO CONSTRUCTION

Filed Oct. 12, 1935 3 Sheets-Sheet 2

Fig. 2.

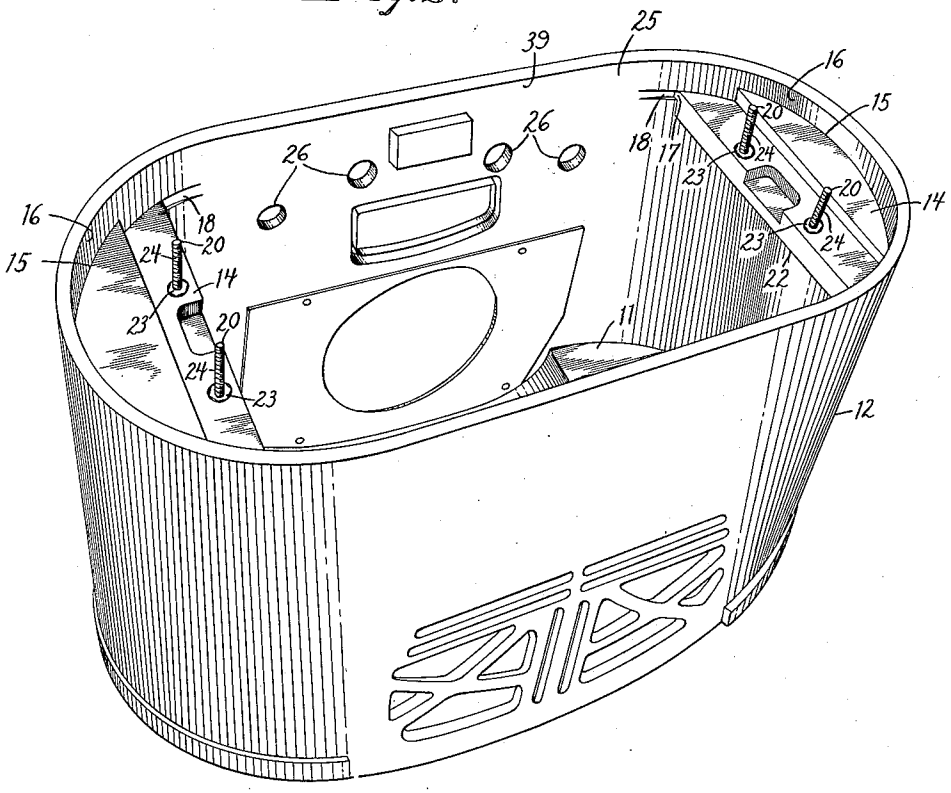

Fig. 6.

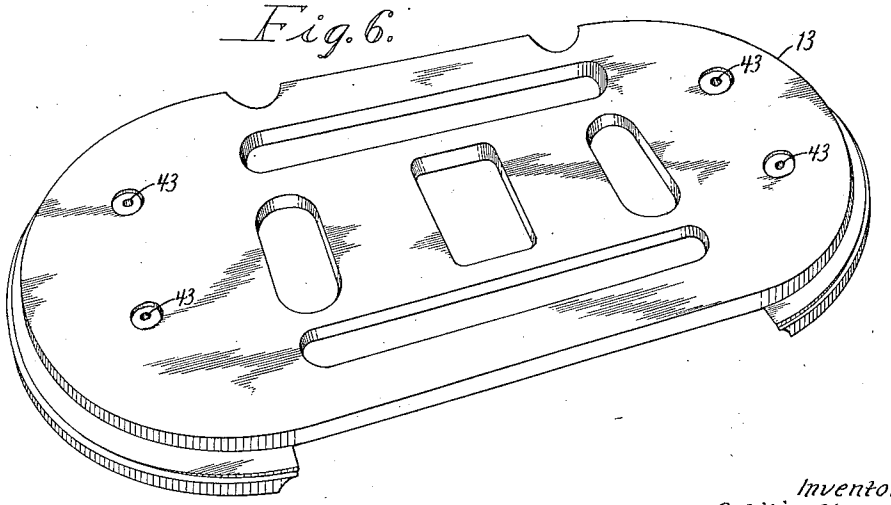

Inventor
Ostilio Ciccarelli
By Seymour, Earle & Nichols
Attorneys

Jan. 26, 1937. O. CICCARELLI 2,068,844

RADIO CONSTRUCTION

Filed Oct. 12, 1935 3 Sheets-Sheet 3

Fig. 5.

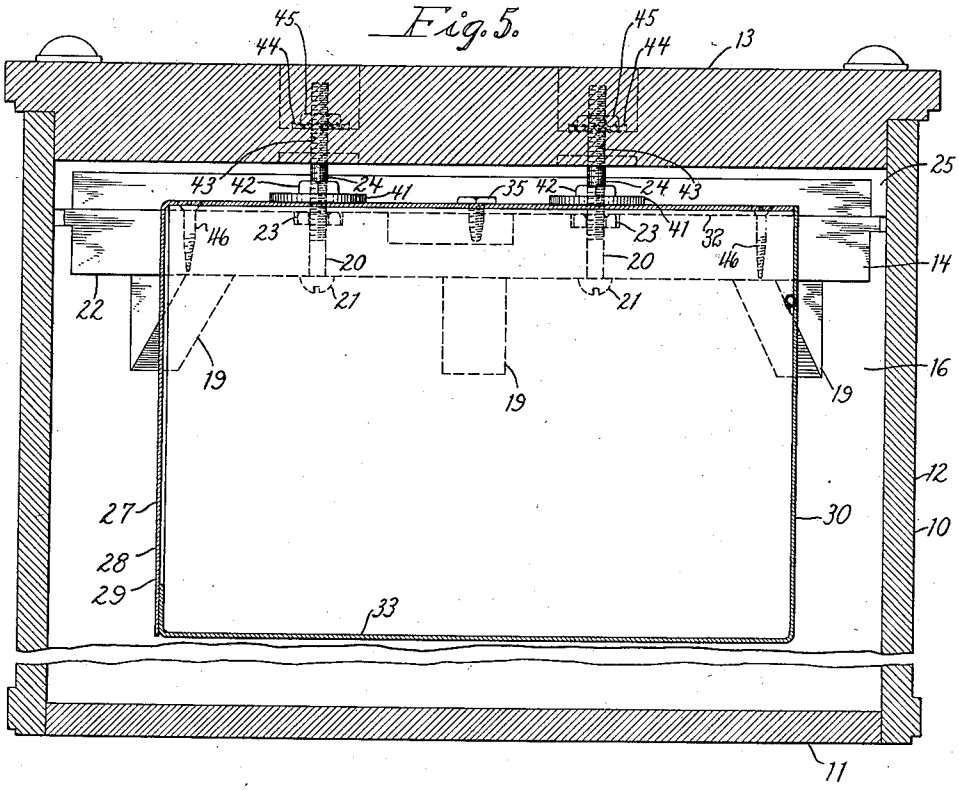

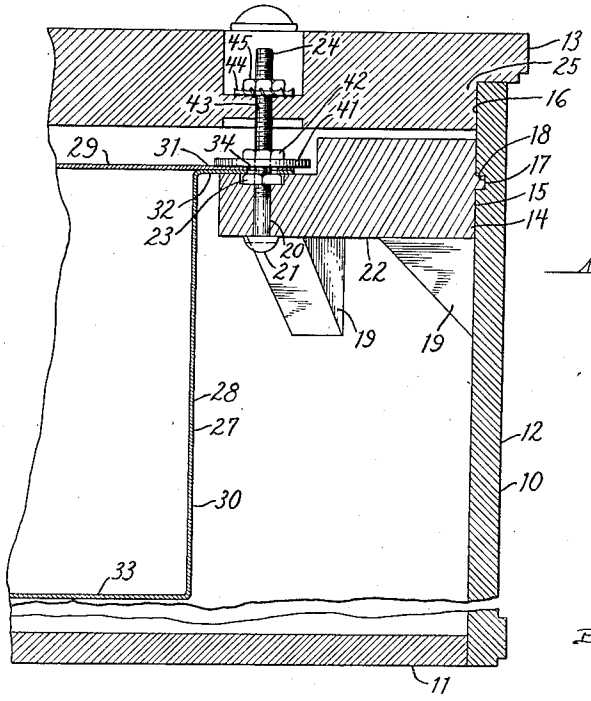

Fig. 4.

Inventor
Ostilio Ciccarelli
By Seymour, Earle & Michels
Attorneys

Patented Jan. 26, 1937 2,068,844

UNITED STATES PATENT OFFICE

2,063,844

RADIO CONSTRUCTION

Ostilio Ciccarelli, Bristol, Conn., assignor to The E. Ingraham Company, Bristol, Conn., a corporation of Connecticut

Application October 12, 1935, Serial No. 44,729

2 Claims. (Cl. 312—7)

This invention relates to radio constructions, and more particularly to modes of inserting the radio chassis in the radio cabinet.

One object of this invention is to provide an improved radio construction in which the radio chassis is inserted into the bottom of the radio and secured therein.

With the above and other objects in view, this invention includes all improvements over the prior art which are disclosed in this application.

In the accompanying drawings, in which one way of carrying out the invention is shown for illustrative purposes:

Fig. 1 is a perspective view of a radio constructed in accordance with this invention;

Fig. 2 is a bottom perspective view of the radio cabinet in upside-down position and prior to the insertion of the radio chassis therein;

Fig. 3 is a bottom plan view of the radio cabinet with the radio chassis secured therein;

Fig. 4 is a sectional view on line 4—4 of Fig. 3;

Fig. 5 is a sectional view on line 5—5 of Fig. 3; and

Fig. 6 is a perspective view of the support or base-plate.

In the description and claims, the various parts are identified by specific names for convenience, but they are intended to be as generic in their application as the prior art will permit.

Referring to the drawings, the radio cabinet or case 10 consists of a top 11 and a body 12 that is continuous and in the form of a flattened ellipse, and a support or base or bottom-plate 13, the latter being detachable.

Inside the cabinet 10, adjacent the opposite bottom ends of the cabinet, are secured two brackets 14. Each bracket has a curved face 15 shaped to fit the inside curved surface 16 of the case, and a curved bead 17 projecting from the face 15 and fitting in a curved slot 18 in the inner face 16. Each bracket 14 is formed of wood and is glued in place and glued upon the wooden blocks 19, which latter also are glued to the inner surface 16 of the cabinet 10. Bolts 20 have heads 21 engaged against the under-face 22 of the bracket 14 and extend up through the bracket, and are secured firmly thereto by the nuts 23 with the free threaded ends 24 of the bolts extending up through and beyond the large bottom opening 25 of the cabinet 10. The cabinet 10 also has shaft-holes or openings 26.

The radio chassis 27 includes a box 28 formed of two sheet-metal parts 29 and 30, the part 29 being integral with the projection or flange 31, and the part 30 being integral with the projection or flange 32, at each end of the radio chassis. The box 28 has certain radio parts (not shown) secured in the interior thereof, and other radio parts (not shown) secured to and extending below the bottom 33. The flanges 31 and 32 have elongated slots 34 therethrough. Each pair of flanges 31, 32 are secured together by any suitable means such, for example, as by the bolt-member 35.

In assembling the chassis in the cabinet, the cabinet is placed in upside-down position, such as shown in Fig. 2, and the chassis is lowered into the cabinet as shown in Figs. 3, 4 and 5, to bring the slots 34 over the bolt-ends 24, with the rear face of the chassis occupying some such position as indicated by the broken line 36 (Fig. 3), and with the shafts 37 having their extreme forward ends indicated in broken lines at 38, spaced somewhat back away from the inside front face 39 of the cabinet to provide suitable clearance for the chassis as it is lowered into the cabinet. The chassis is then slid forward with the flange 31, 32 moving along the brackets 14, to project the shafts 37 the desired distance through the shaft-openings 26 in the front of the cabinet.

Washers 41 and nuts 42 are applied to the threaded bolt-ends 24 and wood screws 46 are screwed through the flanges 31 and 32 into the wood brackets 14, to firmly secure the flanges of the chassis to the brackets. The base or bottom-plate 13 is then inserted in the base-opening 25 of the cabinet, with the threaded bolt-ends 24 extending up through the holes 43 in the base 13. Lock-washers 44 and nuts 45 are then applied to the bolt-ends 24 to securely attach the base 13 in place, whereupon the assembled radio may be inverted to its normal position shown in Fig. 1. Suitable knobs, such as indicated in broken lines at 40, may be applied to the ends of shafts 37 for operating the radio.

The invention may be carried out in other specific ways than that herein set forth without departing from the spirit and essential characteristics of the invention, and the present embodiment is therefore to be considered in all respects as illustrative and not restrictive, and all changes coming within the meaning and equivalency range of the appended claims are intended to be embraced therein.

I claim:

1. A radio construction comprising: a hollow radio cabinet having non-separable top, front, end and rear walls and shaft-openings in its front wall and the bottom being open and supporting-brackets on the inside of the opposite

end walls of the cabinet adjacent the bottom thereof; and a radio chassis having shafts projecting from its front and insertable into said cabinet through said open bottom and adapted to pass between said brackets and having flanges engageable against said brackets and slidable transversely of said insertion movement to project said shafts through said shaft-openings and said flanges being adapted to be secured to said brackets.

2. A radio construction comprising: a hollow radio cabinet having non-separable top, front, end and rear walls and shaft openings in its front wall and the bottom being open; supporting-brackets on the inside of the opposite end walls of the cabinet adjacent the bottom thereof; bolts secured to said brackets and having threaded ends extending from said brackets toward the plane of the bottom edge of the cabinet; a radio chassis having shafts projecting from its front and insertable into said cabinet through said open bottom and adapted to pass between said brackets and having flanges engageable with said brackets, and said chassis movable transversely of said insertion movement to project said shafts through said shaft-openings; a base-plate engageable over said open bottom and over said bolts; and means threaded on said bolts and securing said flanges and said base-plate to said brackets.

OSTILIO CICCARELLI.