A. E. RHOADES.

PAWL AND RATCHET MECHANISM.

APPLICATION FILED JAN. 13, 1919.

1,347,661.

Patented July 27, 1920.

2 SHEETS—SHEET 1.

Fig. 1.

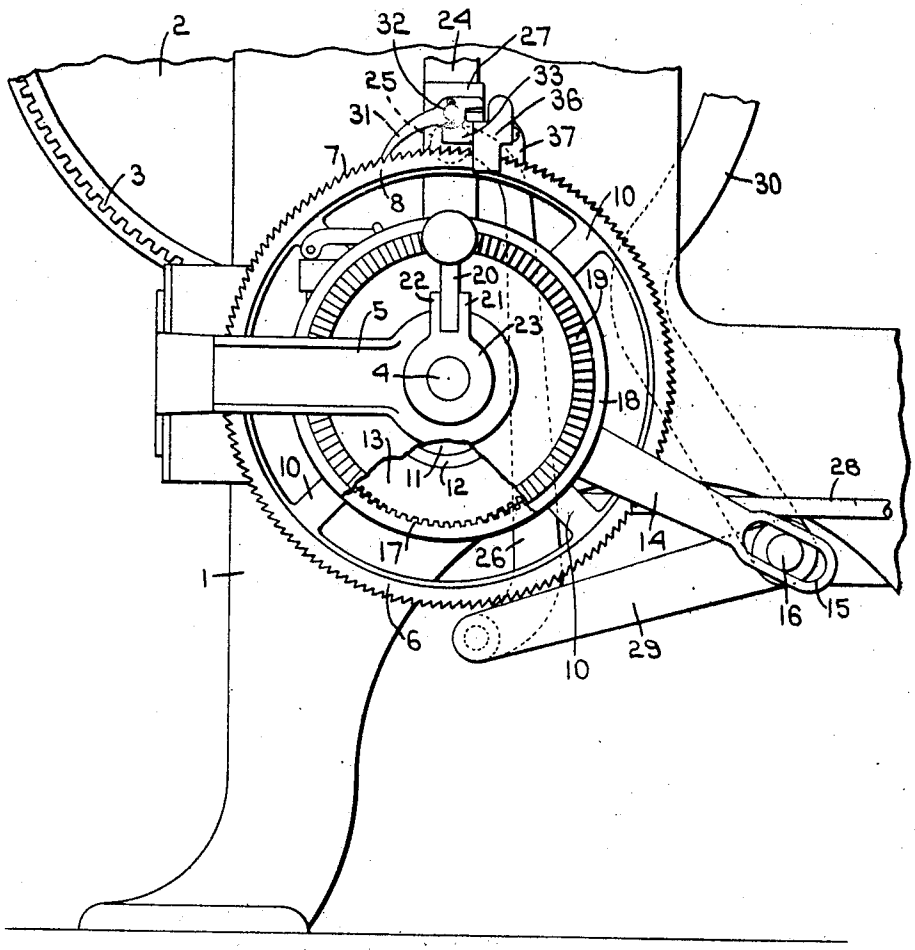

Fig. 2.

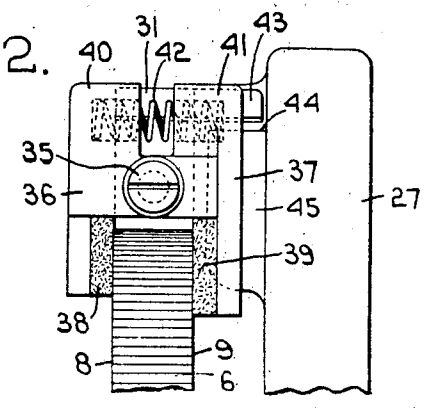

Inventor.
Alonzo E. Rhoades
by Heard Smith & Tennant
Attys.

A. E. RHOADES.

PAWL AND RATCHET MECHANISM.

APPLICATION FILED JAN. 13, 1919.

1,347,661. Patented July 27, 1920.

2 SHEETS—SHEET 2.

Fig. 3.

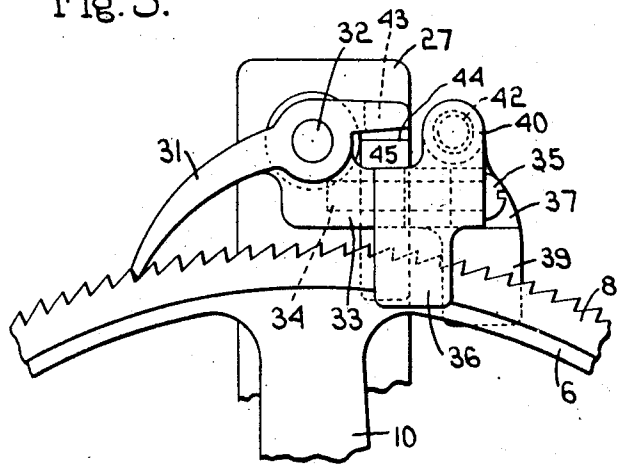

Fig. 4.

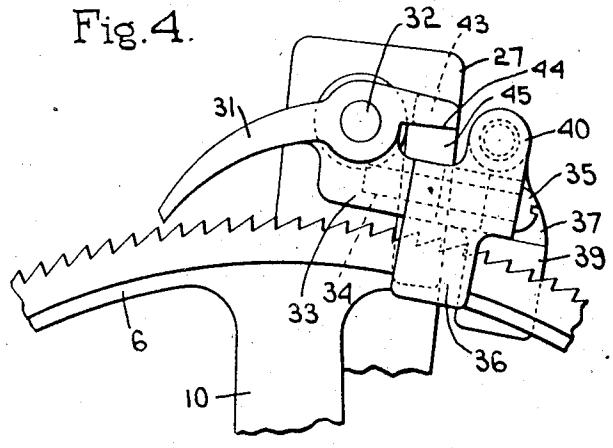

Inventor.
Alonzo E. Rhoades
by Heard Smith & Tennant
Attys.

UNITED STATES PATENT OFFICE.

ALONZO E. RHOADES, OF HOPEDALE, MASSACHUSETTS, ASSIGNOR TO DRAPER CORPORATION, OF HOPEDALE, MASSACHUSETTS, A CORPORATION OF MAINE.

PAWL-AND-RATCHET MECHANISM.

1,347,661. Specification of Letters Patent. Patented July 27, 1920.

Application filed January 13, 1919. Serial No. 270,795.

To all whom it may concern:

Be it known that I, ALONZO E. RHOADES, a citizen of the United States, and resident of Hopedale, county of Worcester, State of Massachusetts, have invented Improvements in Pawl-and-Ratchet Mechanisms, of which the following description, in connection with the accompanying drawing, is a specification, like characters on the drawing representing like parts.

This invention relates to improvements in pawl and ratchet mechanisms and the object thereof is to provide an improved pawl and ratchet mechanism, in which the pawl will, upon its forward movement, be forced positively into engagement with the ratchet and upon its retrograde movement will be removed from engagement with the ratchet and retained out of contact with the ratchet until the next forward movement of the pawl.

The particular embodiment of the invention is disclosed herein as applied to the type of let-off mechanism illustrated in patents to Roper No. 744,941, November 24, 1903 and No. 843,181, February 5, 1907, but it will be understood that the improvement disclosed herein may be applied to other forms of let-off mechanism or may be incorporated in other devices in which pawl and ratchet mechanisms of the type herein disclosed are applicable and desirable.

Other objects and features of the invention will be more fully disclosed in the following description and the accompanying drawings and will be pointed out in the annexed claims.

In the drawings;

Figure 1 is a side elevation of a portion of a loom provided with let-off mechanism embodying my invention,

Fig. 2 is an enlarged detail view of a portion of the ratchet of the let-off mechanism, showing the improved pawl controlling mechanism embodying my invention applied thereto,

Fig. 3 is an enlarged detail elevation showing my improved pawl controlling mechanism operating to force the pawl into engagement with the ratchet.

Fig. 4 is a similar view illustrating the pawl controlling mechanism acting to withdraw the pawl out of engagement with the ratchet and to retain the same out of contact therewith during the retrograde movement of the pawl.

The present invention is illustrated herein as applied to a loom comprising the usual frame 1 having a warp beam 2 provided with an attached gear 3 which is rotated by a gear, not shown, mounted upon a shaft 4 which is journaled in the loom frame and in a bracket 5 secured to and projecting beyond the side of said frame. The shaft 4 and consequently the warp beam 2 may be rotated through the same general type of mechanism as that illustrated in Patent No. 744,941 aforesaid, except for the pawl and ratchet mechanism which constitutes the present invention.

The mechanism disclosed in the drawings comprises a cylindrical ratchet member 6, rotatably mounted upon the shaft 4, having at its periphery ratchet teeth 7 and adjacent said ratchet teeth smooth end faces 8 and 9, the purpose of which will be more fully explained. The cylindrical ratchet member 6 may be in the form of a spider having arms 10 leading to a hub which carries an eccentric 11 upon which is mounted the hub 12 of a gear 13. The gear 13 is prevented from rotation by a cross head which is not shown in the present drawings but may be similar to that illustrated in the drawings of Patent No. 744,941 above referred to, said cross head being mounted upon a concentric sleeve on the shaft 4 and having guideways embracing studs projecting laterally from the gear 13. The position of the cross head is maintained by an arm 14 having a slotted end 15 embracing a rock shaft 16 suitably mounted in bearings in the loom frame.

The gear 13 engages an internal gear 17 of larger diameter upon the interior of a drum 18 which is rotatably mounted upon the shaft 4. As the gear 17 has a greater number of teeth than the gear 13 the action of the eccentric 11 will cause a slow rotation of the internal gear 17 and the drum 18. The drum 18 is provided with an annular series of ratchet teeth 19 which are engaged by a suitable dog pivotally mounted upon a member which is secured to the shaft 4, so that when the drum 18 is rotated it will cause the rotation of the shaft 4 and consequently of the warp beam.

The dog which engages the ratchet 19 de-

sirably may be removed from engagement with said ratchet by an operating hand lever 20 mounted in suitable bosses 21, 22 extending upwardly from a hub 23 which is also secured to the shaft 4. By reason of this construction the lever 20 may be operated first to release the dog from engagement with the ratchet 19 and then to rotate the shaft 4 independently of the pawl and ratchet mechanism which normally rotates the drum, thus enabling the operator to manipulate the warp beam as desired for the purpose of tightening or loosening the tension upon the warp preparatory to starting the loom.

The rotation of the warp beam is controlled during the normal operation of the loom by the reciprocation of the whip roll which is due to the variation in tension of the warp which runs over it, as is common in machines of this type and as disclosed in the Roper patents aforesaid. The oscillation of the usual arm which carries the whip roll imparts an oscillatory movement to a compound pawl carrier of the type shown in the patents aforesaid which comprises an upper member 24 pivotally mounted upon the loom side and a lower member which is pivoted upon the shaft 4. The upper member 24 has a groove which receives one end of a cross head 25 upon a radius bar 26. The opposite end of the cross head engages a similar groove in the member 27 which is mounted upon the shaft 4 and is oscillated by a rod 28 connected to the rock shaft of the loom or to the lay sword.

In order to provide for the proper rotation of the ratchet member 6 and consequently of the warp beam to maintain a uniform tension upon the warp as the warp beam decreases in size the radius bar 26 is connected at its lower end to an arm 29 which extends from and is rigidly connected to the rock shaft 16. Another arm 30 rigidly secured to the rock shaft 16 extends upwardly and terminates in a member adapted to engage the warp upon the beam. In the operation of the machine as the diameter of the warp beam decreases the arm 30 moves gradually toward the axis of the warp beam thereby causing the other arm 29 which is connected to the rock shaft to descend and draw down with it the radius bar 26. The cross head 25 at the end of the radius bar is thereby moved downwardly in the slots in the members 24 and 27 of the compound pawl carrier so that the pawl carrier is given increased range of movement in proportion to the decrease in diameter of the warp beam.

The mechanism thus described may be and is of the general form illustrated in the Roper patents referred to and in the usual commercial machines embodying the improvements set forth in said patents. In those machines, the pawl which is carried by the compound pawl carrier, is in the form of a pivoted dog which is pressed down upon the teeth of the ratchet by a spring in order to insure proper engagement with said teeth upon each reciprocation of the pawl. The wear occasioned by the dragging of the pawl over the teeth of the ratchet during its retrograde movement in time wears down or rounds the points of the teeth so that the pawl is liable to slip over the tooth in its forward movement and thus cause an improper rotation of the warp beam. This wear also eventually varies the effective length and operativeness of the pawl.

The present invention contemplates the provision of means which will act to positively force the pawl into engagement with the teeth of the ratchet during the forward movement of the pawl and which will also act positively to remove the pawl from engagement with the teeth of the ratchet and to retain it out of contact therewith during the retrograde movement of the pawl, thus avoiding any wear upon the ratchet or pawl.

The preferred embodiment of the invention which is disclosed herein comprises a pawl 31 pivotally mounted upon a stud 32 projecting laterally from the member 27 of the compound pawl carrier. The pawl is provided with an extension 33 which desirably may have a screw threaded aperture 34 to receive a screw 35 forming a pivot for a pair of gripping members 36 and 37 which are provided with faces 38, 39 of leather or other frictional material adapted to engage the end faces 8, 9 of the ratchet member 6, resilient means being provided for forcing the frictional faces 38, 39 of the gripping members into engagement with the faces 8, 9 of the ratchet member.

In the preferred embodiment of the invention illustrated in the accompanying drawings the gripping members 36, 37 are provided with upwardly extending bosses 40, 41 having oppositely disposed bores which receive the ends of a compression spring 42. The spring 42 therefore acts at all times to force the frictional faces 38, 39 into engagement with the smooth end faces 8 and 9 upon the ratchet member 6.

In the operation of the machine the pawl carrier is reciprocated and controlled in the usual manner, as disclosed in the patents above mentioned, but in the machine embodying my invention the frictional engagement between the faces 38, 39 of the gripping members 36, 37 and the faces 8, 9 upon the ratchet member as the pawl carrier starts on its forward movement causes the pawl to be rocked about its pivot and its end forced positively into engagement

with one of the teeth of the ratchet 7 so that further movement of the compound pawl carrier will cause a positive rotation of the ratchet, imparting through the mechanism described a rotation to the warp beam 2. Upon the retrograde movement of the compound pawl carrier the gripping members 36, 37 first act to depress the extension 33 of the pawl, thereby raising the pawl 31 out of engagement with the teeth of the ratchet and as the frictional engagement of said members with the faces 8, 9 of the ratchet is maintained during the retrograde movement of the pawl carrier, the pawl 31 will be retained out of engagement with the teeth 7 of the ratchet during the entire movement and also until the pawl carrier again resumes its forward movement.

In order to prevent the pawl from being rocked by the frictional engagement of the gripping members 36, 37 with the faces 8 and 9 of the ratchet member so far as to cause the hinged portions of said gripping members to strike the teeth 7 of the ratchet the pawl 13 is provided with a lateral extension or tail 43 which overlies and is adapted to engage, the shouldered upper end 44 of a boss 45 projecting from the side of the lower member 27 of the compound pawl carrier.

By reason of this construction therefore the pawl is at all times removed from engagement with the teeth of the ratchet except during the time in which it engages said teeth during the forward movement to rotate the warp beam. All wear upon the pawl and ratchet is eliminated and the accuracy of the rotation of the warp beam insured.

It will be understood that the particular embodiment of the invention disclosed herein is of an illustrative character and that various modifications in form, construction and arrangement of parts may be employed within the spirit and scope of my invention. It will also be understood that the mechanism for removing the pawl from engagement with the ratchet during the retrograde movement of the pawl may be utilized in any device in which the advantages of the aforesaid mechanism may be useful and desirable.

Having thus described my invention, what I claim as new and desire to secure by Letters Patent is;

1. Pawl and ratchet driving mechanism comprising a ratchet having parallel smooth faces adjacent to the end of the ratchet teeth, a pawl actuating arm and means for reciprocating the same, a pawl pivotally mounted upon said actuating arm positioned to engage said ratchet and provided with an extension having pivotally mounted thereon oppositely disposed members having frictional surfaces engaging the smooth faces of said ratchet and resilient means for forcing said frictional surfaces against said smooth faces.

2. Pawl and ratchet driving mechanism comprising a cylindrical member having peripheral ratchet teeth and presenting end faces adjacent to said teeth, a pawl actuating arm and means for reciprocating the same, a pawl pivotally mounted upon said actuating arm and provided with an extension having pivotally mounted thereupon oppositely disposed members having frictional surfaces engaging the end faces of said cylindrical ratchet member, bosses extending upwardly from said pivotally mounted members and a helical spring interposed between said bosses acting to press the frictional surfaces against the end faces of said cylindrical ratchet member.

3. Pawl and ratchet mechanism comprising a member having a ratchet face, a smooth face adjacent said ratchet and extending at right angles thereto, a pawl actuating member, a pawl pivotally mounted thereon having an extension beyond said pivot and frictional means carried by said extension engaging said smooth face operable upon the forward movement of said pawl actuating member to force the pawl into engagement with said ratchet and upon retrograde movement to remove the pawl from engagement with said ratchet and to retain it out of engagement with the ratchet until the next forward movement of the pawl actuating member.

4. Pawl and ratchet driving mechanism comprising a member having a ratchet and parallel faces adjacent said ratchet and extending at right angles thereto, a pawl actuating member, a pawl pivotally mounted thereon having an extension beyond said pivot, frictional members pivotally mounted upon said extension engaging said parallel faces operable upon the forward movement of said pawl actuating member to force the pawl into engagement with said ratchet and upon retrograde movement to remove the pawl from engagement with said ratchet to retain it out of engagement with the ratchet until the next forward movement of the pawl actuating member.

In testimony whereof I have signed my name to this specification.

ALONZO E. RHOADES.